BODY CONSTRUCTION CHARACTERISTICS

Definitions of Steels used in the Chrysler Sebring Convertible:
MS 66 - Represents an uncoated Hot Rolled Steel Sheet used mainly for interior braces and reinforcements.
MS 67 - Represents an uncoated Cold Rolled Sheet structural steel used in areas where structural integrity is critical. EG., the type of steel used for the “A” pillar.
MS 264 - Represents an uncoated high strength low alloy (HSLA) steel used in applications where structural integrity is critical.
MS 6000-44A - Low carbon, hot dipped galvanneal (or EGA) with 45 g/m² minimum coating weight on both sides.
- Most common Sheet Steel product used by Chrysler.
MS 6000-44VA - 50 ksi min. yield strength, HSLA, killed steel, with 44 g/m² minimum coating weight on both sides.
- Most common high strength coated steel product used by Chrysler.
MS82-1228 - Represent a coated high strength low alloy (HSLA) hot or cold rolled sheet steel used in applications where structural integrity is critical.

PARTIAL LIST OF STEEL APPLICATIONS
Galvannealed Steel

Body Side Aperture
Cowl Plenum Panel
Cowl Side Panel
Dash Panel
Front Door - Inner Panel
Front Door - Outer Panel
Front Fender
Front Floor Pan
Front Hinge Pillar
Front Rail
Front Strut Mounting Tower
Front Wheelhouse (Front and Rear)
Lower Radiator Crossmember
Rear Door - Inner Panel
Rear Door - Outer Panel
Rear Floor Pan
Rear Floor Pan Front Crossmember
Rear Floor Pan Side Rail
Rear Suspension Crossmember
Rear Quarter Panel - Inner
Rear Quarter Panel - Outer
Rear Wheelhouse - Inner
Roof Panel
UpperLoad Path Beam
Upper Radiator Crossmember

Back to Index

BODY CONSTRUCTION CHARACTERISTICS

The following measures have been implemented in order to provide maximum corrosion prevention and protection.

1. The use of galvannealed coatings throughout the body structure.
2. Ecoat is used on the complete body in all instances.
3. Body sealing.
4. Stone-chipping resistant primer application.
5. Underbody corrosion prevention.

Back to Index

CHRYSLER SEBRING CONVERTIBLE
COMPONENT CHART

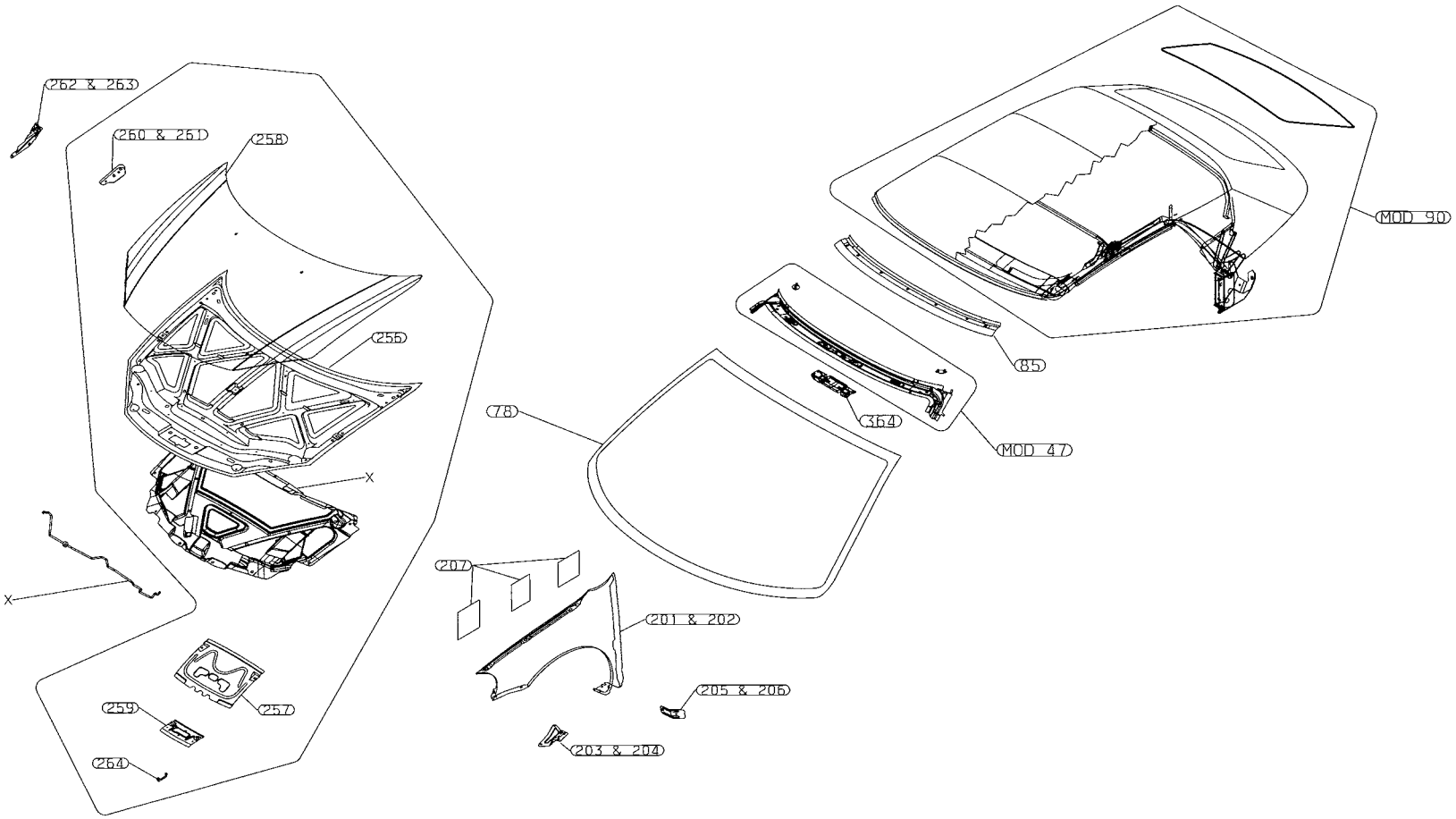

– ULTRA-HIGH STRENGTH STEEL (UH)

– HIGH STRENGTH STEEL (HS)

Back to Index

CHRYSLER SEBRING CONVERTIBLE
COMPONENT CHART

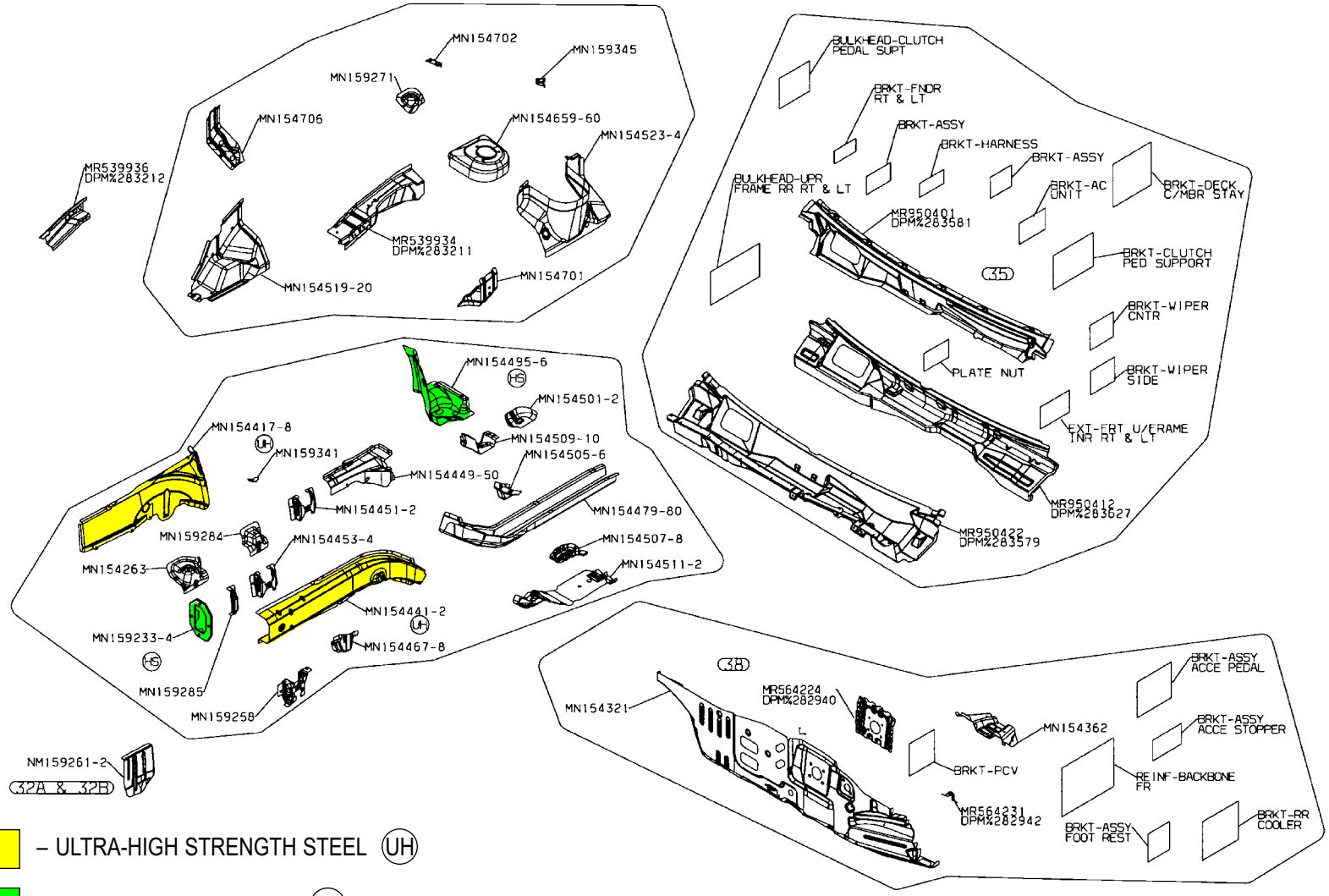

– ULTRA-HIGH STRENGTH STEEL (UH)

– HIGH STRENGTH STEEL (HS)

Back to Index

CHRYSLER SEBRING CONVERTIBLE
COMPONENT CHART

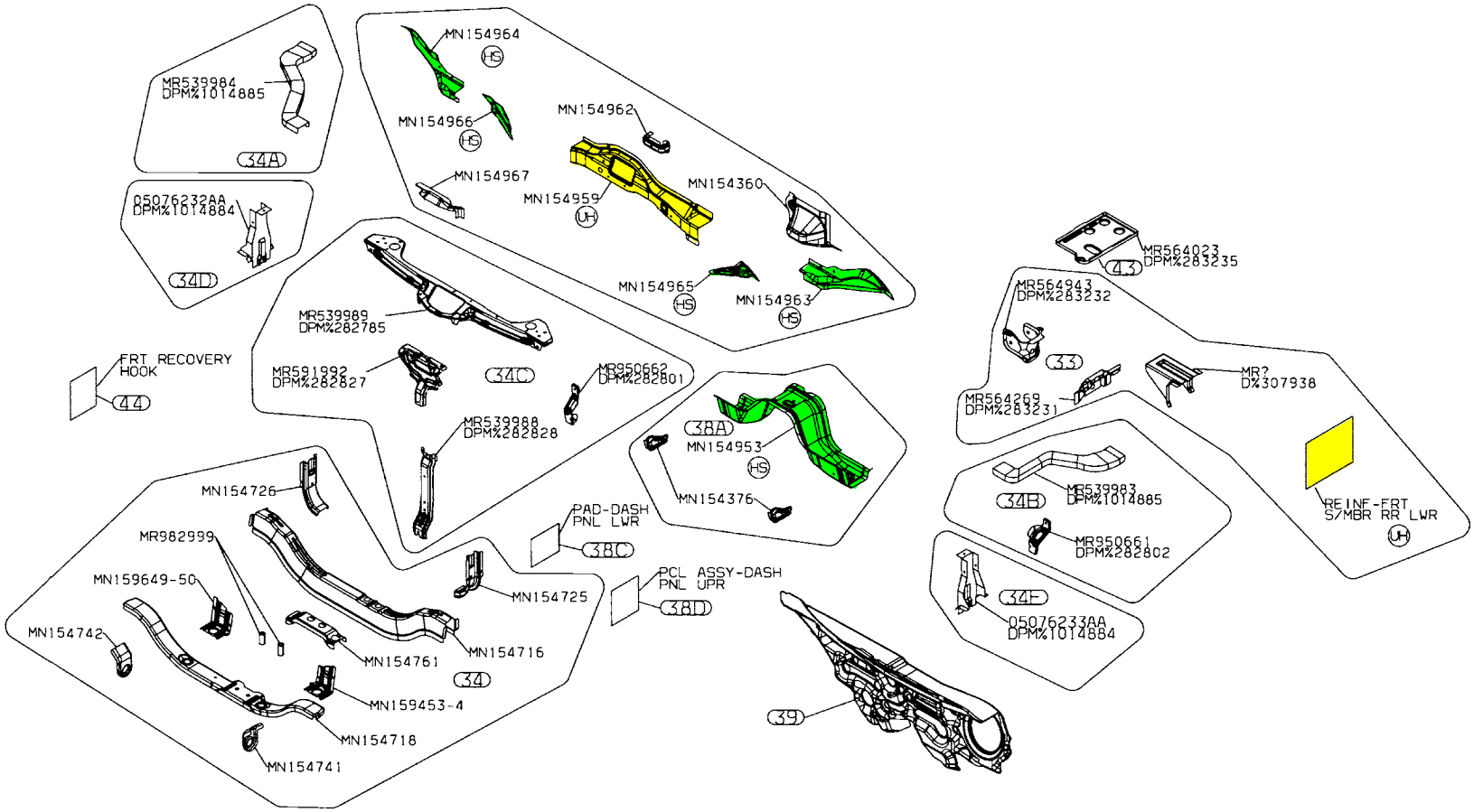

– ULTRA-HIGH STRENGTH STEEL (UH)

– HIGH STRENGTH STEEL (HS)

Back to Index

CHRYSLER SEBRING CONVERTIBLE
COMPONENT CHART

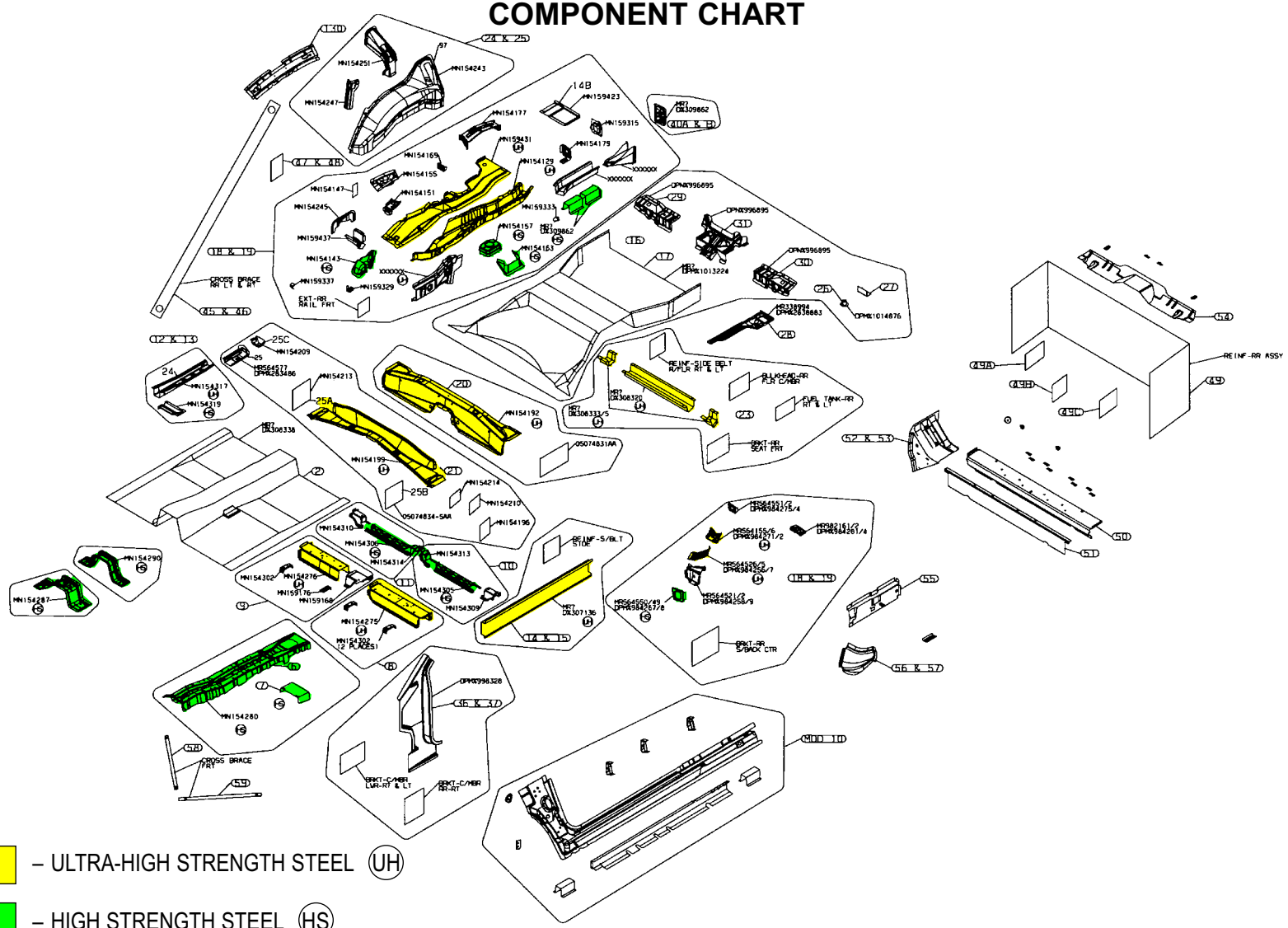

– ULTRA-HIGH STRENGTH STEEL (UH)

– HIGH STRENGTH STEEL (HS)

Back to Index

CHRYSLER SEBRING CONVERTIBLE
COMPONENT CHART

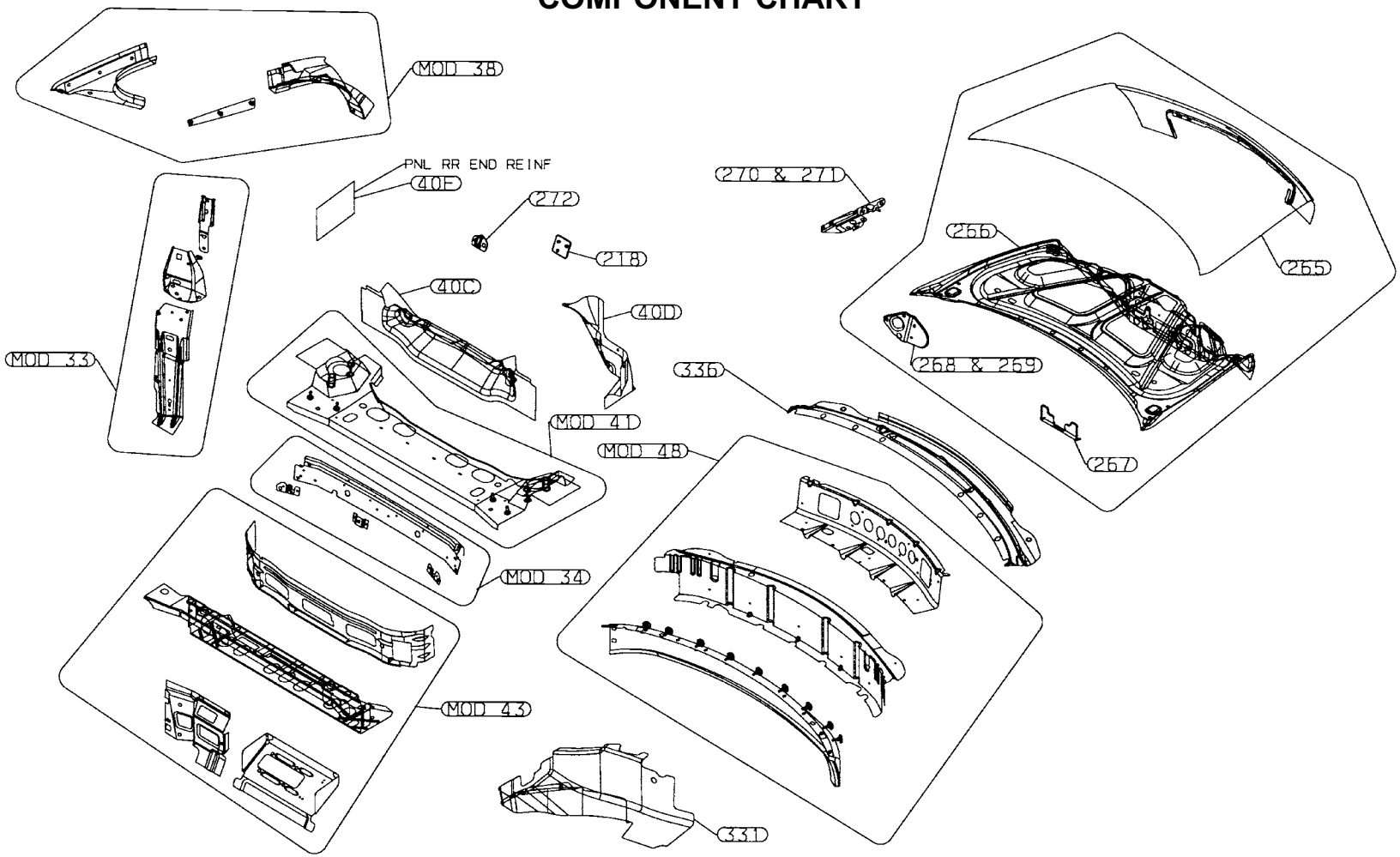

– ULTRA-HIGH STRENGTH STEEL (UH)

– HIGH STRENGTH STEEL (HS)

Back to Index

CHRYSLER SEBRING CONVERTIBLE
COMPONENT CHART

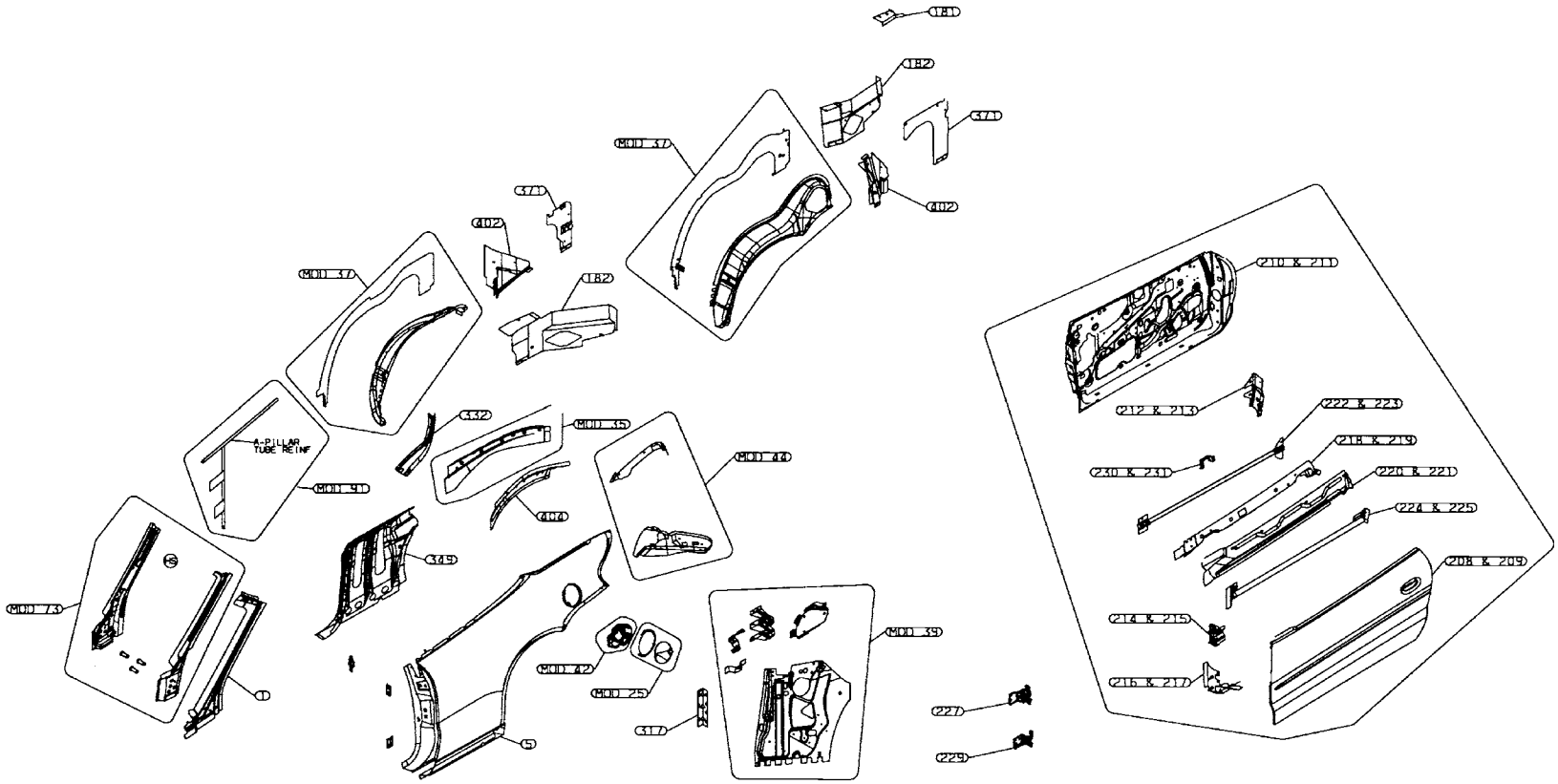

– ULTRA-HIGH STRENGTH STEEL (UH)

– HIGH STRENGTH STEEL (HS)

Back to Index

BODY CONSTRUCTION CHARACTERISTICS

Definitions of Steels used in the Chrysler Sebring and Dodge Avenger:
MS 66 - Represents an uncoated Hot Rolled Steel Sheet used mainly for interior braces and reinforcements.
MS 67 - Represents an uncoated Cold Rolled Sheet structural steel used in areas where structural integrity is critical.
EG., the type of steel used for the “A” pillar.
MS 264 - Represents an uncoated high strength low alloy (HSLA) steel used in applications where structural integrity is critical.
MS 6000-44A - Low carbon, hot dipped galvanneal (or EGA) with 45 g/m² minimum coating weight on both sides.
- Most common Sheet Steel product used by Chrysler.
MS 6000-44VA - 50 ksi min. yield strength, HSLA, killed steel, with 44 g/m² minimum coating weight on both sides.
- Most common high strength coated steel product used by Chrysler.
MS82-1228 - Represent a coated high strength low alloy (HSLA) hot or cold rolled sheet steel used in applictions where structural integrity is critical.

PARTIAL LIST OF STEEL APPLICATIONS
Galvannealed Steel

Body Side Aperture
Cowl Plenum Panel
Cowl Side Panel
Dash Panel
Front Door - Inner Panel
Front Door - Outer Panel
Front Fender
Front Floor Pan
Front Hinge Pillar
Front Rail
Front Strut Mounting Tower
Front Wheelhouse (Front and Rear)
Lower Radiator Crossmember
Rear Door - Inner Panel
Rear Door - Outer Panel
Rear Floor Pan
Rear Floor Pan Front Crossmember
Rear Floor Pan Side Rail
Rear Suspension Crossmember
Rear Quarter Panel - Inner
Rear Quarter Panel - Outer
Rear Wheelhouse - Inner
Roof Panel
UpperLoad Path Beam
Upper Radiator Crossmember

Back to Index

BODY CONSTRUCTION CHARACTERISTICS

The following measures have been implemented in order to provide maximum corrosion prevention and protection.

1. The use of galvannealed coatings throughout the body structure.
2. Ecoat is used on the complete body in all instances.
3. Body sealing.
4. Stone-chipping resistant primer application.
5. Underbody corrosion prevention.

Back to Index

CHRYSLER SEBRING BODY IN WHITE COMPLETE SECTION

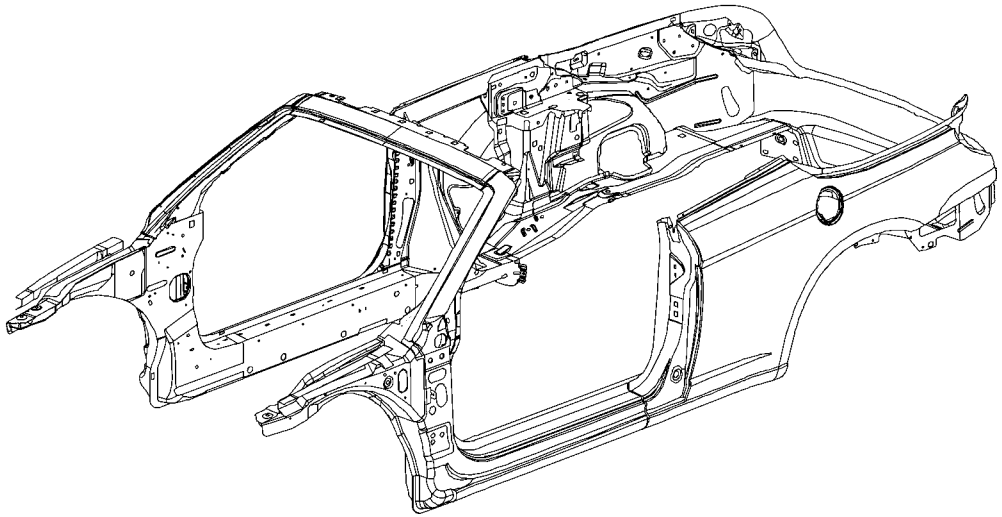

AA BEAM – UPR LOAD PATH OTR RT –
AA BEAM – UPR LOAD PATH OTR LT –
AB BEAM – LOAD PATH INR UPR RT –
AB BEAM – LOAD PATH INR UPR LT –
AC FRAME – WINDSHIELD FRAME INR RT –
AC FRAME – WINDSHIELD FRAME INR LT –
AD SILL – FRT FLOOR PAN RT –
AD SILL – FRT FLOOR PAN LT –
AE REINF – CAP –
AF BRACKET – LOAD BEAM RT –
AF BRACKET – LOAD BEAM LT –
AG END CAP – REINF –
AH PANEL – SILL OTR RT –
AH PANEL – SILL OTR LT –
AJ REINF – BODY SIDE SILL OTR RT –
AJ REINF – BODY SIDE SILL OTR LT –
AK FRAME – WINDSHIELD OPENING SIDE OTR RT –
AK FRAME – WINDSHIELD OPENING SIDE OTR LT –
AL REINF – A-PILLAR RT –
AL REINF – A-PILLAR LT –
AM FRAME – WINDSHIELD HEADER UPR –
AN FRAME – WINDSHIELD HEADER LWR –
AP PANEL – QTR OTR RT –
AP PANEL – QTR OTR LT –
AR SILL – RR FLOOR SIDEMEMBER RT –
AR SILL – RR FLOOR SIDEMEMBER LT –
AS PANEL – RR WHEELHOUSE OTR RT –
AT PLATE – SIDE SILL RT –
AT PLATE – SIDE SILL LT –
AU REINF – RR WHEELHOUSE FRT RT –
AU REINF – RR WHEELHOUSE FRT LT –
AV PANEL – RR WHEELHOUSE INR RT –
AV PANEL – RR WHEELHOUSE INR LT –
AW PANEL – QTR INR RT –
AW PANEL – QTR INR LT –
AX SIDEMEMBER – RR FLOOR UPR RT –
AX SIDEMEMBER – RR FLOOR UPR LT –
AY GUSSET – KICKUP CROSSMEMBER –
AZ PANEL – RR CLOSURE OTR –
BA PANEL – TAIL LAMP MOUNTING RT –
BA PANEL – TAIL LAMP MOUNTING LT –
BB BULKHEAD – REINF –
BC REINF – RR QTR INR BELT RT –
BC REINF – RR QTR INR BELT LT –
BD TAPPING PLATE – FRT DOOR HINGE LWR RT –
BD TAPPING PLATE – FRT DOOR HINGE LWR LT –
BE REINF – BULKHEAD –
BF PANEL – RR WHEELHOUSE INR RT –
BF PANEL – RR WHEELHOUSE INR LT –
BG GUSSET – A-PILLAR INR RT –
BG GUSSET – A-PILLAR INR LT –
BH EXTENSION – RR FLOOR SIDEMEMBER RT –
BH EXTENSION – RR FLOOR SIDEMEMBER LT –

Back to Index

PARTS IDENTIFICATION LEGEND, OVERVIEW 34

AA BEAM – UPR LOAD PATH OTR RT –
AA BEAM – UPR LOAD PATH OTR LT –
AB BEAM – LOAD PATH INR UPR RT –
AB BEAM – LOAD PATH INR UPR LT –
AC FRAME – WINDSHIELD FRAME INR RT –
AC FRAME – WINDSHIELD FRAME INR LT –
AD SILL – FRT FLOOR PAN RT –
AD SILL – FRT FLOOR PAN LT –
AE REINF – CAP –
AF BRACKET – LOAD BEAM RT –
AF BRACKET – LOAD BEAM LT –
AG END CAP – REINF –
AH PANEL – SILL OTR RT –
AH PANEL – SILL OTR LT –
AJ REINF – BODY SIDE SILL OTR RT –
AJ REINF – BODY SIDE SILL OTR LT –
AK FRAME – WINDSHIELD OPENING SIDE OTR RT –
AK FRAME – WINDSHIELD OPENING SIDE OTR LT –
AL REINF – A-PILLAR RT –
AL REINF – A-PILLAR LT –
AM FRAME – WINDSHIELD HEADER UPR –
AN FRAME – WINDSHIELD HEADER LWR –
AP PANEL – QTR OTR RT –
AP PANEL – QTR OTR LT –
AR SILL – RR FLOOR SIDEMEMBER RT –
AR SILL – RR FLOOR SIDEMEMBER LT –
AS PANEL – RR WHEELHOUSE OTR RT –
AT PLATE – SIDE SILL RT –
AT PLATE – SIDE SILL LT –
AU REINF – RR WHEELHOUSE FRT RT –
AU REINF – RR WHEELHOUSE FRT LT –
AV PANEL – RR WHEELHOUSE INR RT –
AV PANEL – RR WHEELHOUSE INR LT –
AW PANEL – QTR INR RT –
AW PANEL – QTR INR LT –
AX SIDEMEMBER – RR FLOOR UPR RT –
AX SIDEMEMBER – RR FLOOR UPR LT –
AY GUSSET – KICKUP CROSSMEMBER –
AZ PANEL – RR CLOSURE OTR –
BA PANEL – TAIL LAMP MOUNTING RT –
BA PANEL – TAIL LAMP MOUNTING LT –
BB BULKHEAD – REINF –
BC REINF – RR QTR INR BELT RT –
BC REINF – RR QTR INR BELT LT –
BD TAPPING PLATE – FRT DOOR HINGE LWR RT –
BD TAPPING PLATE – FRT DOOR HINGE LWR LT –
BE REINF – BULKHEAD –
BF PANEL – RR WHEELHOUSE INR RT –
BF PANEL – RR WHEELHOUSE INR LT –
BG GUSSET – A-PILLAR INR RT –
BG GUSSET – A-PILLAR INR LT –
BH EXTENSION – RR FLOOR SIDEMEMBER RT –
BH EXTENSION – RR FLOOR SIDEMEMBER LT –

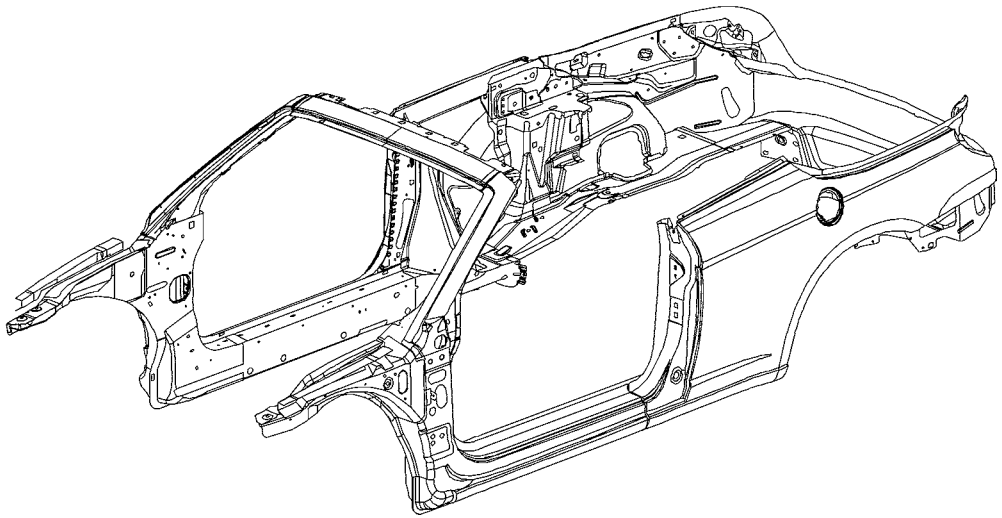

Back to Index

WELD LAYOUT LOCATION GUIDE

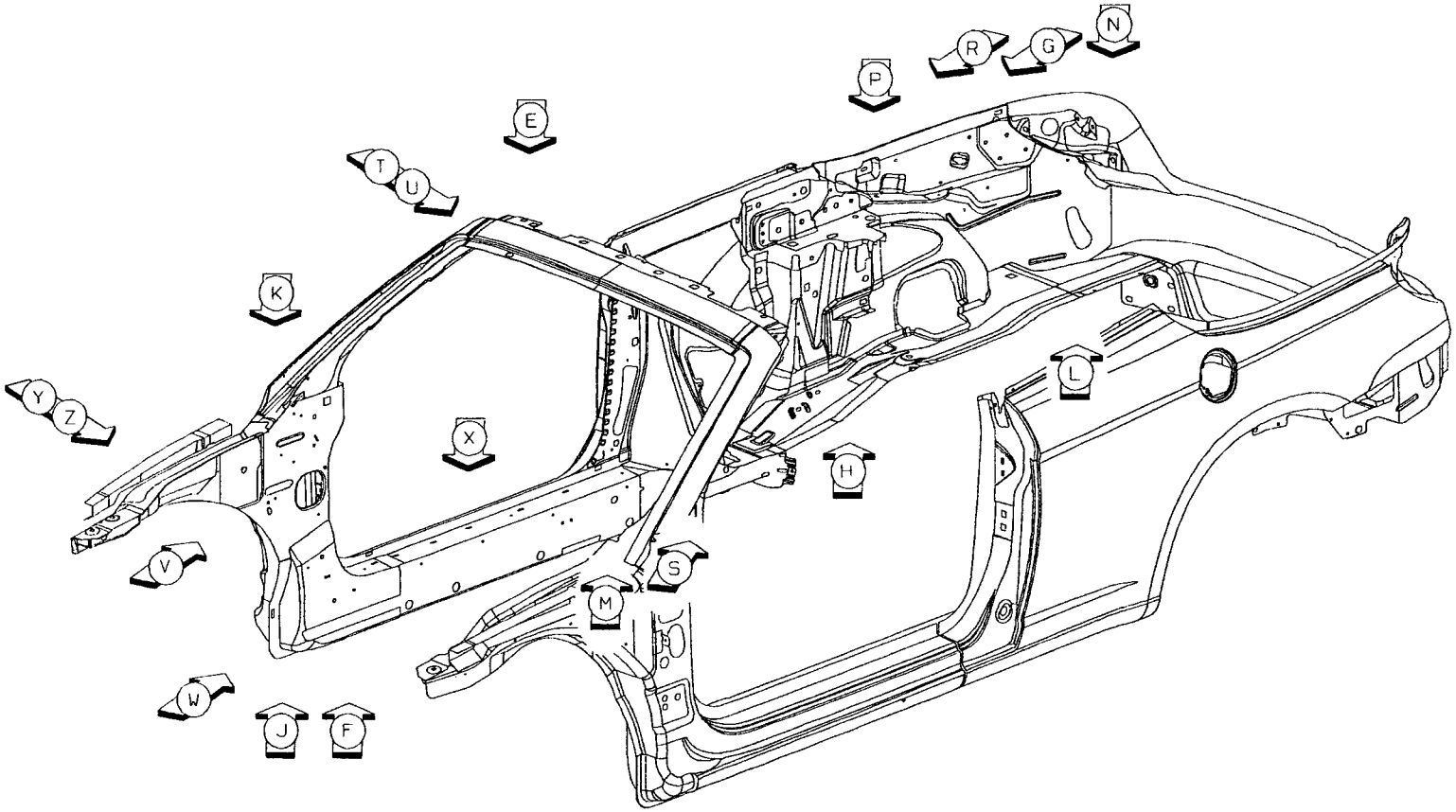

Back to Index

01 AB TO AA 28/SD S/WELDS (ORD)

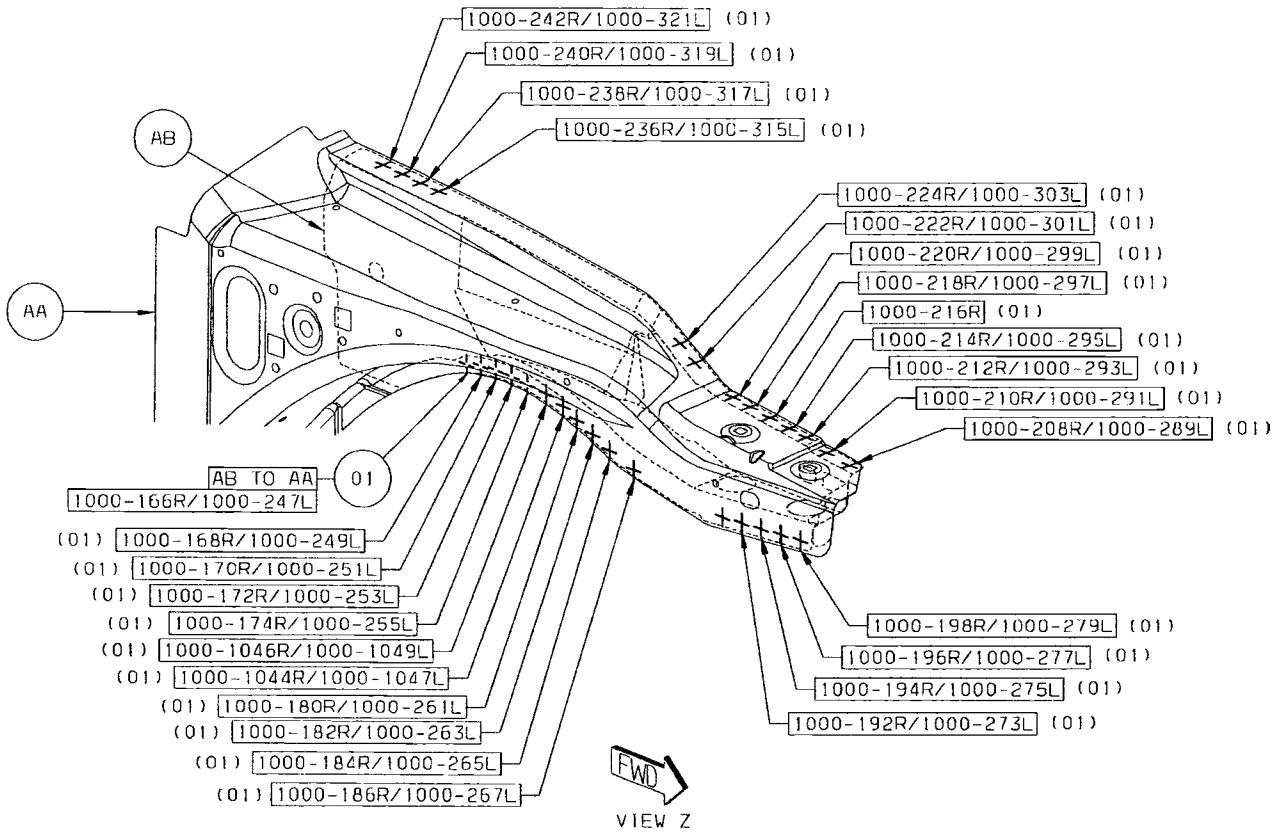

Back to Index

02 AD TO AB TO AA 2/SD S/WELDS (ORD)
03 AC TO AB TO AA 1/SD S/WELDS (ORD)
04 AE TO AB TO AA 5/SD S/WELDS (ORD)
05 AG TO AA 4/SD S/WELDS (ORD)
06 AF TO AB TO AA 2/SD S/WELDS (ORD)

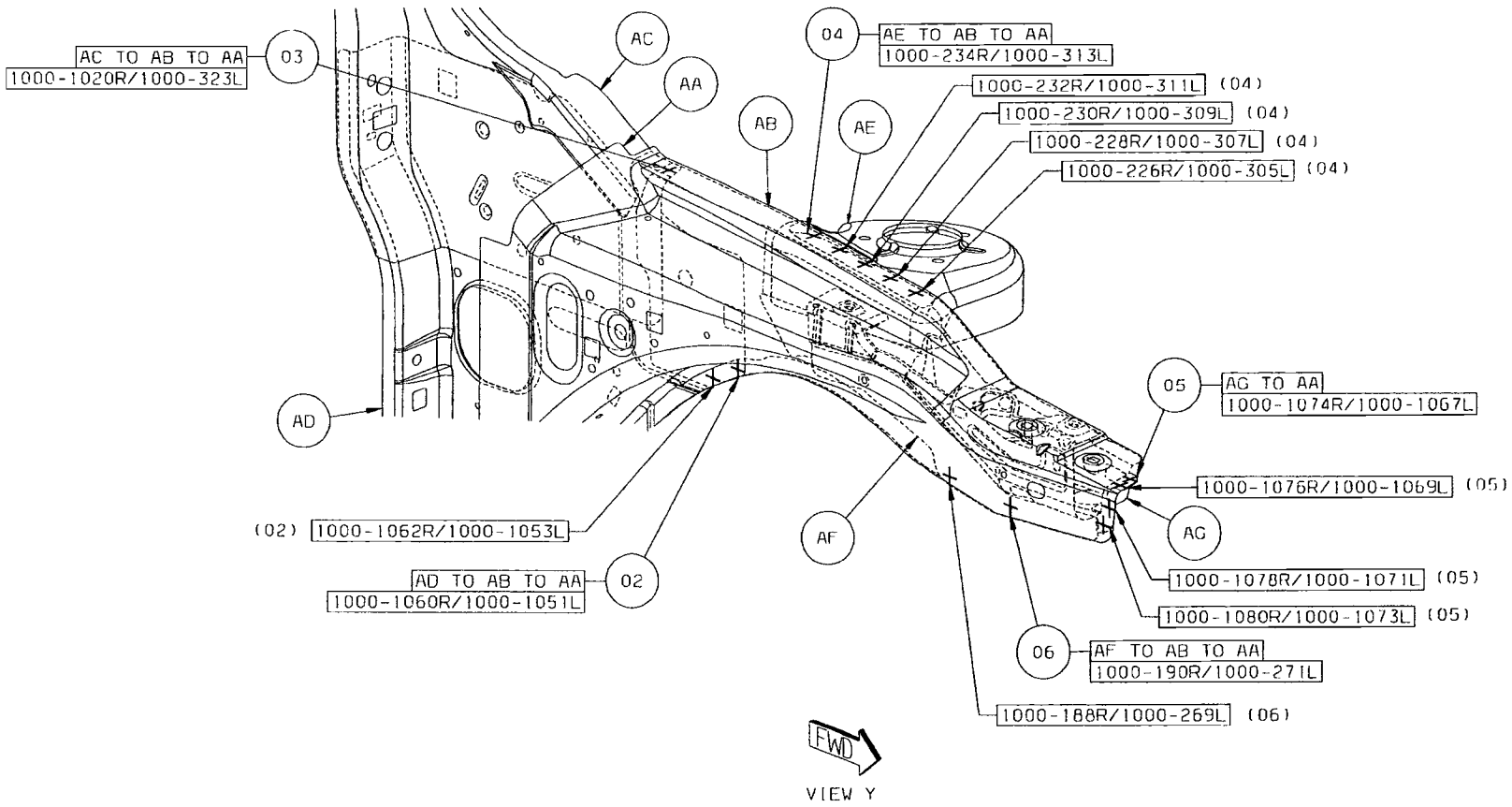

Back to Index

07 AJ TO AH TO AD 30/SD S/WELDS (ORD)

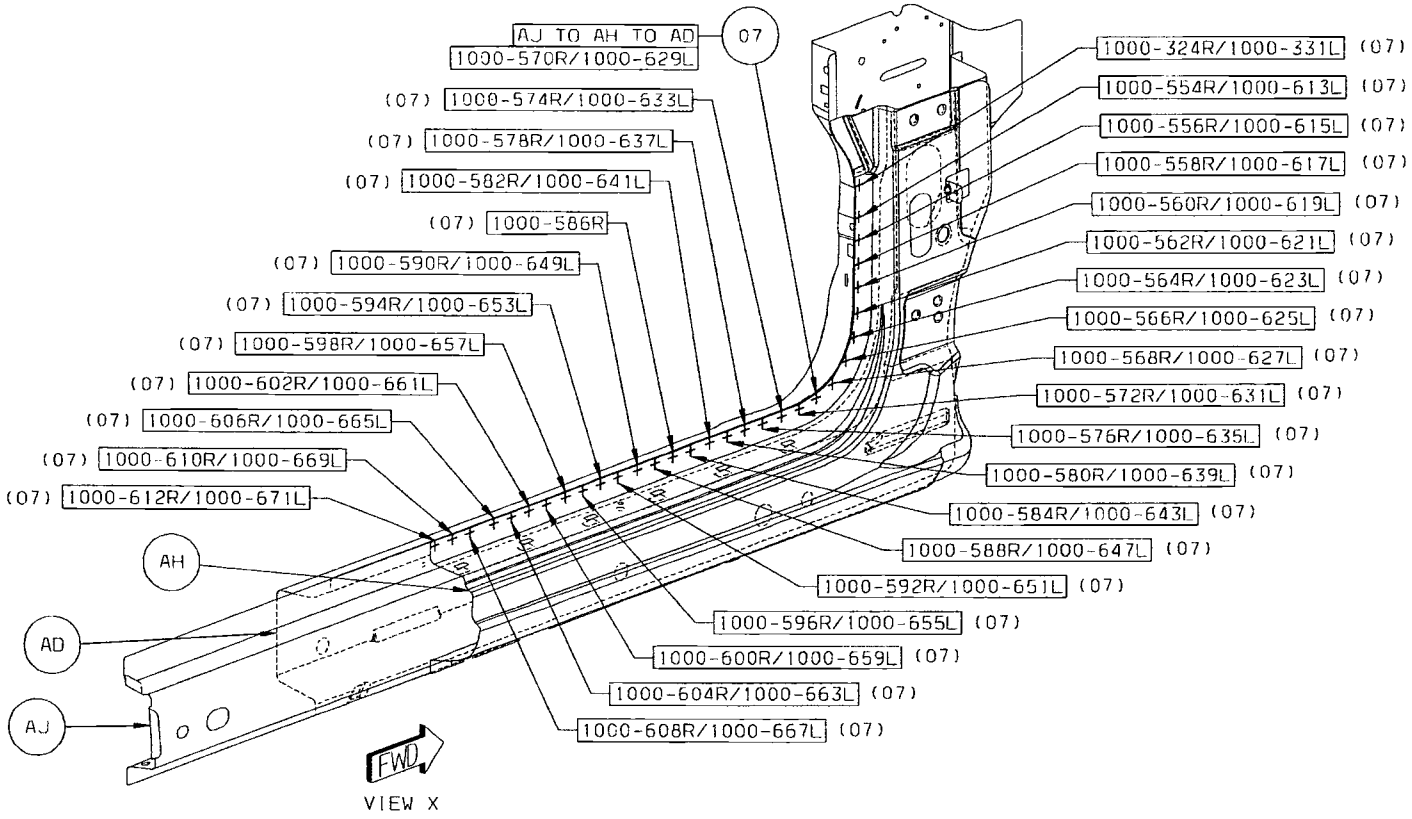

Back to Index

08 AJ TO AH TO AD 27/SD S/WELDS (ORD)

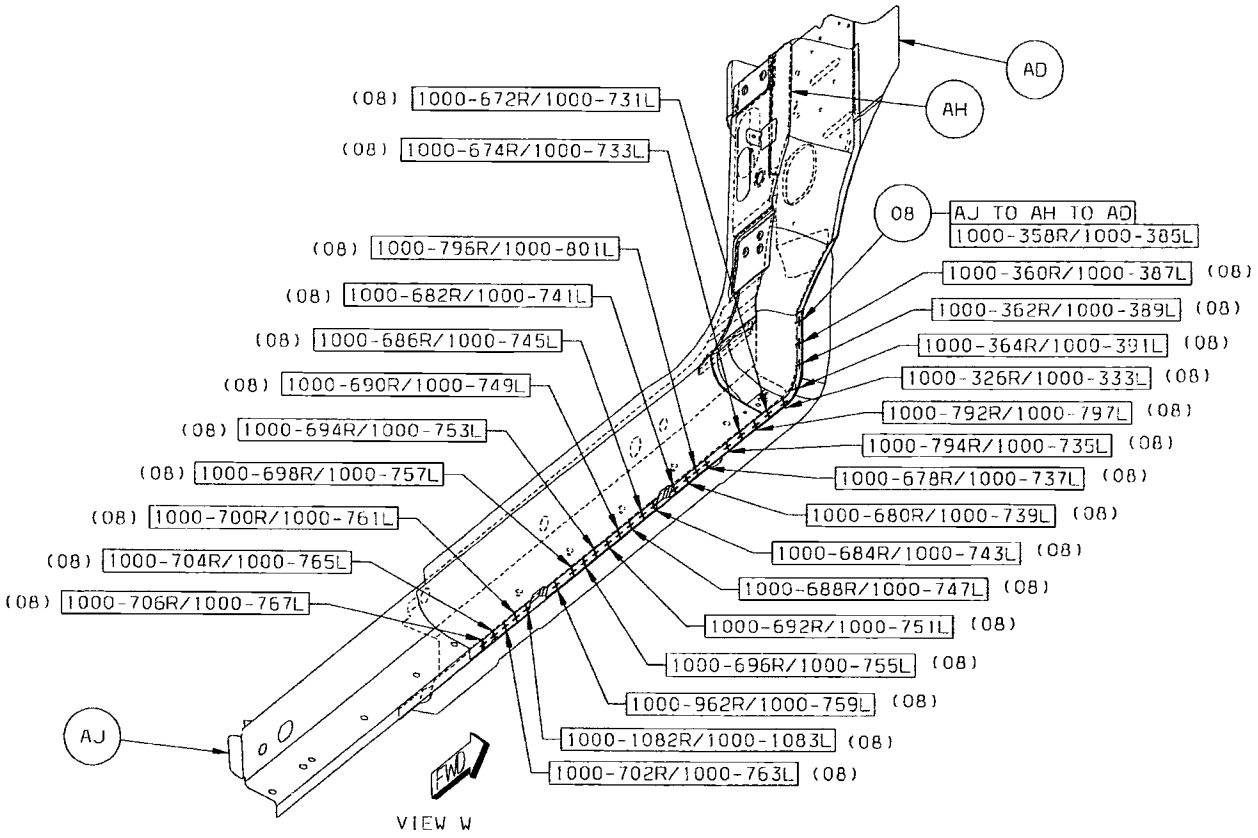

Back to Index

09 AD TO AA 2/SD S/WELDS (ORD)
10 AJ TO AD TO AA 2/SD S/WELDS (ORD)
11 AJ TO AD 6/SD S/WELDS (ORD)
12 AM TO AL TO AK 3/SD S/WELDS (ORD)
13 AN TO AM TO AC 4/SD S/WELDS (ORD)
14 AM TO AK TO AC 1/SD S/WELD (ORD)
15 AN TO AC 3/SD S/WELDS (ORD)

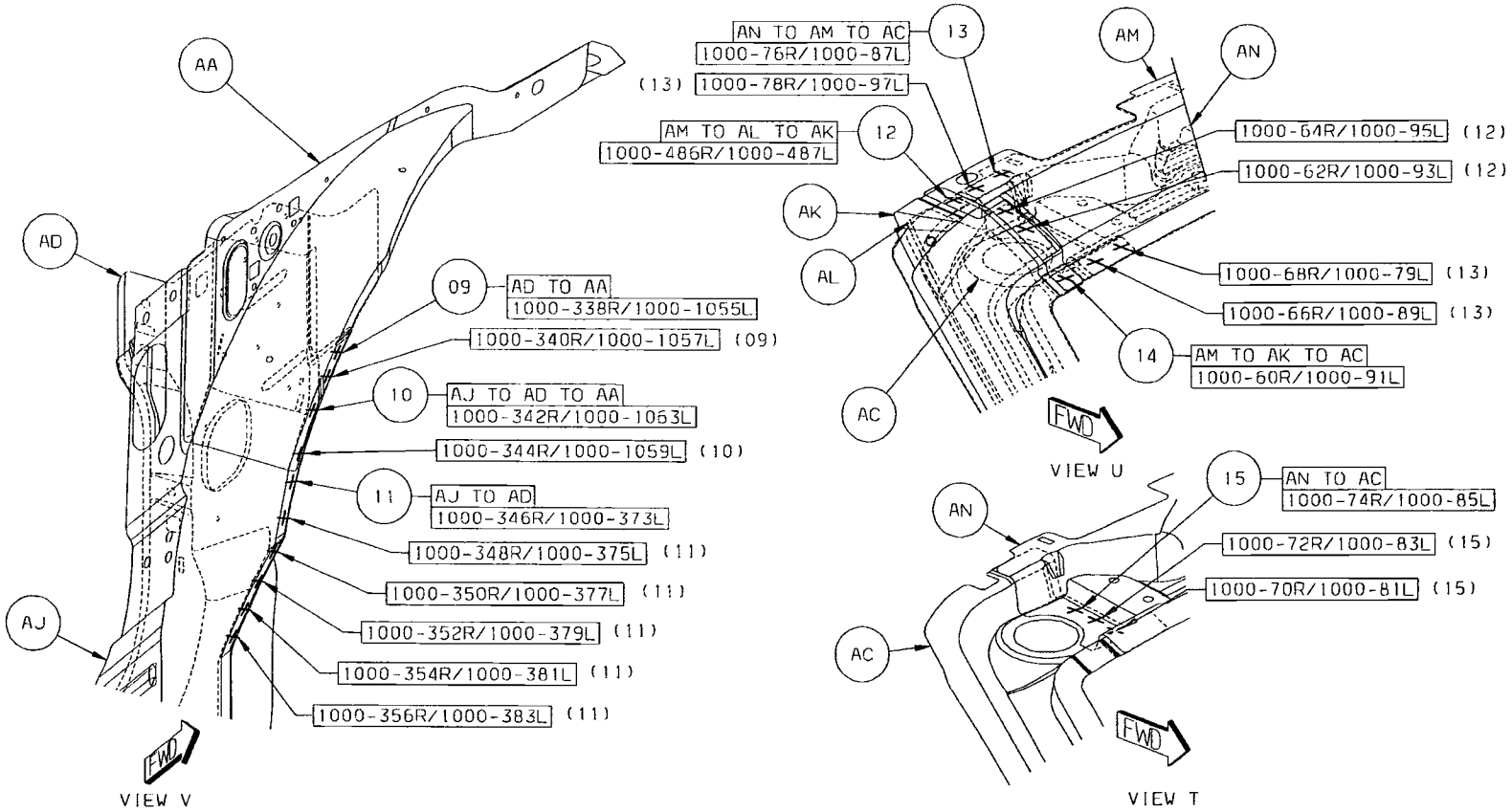

Back to Index

16 AT TO AS TO AP 1/SD S/WELDS (ORD)
17 AR TO AP TO AJ 9/SD S/WELDS (ORD)
18 AP TO AJ TO AD 4/SD S/WELDS (ORD)

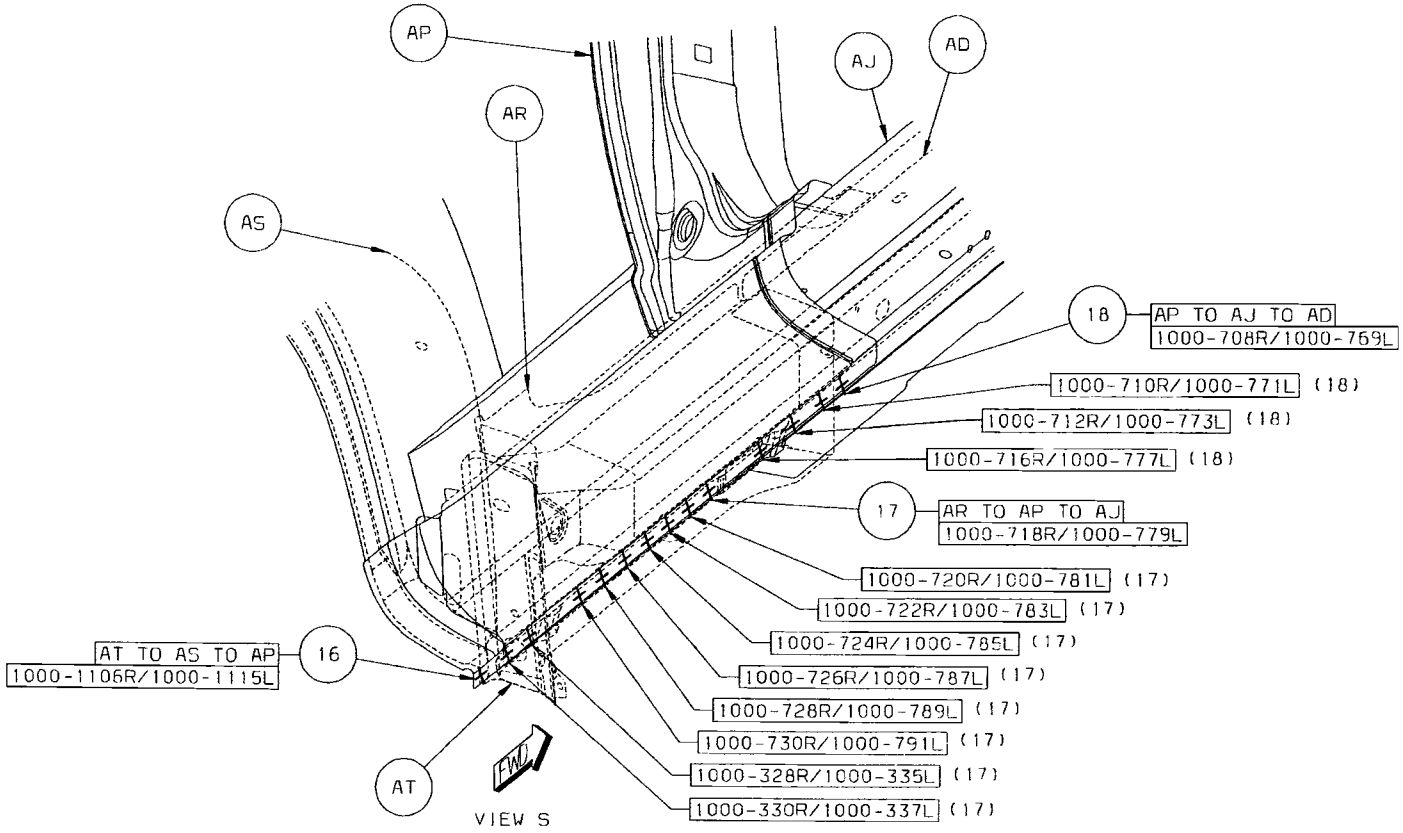

Back to Index

19 AT TO AS 4/SD S/WELDS (ORD)
20 AW TO AT TO AS 3/SD S/WELDS (ORD)
21 AW TO AV 1/SD S/WELD (ORD)
22 AW TO AV TO AS 11R/5L S/WELDS (ORD)
23 AW TO AV TO AU 2/SD S/WELDS (ORD)
24 AW TO AU TO AS 1/SD S/WELD (ORD)
25 AW TO AV 4/SD S/WELDS (ORD)

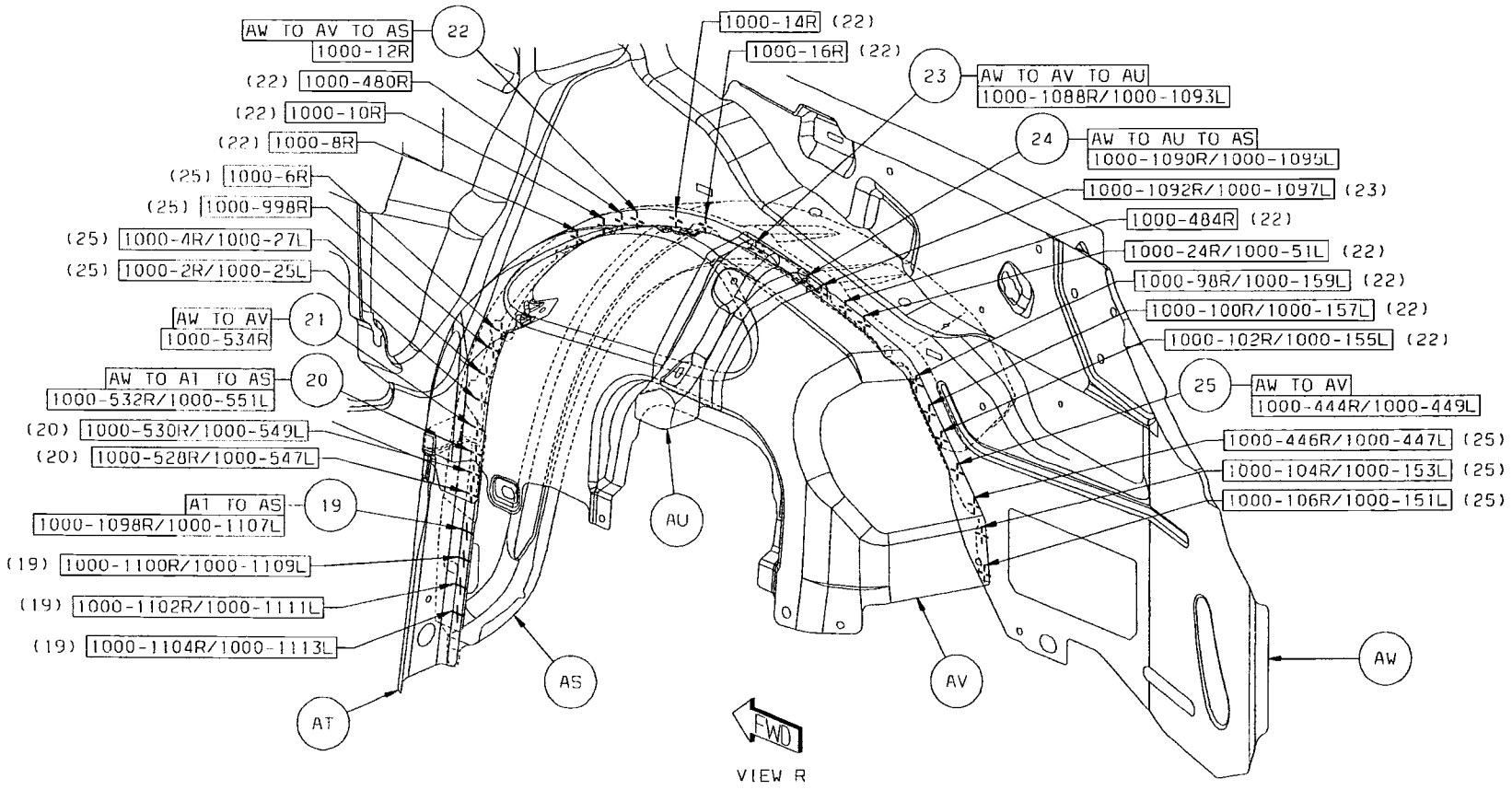

Back to Index

26 AX TO AW 2/SD S/WELDS (ORD)
27 AY TO AW 16/SD S/WELDS

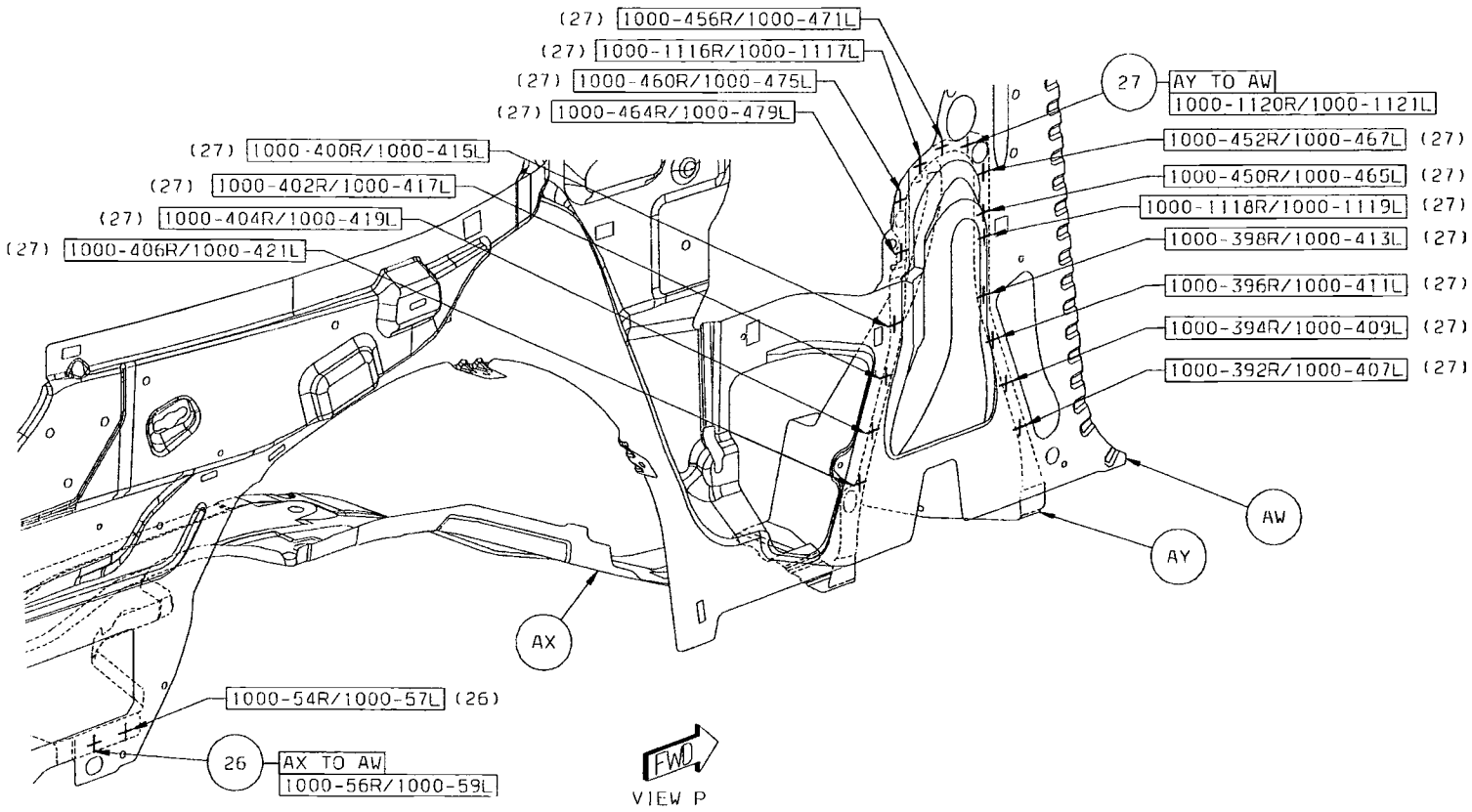

Back to Index

28 BA TO AZ 6/SD S/WELDS (ORD)
29 BC TO BB TO AS 1/SD S/WELDS (ORD)
30 BB TO AW 6/SD S/WELDS (ORD)
31 AZ TP AW 7/SD S/WELDS (ORD)

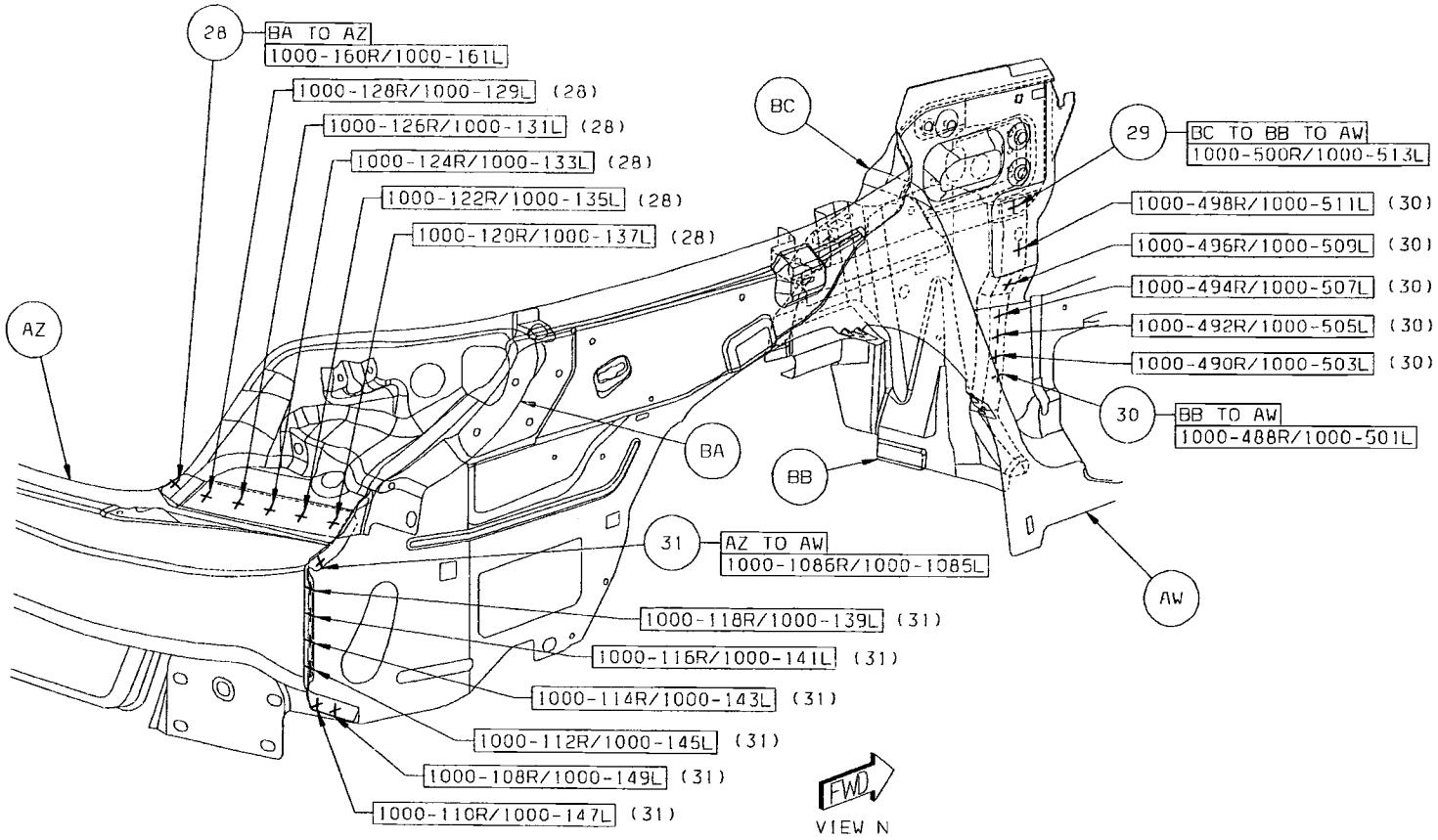

Back to Index

32 AW TO AR 9/SD S/WELDS (ORD)
33 BH TO AW 9/SD S/WELDS (ORD)

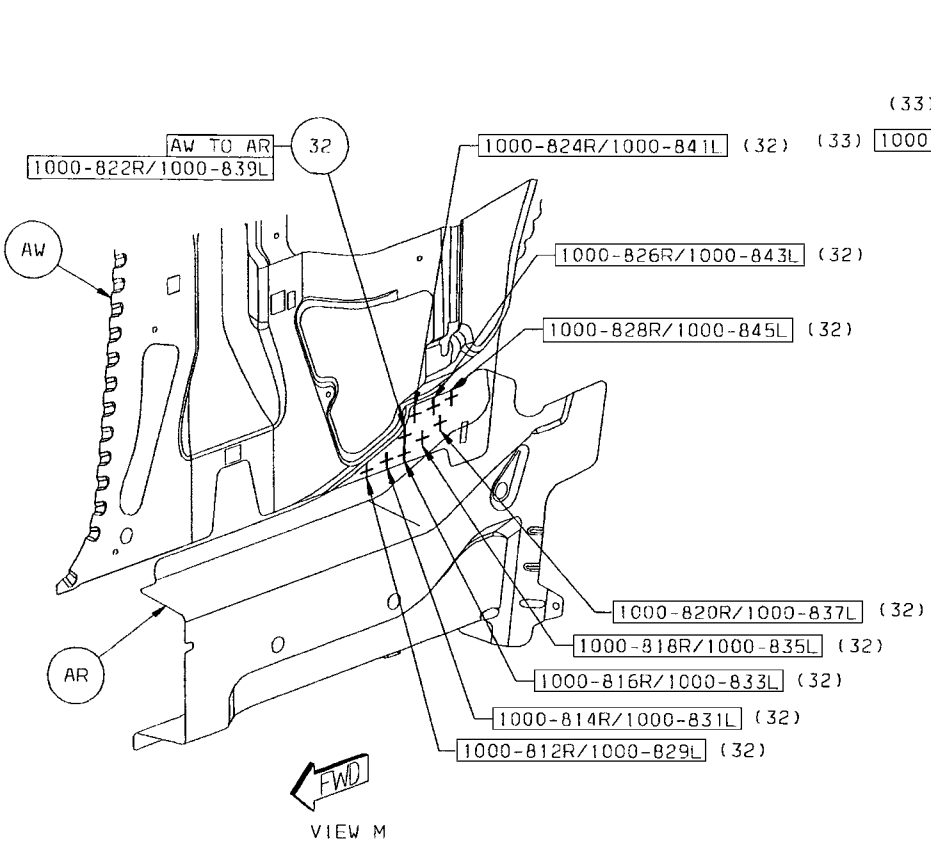

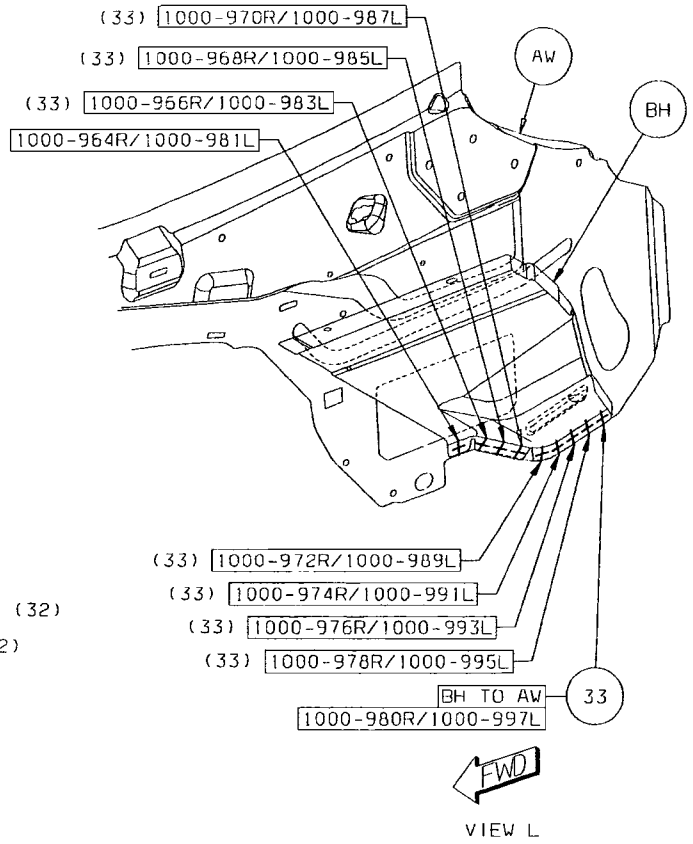

Back to Index

34 AJ TO AD TO AC 1`/SD S/WELDS (ORD)
35 AL TO AD TO AC 2/SD S/WELDS (ORD)
36 BD TO AD TO AC 4/SD S/WELDS (ORD)
37 AD TO AC 1/SD FCAW
38 BE TO AW 1/SD FCAW

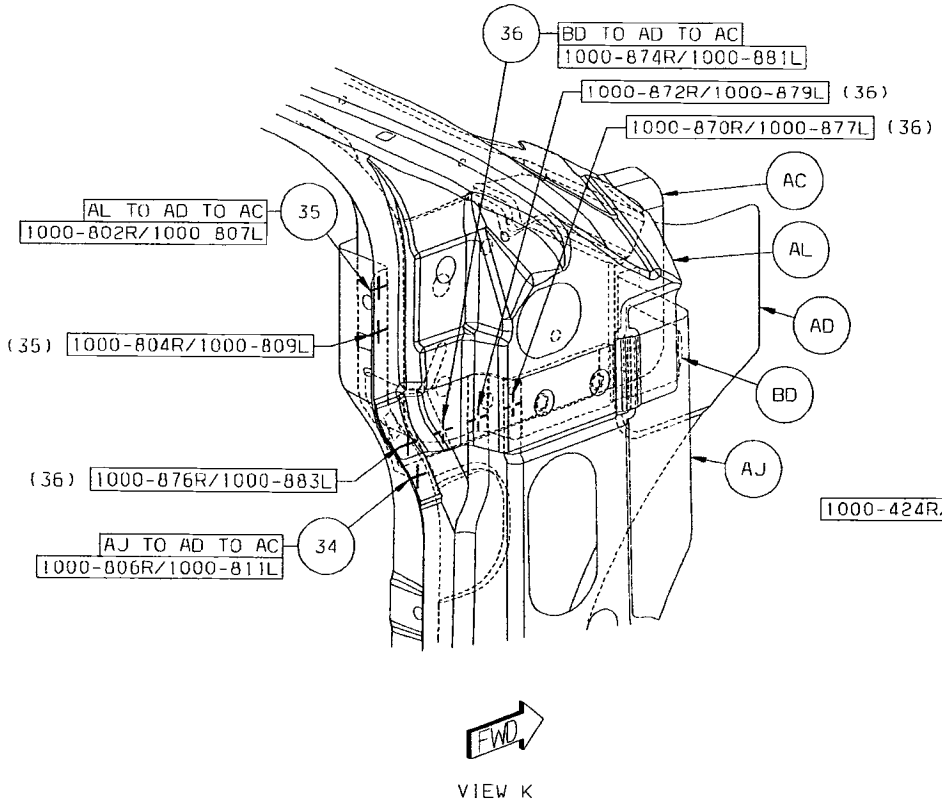

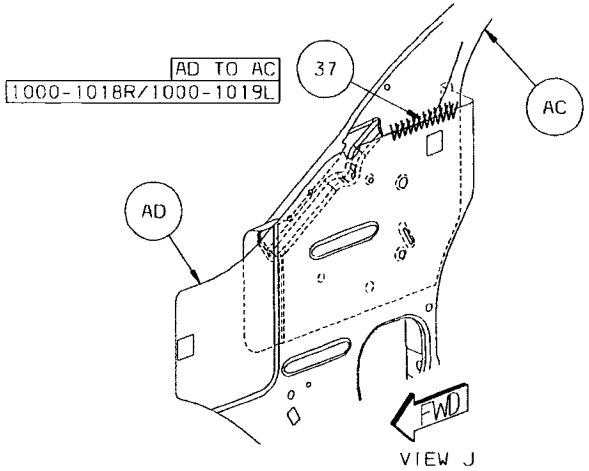

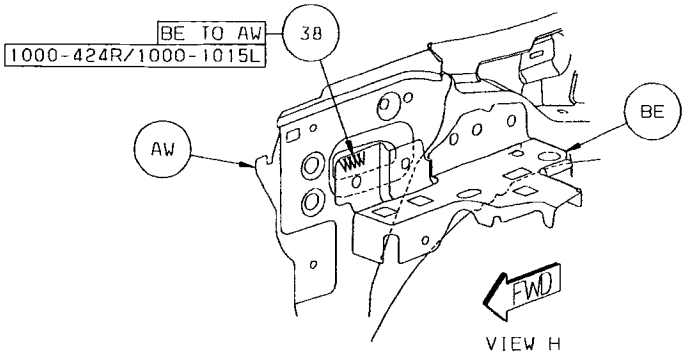

Back to Index

39 BF TO AW 1L S/WELDS (ORD)
40 BF TO AW 6L S/WELDS (ORD)
41 BF TO AW TO AS 5L S/WELDS (ORD)

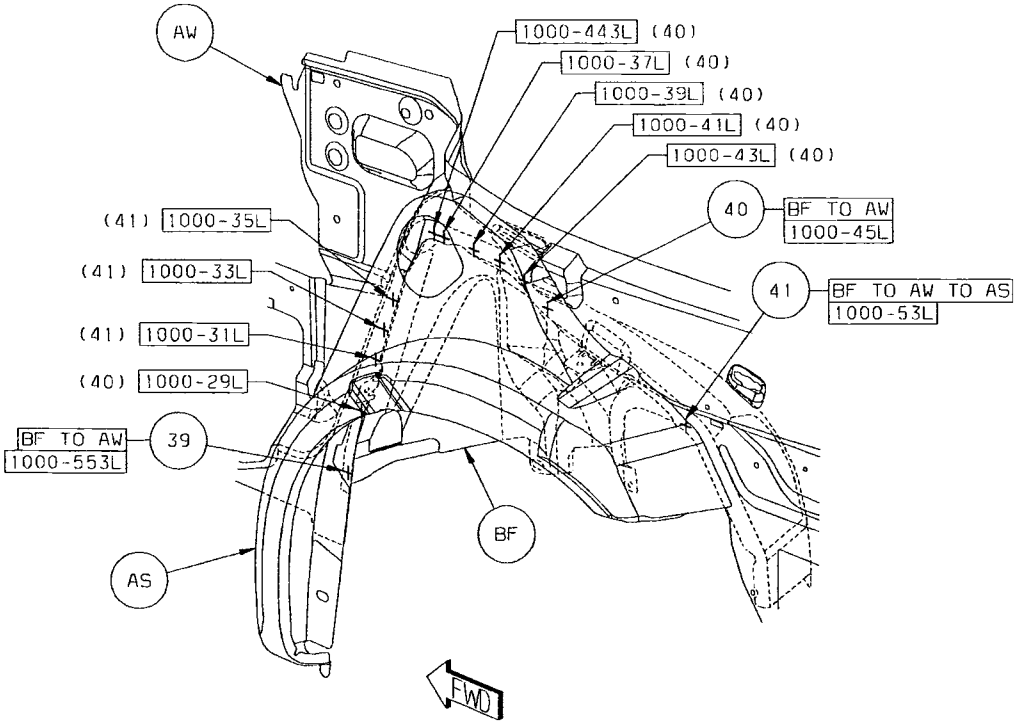

VIEW G
(LEFT SIDE SHOWN)

Back to Index

42 AD TO AC 1/SD STRUC ADH
43 AD TO AC 1/SD STRUC ADH
44 BG TO AD 1/SD STRUC ADH
45 AR TO AJ TO AD TO AC 1/SD STRUC ADH
46 AR TO AJ TO AD 1/SD STRUC ADH

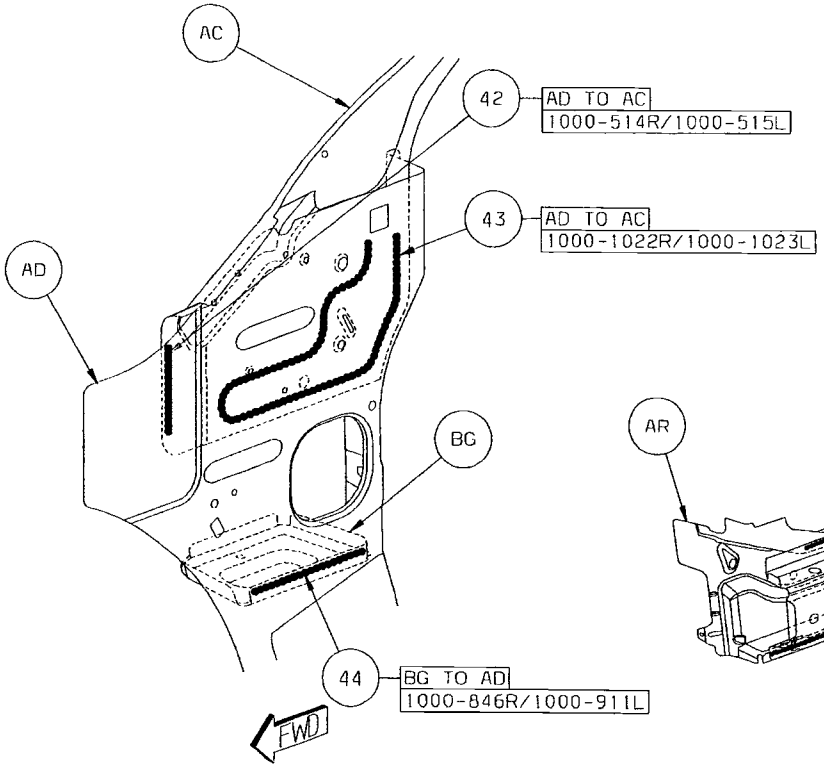

VIEW F

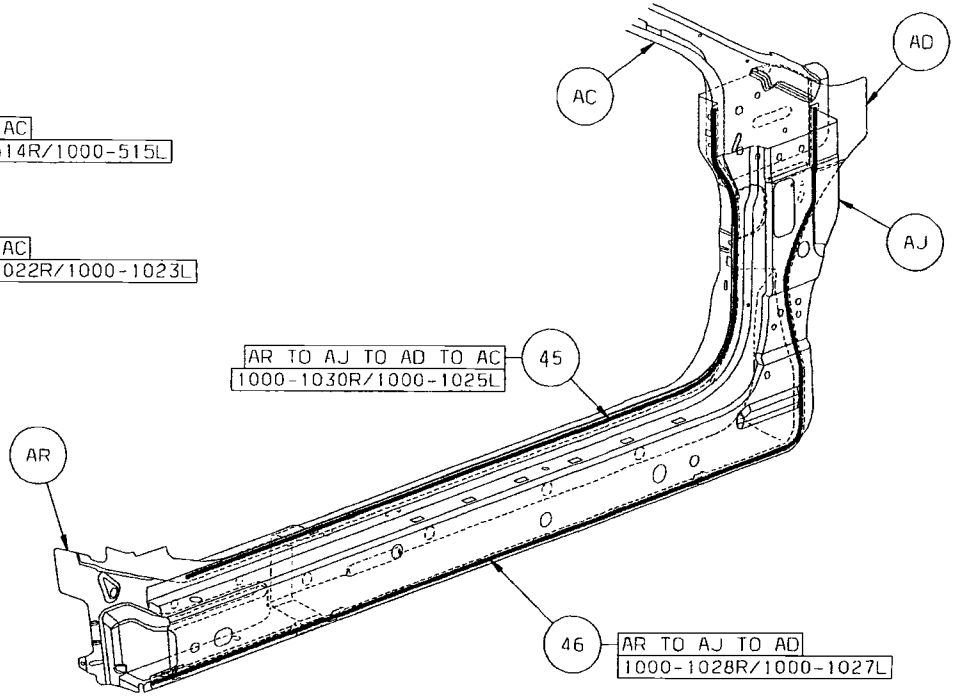

VIEW E

Back to Index

DODGE AVENGER BODY IN WHITE COMPLETE SECTION

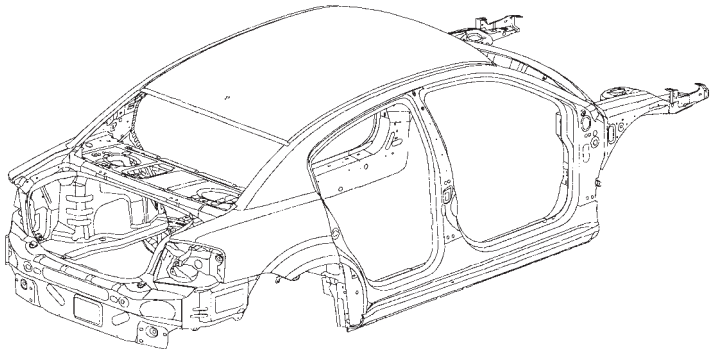

AA BEAM – UPR LOAD PATH OTR RT –
AA BEAM – UPR LOAD PATH OTR LT –
AB BEAM – LOAD PATH INR UPR RT –
AB BEAM – LOAD PATH INR UPR LT –
AC REINF – CAP –
AC REINF – CAP –
AD BRACKET – LOAD BEAM RT –
AD BRACKET – LOAD BEAM LT –
AE END CAP – REINF –
AE END CAP – REINF –
AF PANEL – HINGE PILLAR RT –
AF PANEL – HINGE PILLAR LT –
AG FRAME – WINDSHIELD OPENING SIDE INR –
AG FRAME – WINDSHIELD OPENING SIDE INR –
AH PANEL – COWL TOP UPPER –
AJ PANEL – COWL SIDE RT –
AJ PANEL – COWL SIDE LT –
AK REINF – HINGE PILLAR LWR RT –
AK REINF – HINGE PILLAR LWR LT –
AL REINF – HINGE PILLAR UPR RT –
AL REINF – HINGE PILLAR UPR LT –
AM PANEL – BODY SIDE APERTURE RT –
AM PANEL – BODY SIDE APERTURE LT –
AN SILL – OTR RT –
AN SILL – OTR LT –
AP SILL – FRT FLOOR PAN RT –
AP SILL – FRT FLOOR PAN LT –
AR PANEL – B-PILLAR INR RT –
AR PANEL – B-PILLAR INR LT –
AS PANEL – QTR INR UPR RT –
AS PANEL – QTR INR UPR LT –
AT HEADER – RR LWR –
AU PANEL – QTR INR RR RT –
AU PANEL – QTR INR RR LT –
AV BOW – B-PILLAR UPR –
AW HEADER – ROOF FRT –
AX PANEL – ROOF OTR –
AY RAIL – ROOF SIDE INR RT –
AY RAIL – ROOF SIDE INR LT –
AZ BOW – B-PILLAR LWR –
BA PLATE – SIDE SILL RT –
BA PLATE – SIDE SILL LT –
BB PANEL – QTR INR LWR RR RT –
BB PANEL – QTR INR LWR RR LT –
BC REINF – C-PILLAR LWR RT –
BC REINF – C-PILLAR LWR LT –
BD SILL – RR FLOOR SIDEMEMBER RT –
BD SILL – RR FLOOR SIDEMEMBER LT –
BE PANEL – RR CLOSURE OTR LWR EXTENSION RT –
BE PANEL – RR CLOSURE OTR LWR EXTENSION LT –
BF PANEL – RR WHEELHOUSE INR FRT RT –
BF PANEL – RR WHEELHOUSE INR FRT LT –
BG REINF – SHELF TO WHEELHOUSE –
BG REINF – SHELF TO WHEELHOUSE –
BH REINF – SHELF EXTENSION RT –
BH REINF – SHELF EXTENSION LT –
BJ PANEL – SHELF –
BK SUPPORT – RR SHELF PANEL TO WHEELHOUSE FRT –
BK SUPPORT – RR SHELF PANEL TO WHEELHOUSE FRT –
BL TROUGH – QTR OTR PANEL DRAIN RT –
BL TROUGH – QTR OTR PANEL DRAIN LT –
BM EXTENSION – QTR PANEL TAIL LAMP RT – RT
BM EXTENSION – QTR PANEL TAIL LAMP LT – RT
BN PANEL – RR CLOSURE OTR –
BP EXTENSION – RR FLOOR SIDEMEMBR RT –
BP EXTENSION – RR FLOOR SIDEMEMBR LT –
BR SIDEMEMBER – RR FLOOR UPR RT –
BR SIDEMEMBER – RR FLOOR UPR LT –
BS PANEL – RR CLOSURE INR –
BS PANEL – RR CLOSURE OTR – NONE
BT REINF – SHELF PANEL RR –
BU REINF – RR SHELF PANEL FRT –

Back to Index

PARTS IDENTIFICATION LEGEND, OVERVIEW 36

AA BEAM – UPR LOAD PATH OTR RT –
AA BEAM – UPR LOAD PATH OTR LT –
AB BEAM – LOAD PATH INR UPR RT –
AB BEAM – LOAD PATH INR UPR LT –
AC REINF – CAP –
AC REINF – CAP –
AD BRACKET – LOAD BEAM RT –
AD BRACKET – LOAD BEAM LT –
AE END CAP – REINF –
AE END CAP – REINF –
AF PANEL – HINGE PILLAR RT –
AF PANEL – HINGE PILLAR LT –
AG FRAME – WINDSHIELD OPENING SIDE INR –
AG FRAME – WINDSHIELD OPENING SIDE INR –
AH PANEL – COWL TOP UPPER –
AJ PANEL – COWL SIDE RT –
AJ PANEL – COWL SIDE LT –
AK REINF – HINGE PILLAR LWR RT –
AK REINF – HINGE PILLAR LWR LT –
AL REINF – HINGE PILLAR UPR RT –
AL REINF – HINGE PILLAR UPR LT –
AM PANEL – BODY SIDE APERTURE RT –
AM PANEL – BODY SIDE APERTURE LT –
AN SILL – OTR RT –
AN SILL – OTR LT –
AP SILL – FRT FLOOR PAN RT –
AP SILL – FRT FLOOR PAN LT –
AR PANEL – B-PILLAR INR RT –
AR PANEL – B-PILLAR INR LT –
AS PANEL – QTR INR UPR RT –
AS PANEL – QTR INR UPR LT –
AT HEADER – RR LWR –
AU PANEL – QTR INR RR RT –
AU PANEL – QTR INR RR LT –
AV BOW – B-PILLAR UPR –
AW HEADER – ROOF FRT –
AX PANEL – ROOF OTR –
AY RAIL – ROOF SIDE INR RT –
AY RAIL – ROOF SIDE INR LT –
AZ BOW – B-PILLAR LWR –
BA PLATE – SIDE SILL RT –
BA PLATE – SIDE SILL LT –
BB PANEL – QTR INR LWR RR RT –
BB PANEL – QTR INR LWR RR LT –
BC REINF – C-PILLAR LWR RT –
BC REINF – C-PILLAR LWR LT –
BD SILL – RR FLOOR SIDEMEMBER RT –
BD SILL – RR FLOOR SIDEMEMBER LT –
BE PANEL – RR CLOSURE OTR LWR EXTENSION RT –
BE PANEL – RR CLOSURE OTR LWR EXTENSION LT –
BF PANEL – RR WHEELHOUSE INR FRT RT –
BF PANEL – RR WHEELHOUSE INR FRT LT –
BG REINF – SHELF TO WHEELHOUSE –
BG REINF – SHELF TO WHEELHOUSE –
BH REINF – SHELF EXTENSION RT –
BH REINF – SHELF EXTENSION LT –
BJ PANEL – SHELF –
BK SUPPORT – RR SHELF PANEL TO WHEELHOUSE FRT –
BK SUPPORT – RR SHELF PANEL TO WHEELHOUSE FRT –
BL TROUGH – QTR OTR PANEL DRAIN RT –
BL TROUGH – QTR OTR PANEL DRAIN LT –
BM EXTENSION – QTR PANEL TAIL LAMP RT – RT
BM EXTENSION – QTR PANEL TAIL LAMP LT – RT
BN PANEL – RR CLOSURE OTR –
BP EXTENSION – RR FLOOR SIDEMEMBR RT –
BP EXTENSION – RR FLOOR SIDEMEMBR LT –
BR SIDEMEMBER – RR FLOOR UPR RT –
BR SIDEMEMBER – RR FLOOR UPR LT –
BS PANEL – RR CLOSURE INR –
BS PANEL – RR CLOSURE OTR – NONE
BT REINF – SHELF PANEL RR –
BU REINF – RR SHELF PANEL FRT –

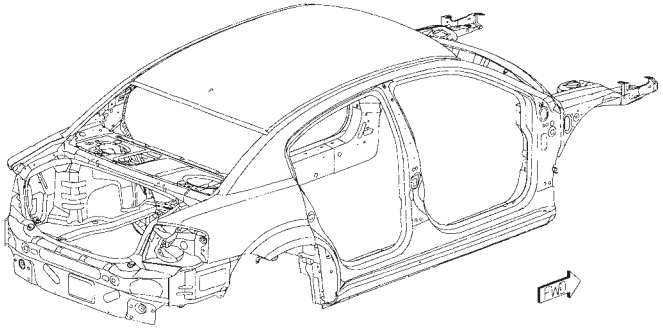

Back to Index

WELD LAYOUT LOCATION GUIDE

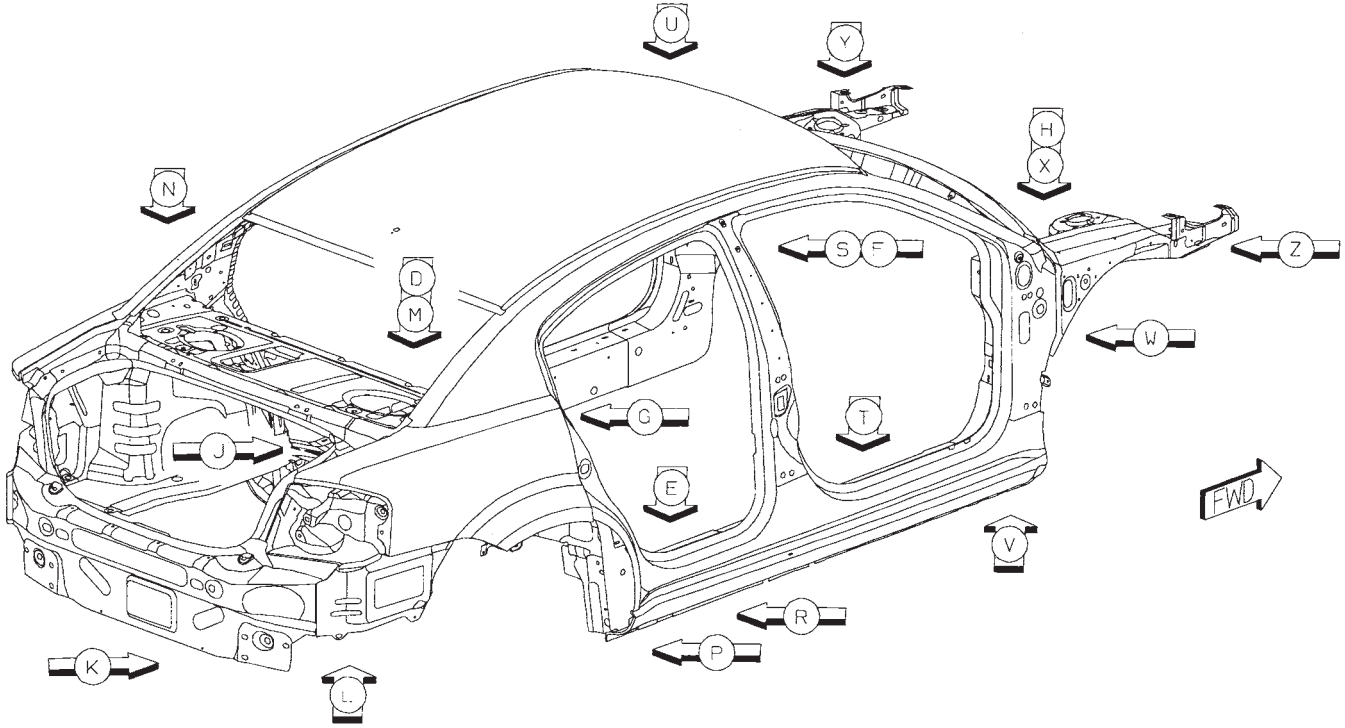

Back to Index

01 AC TO AB TO AA 5/SD S/WELDS (ORD)
02 AB TO AA 28R/27L S/WELDS (ORD)
03 AE TO AA TO AD 1/SD S/WELD (ORD)
04 AD TO AB TO AA 5/SD S/WELDS (ORD)

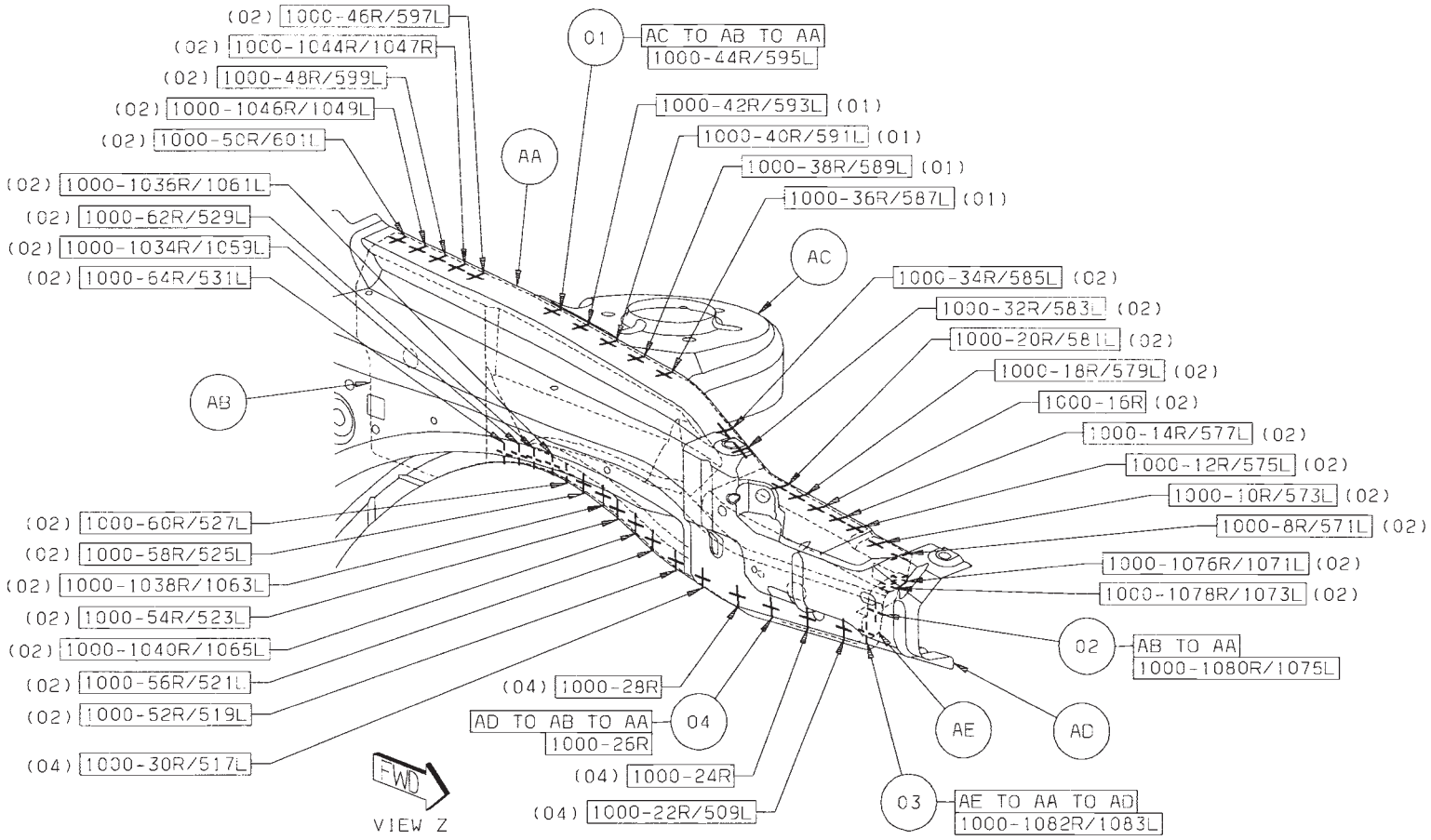

Back to Index

05 AD TO AA TO AB 3L S/WELDS (ORD)
06 AA TO AJ 2/SD S/WELDS (ORD)
07 AB TO AA TO AJ 2/SD S/WELDS (ORD)
08 AJ TO AG TO AF 2/SD S/WELDS (ORD)
09 AH TO AG TO AF 2/SD S/WELDS (ORD)
10 AA TO AJ TO AF 2/SD S/WELDS (ORD)
11 AJ TO AF 4/SD S/WELDS (ORD)

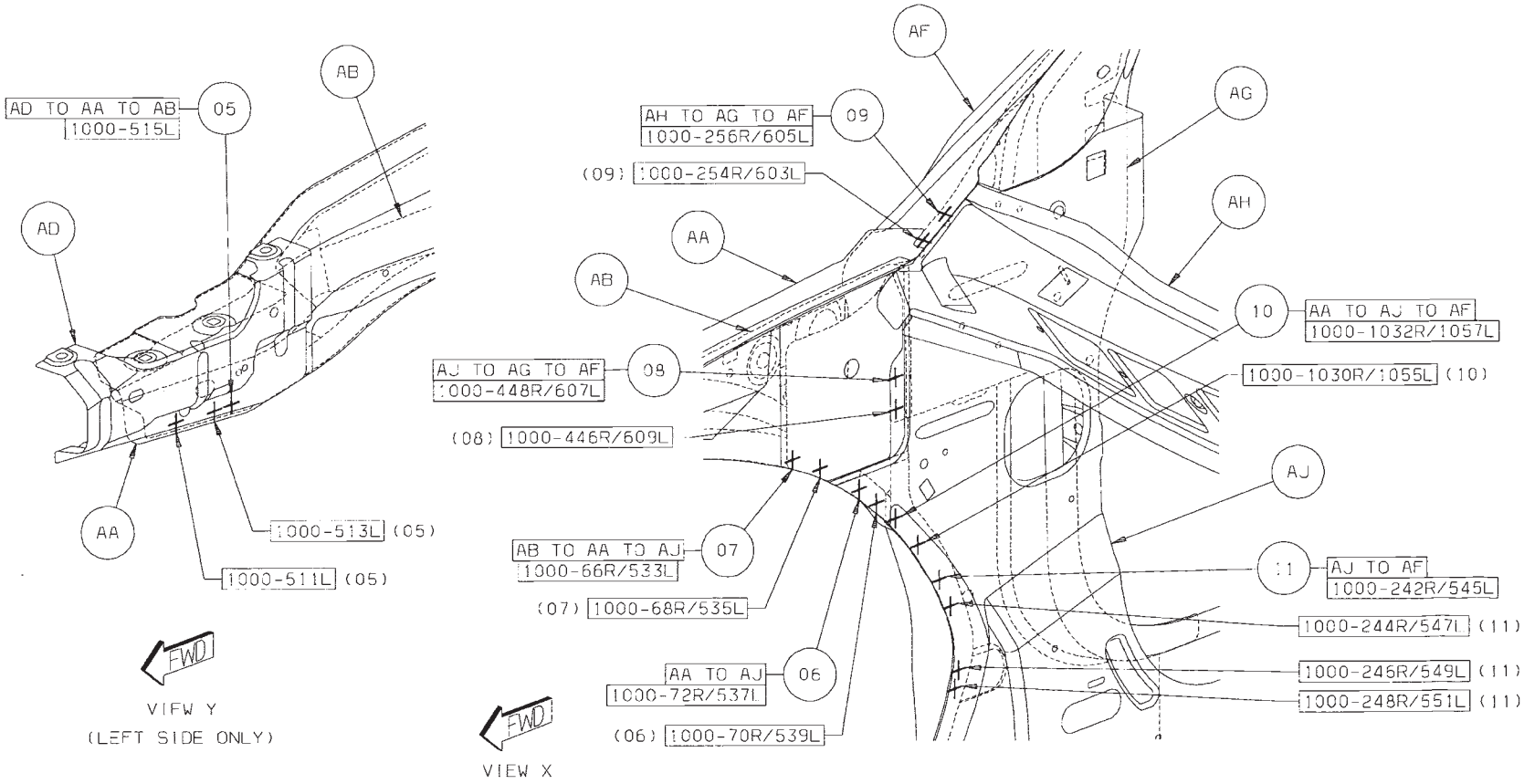

Back to Index

12 AL TO AG TO AJ 3/SD S/WELDS (ORD)
13 AG TO AJ 2/SD S/WELDS (ORD)
14 AK TO AJ 2/SD S/WELDS (ORD)

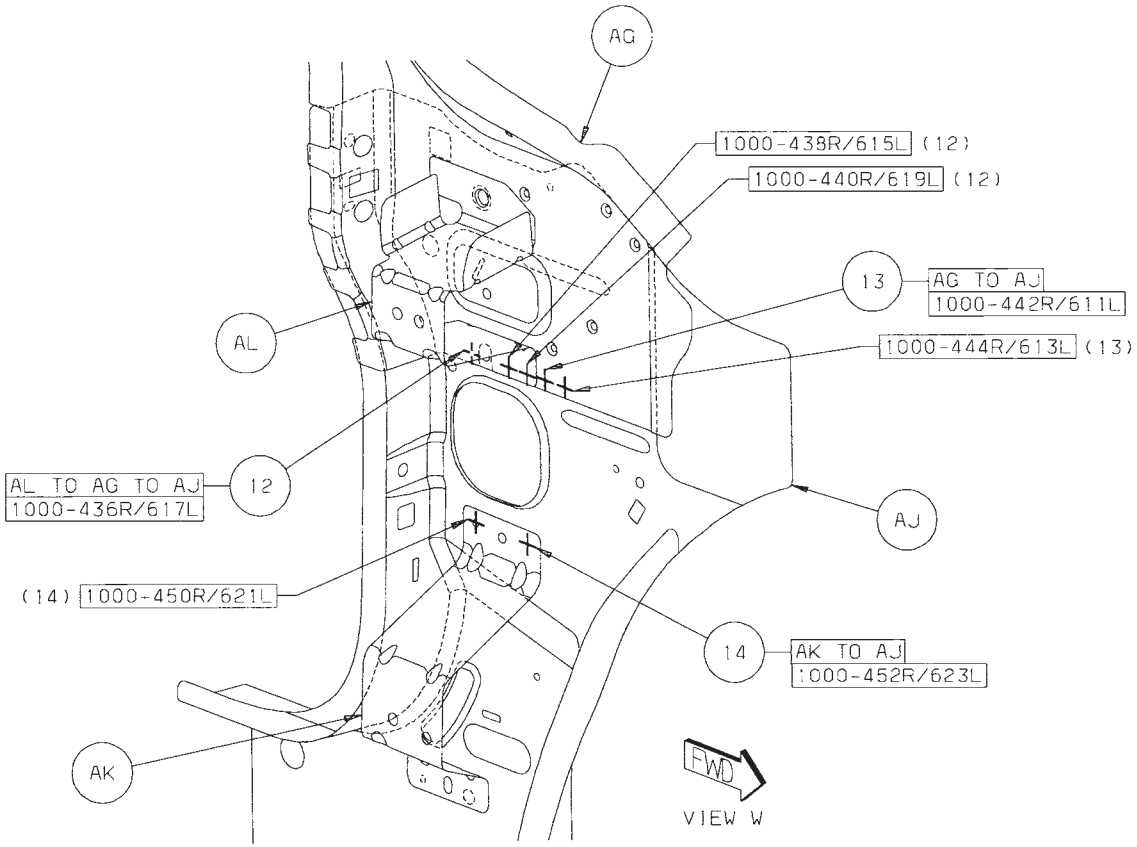

Back to Index

15 AF TO AN TO AF 3/SD S/WELDS (ORD)
16 AP TO AN TO AJ 1/SD S/WELD (ORD)
17 AP TO AJ TO AF 1/SD S/WELD (ORD)
18 AJ TO AG TO AM 4/SD S/WELDS (ORD)
19 AJ TO AF TO AM 15/SD S/WELDS (ORD)
20 AF TO AJ 1L S/WELD (ORD)
21 AF TO AJ TO AM 1L S/WELD (ORD)

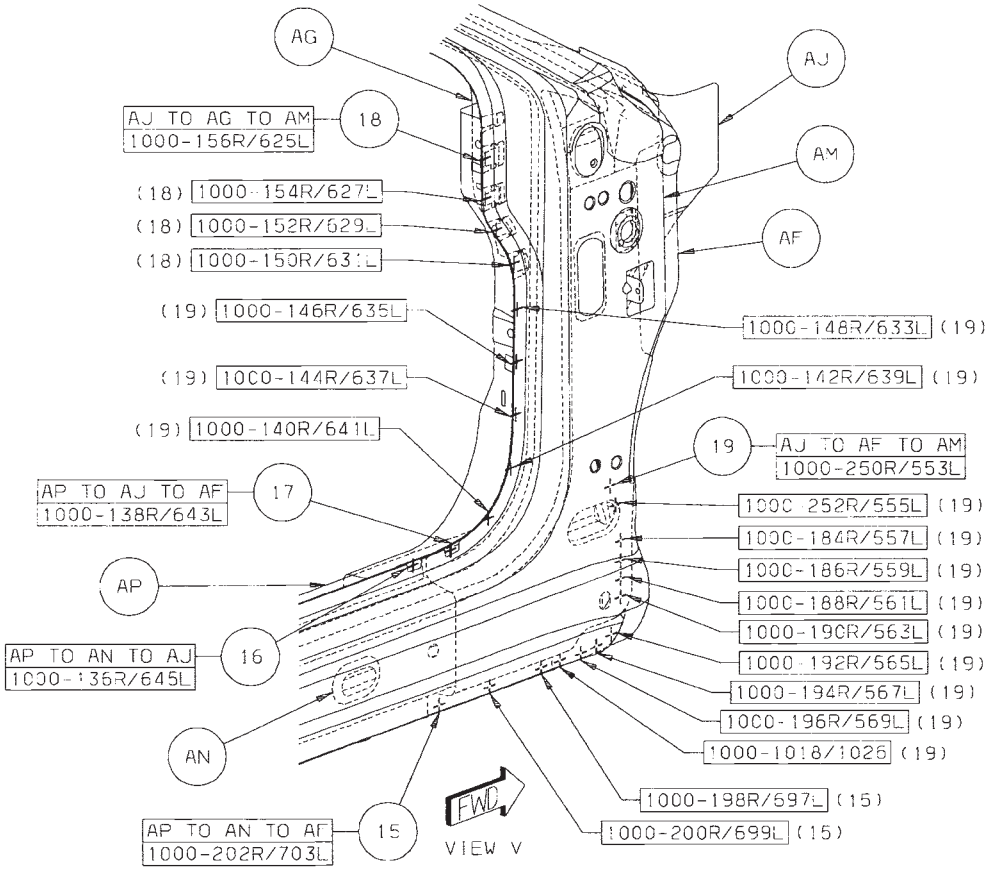

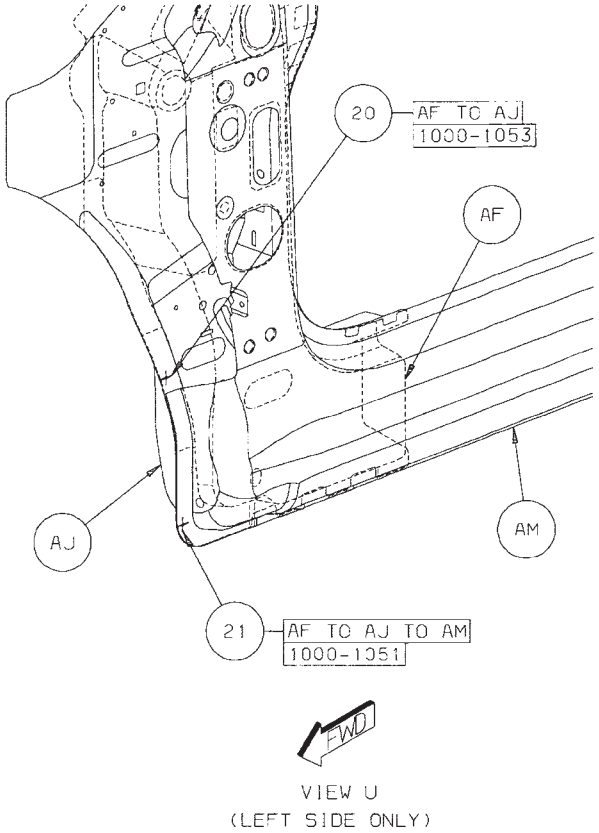

Back to Index

22 AP TO AN TO AM 27/SD S/WELDS (ORD)
23 AP TO AR TO AN 6/SD S/WELDS (ORD)

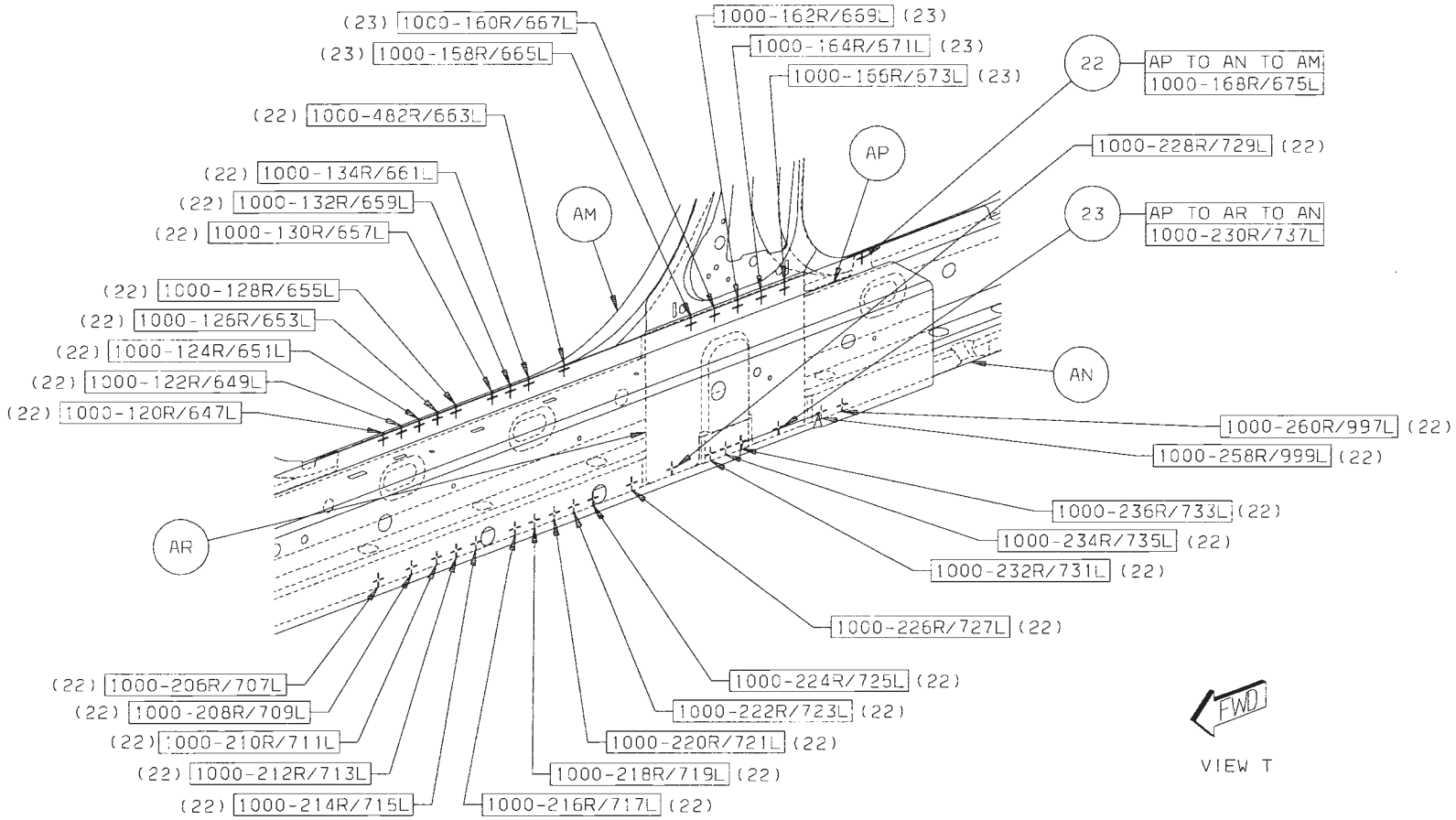

Back to Index

24 AX TO AM TO AS 1/SD S/WELD (ORD)
25 AX TO AM TO AU 2/SD S/WELDS (ORD)
26 AT TO AS TO AX 2/SD S/WELDS (ORD)
27 AT TO AS 5/SD S/WELDS (ORD)
28 AV TO AZ TO AY 4/SD S/WELDS (ORD)
29 AW TO AY TO AX 2/AD S/WELDS (ORD)
30 AW TO AY 4/SD S/WELDS (ORD)
31 AY TO AX TO AM 3/SD S/WELDS (ORD)

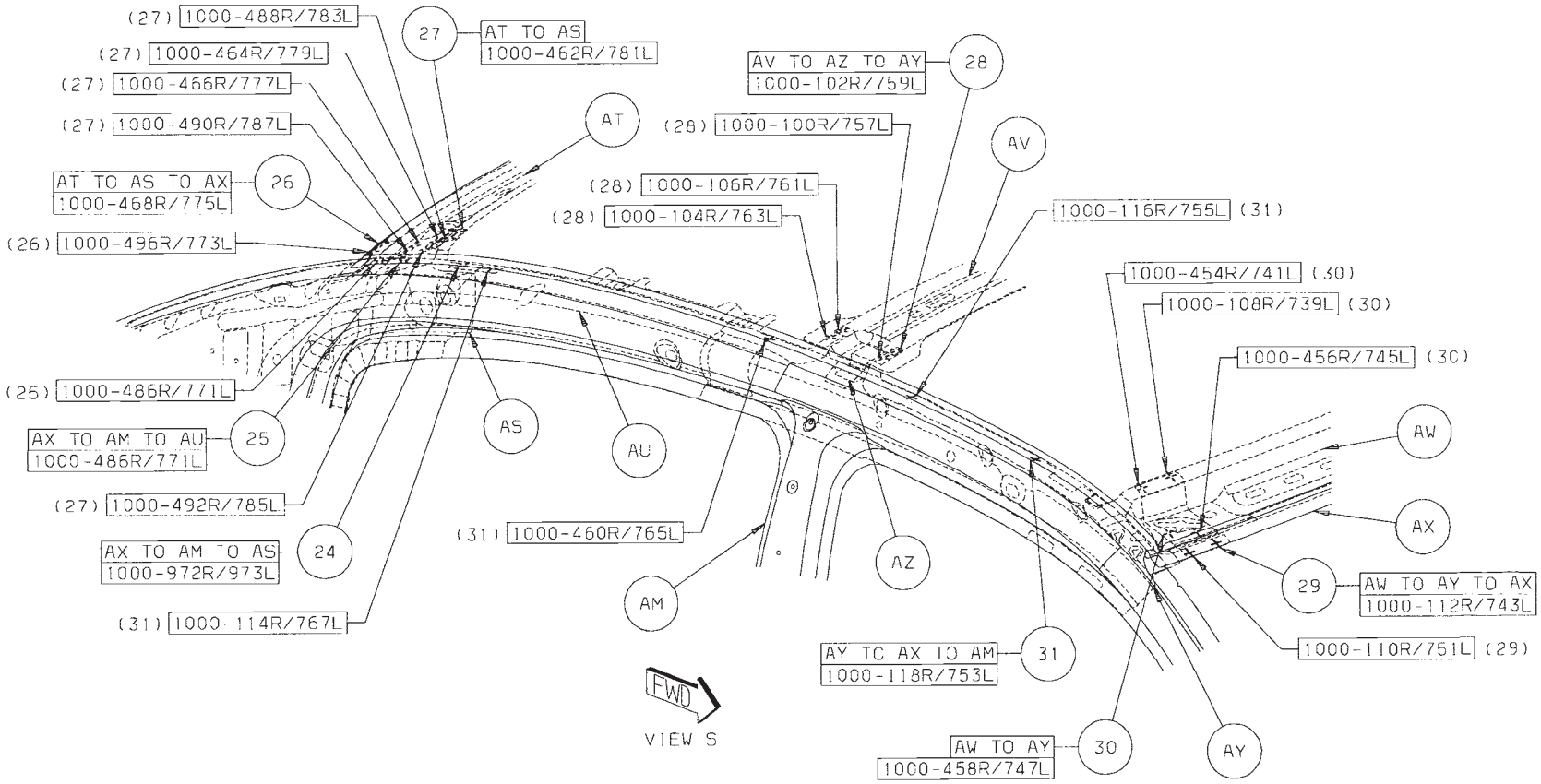

Back to Index

32 BD TO AN TO AM 8/SD S/WELDS (ORD)
33 BC TO BB TO AN 1/SD S/WELD (ORD)
34 BD TO BB TO BC 3/SD S/WELDS (ORD)
35 BA TO AM 1/SD S/WELD (ORD)
36 BD TO BC TO AM 1/SD S/WELD (ORD)

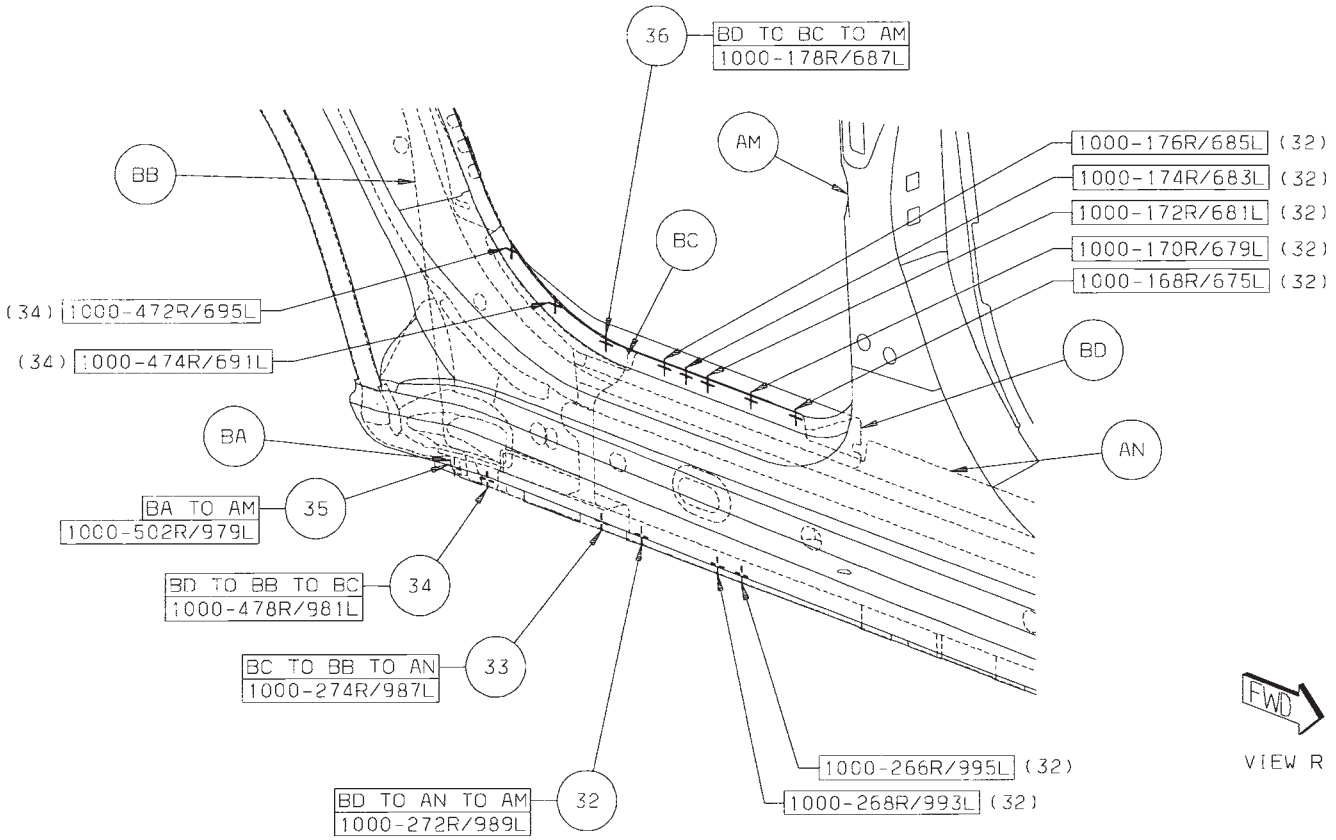

Back to Index

37 BF TO AU 7R S/WELDS (ORD)
38 BF TO AU TO BE 1R S/WELD (ORD)
39 BE TO BF 3R S/WELDS (ORD)
40 BF TO AS TO AU 4/SD S/WELDS (ORD)
41 BF TO BB 8R/7L S/WELDS (ORD)
42 BA TO BB 6R/4L S/WELDS (ORD)

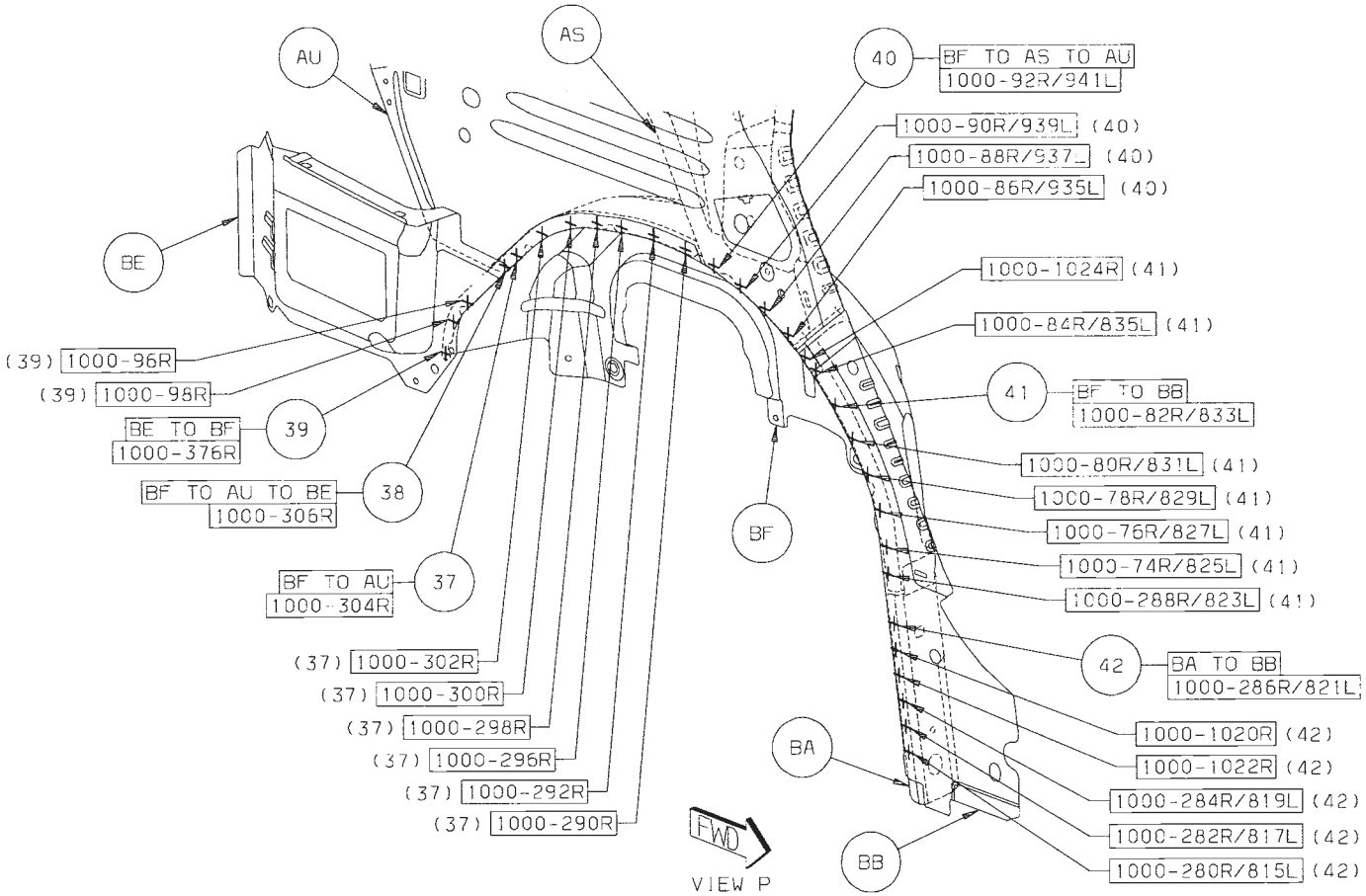

Back to Index

43 BF TO BB 1L S/WELD (ORD)
44 AU TO BF 12L S/WELDS (ORD)
45 BF TO AU TO BE 1L S/WELD (ORD)
46 BF TO BE 3L S/WELDS (ORD)

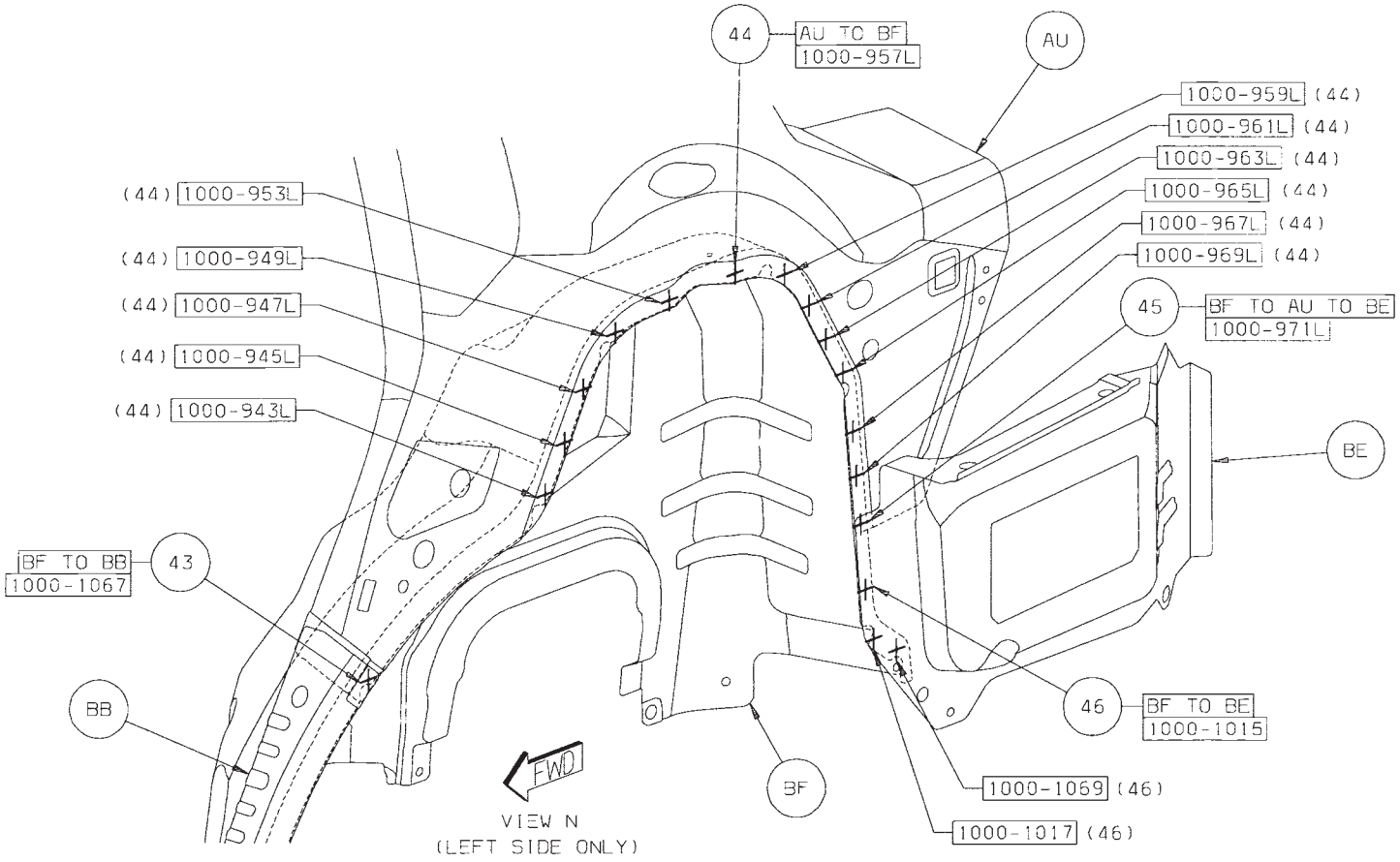

Back to Index

47 BG TO BH 4/SD S/WELDS (ORD)
48 BK TO BG TO BH 3/SD S/WELDS (ORD)
49 BK TO BH TO BJ 5/SD S/WELDS (ORD)

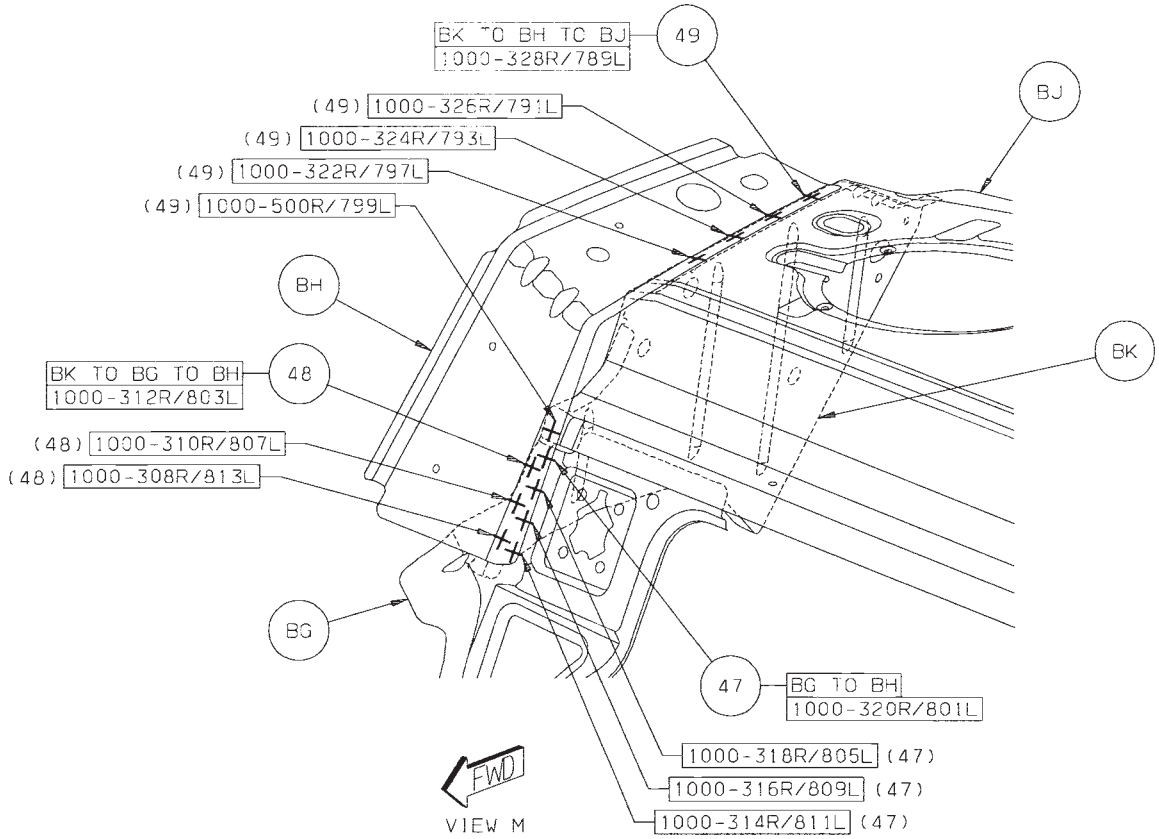

Back to Index

50 BD TO BS 6/SD S/WELDS (ORD)
51 BM TO BN 4/SD S/WELDS (ORD)
52 BL TO BN 4/SD S/WELDS (ORD)
53 BE TO BR 3/SD S/WELDS (ORD)
54 BF TO BE TO BR 7/SD S/WELDS (ORD)
55 BP TO BE 1/SD S/WELD (ORD)
56 BE TO AN 4/SD S/WELDS (ORD)

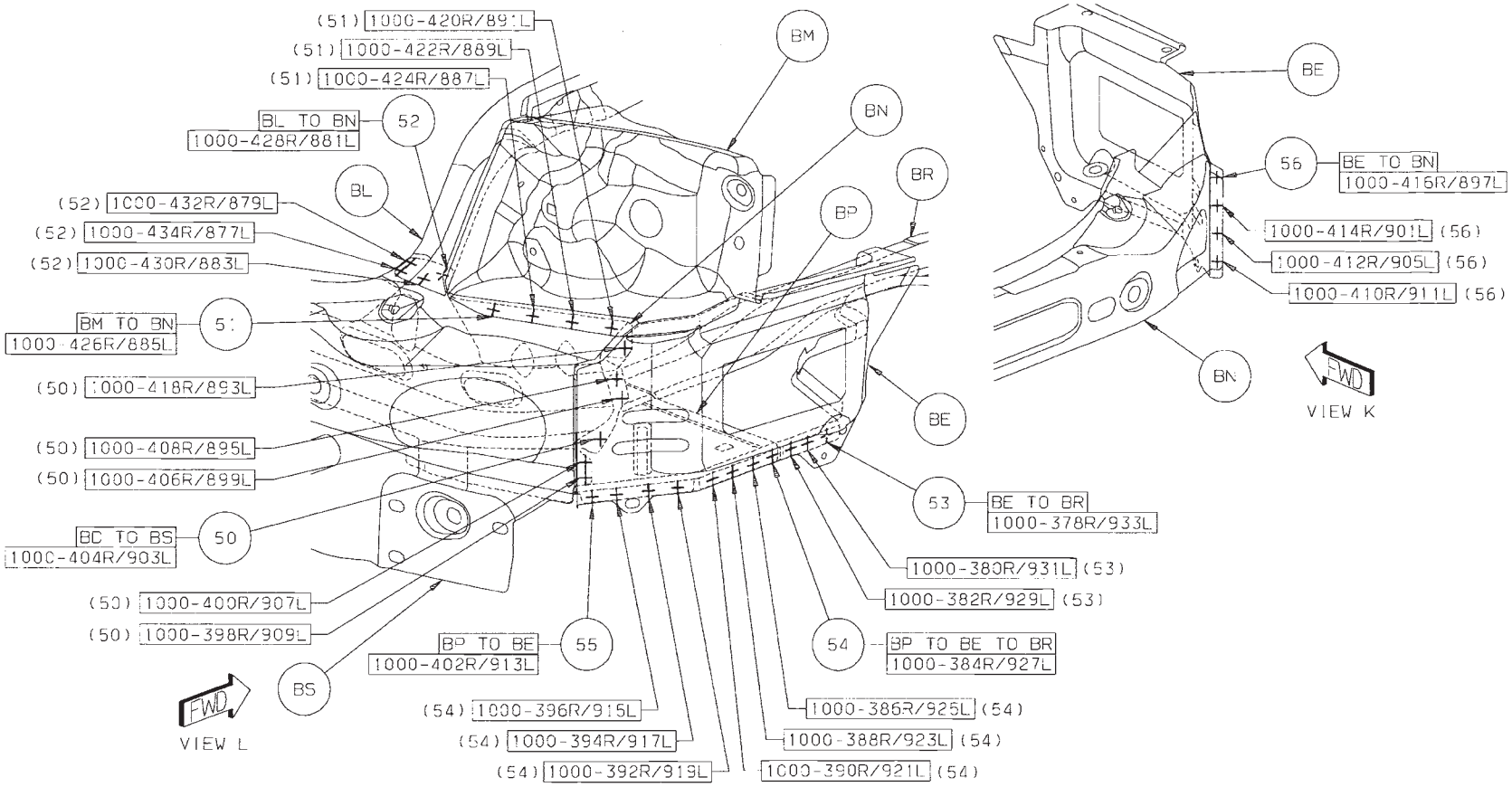

Back to Index

57 BT TO AJ 17R/15L S/WELDS (ORD)
58 BL TO BT TO AJ 3/SD S/WELDS (ORD)
59 BL TO BJ 1/SD S/WELD (ORD)
60 BL TO BT 2/SD S/WELDS (ORD)

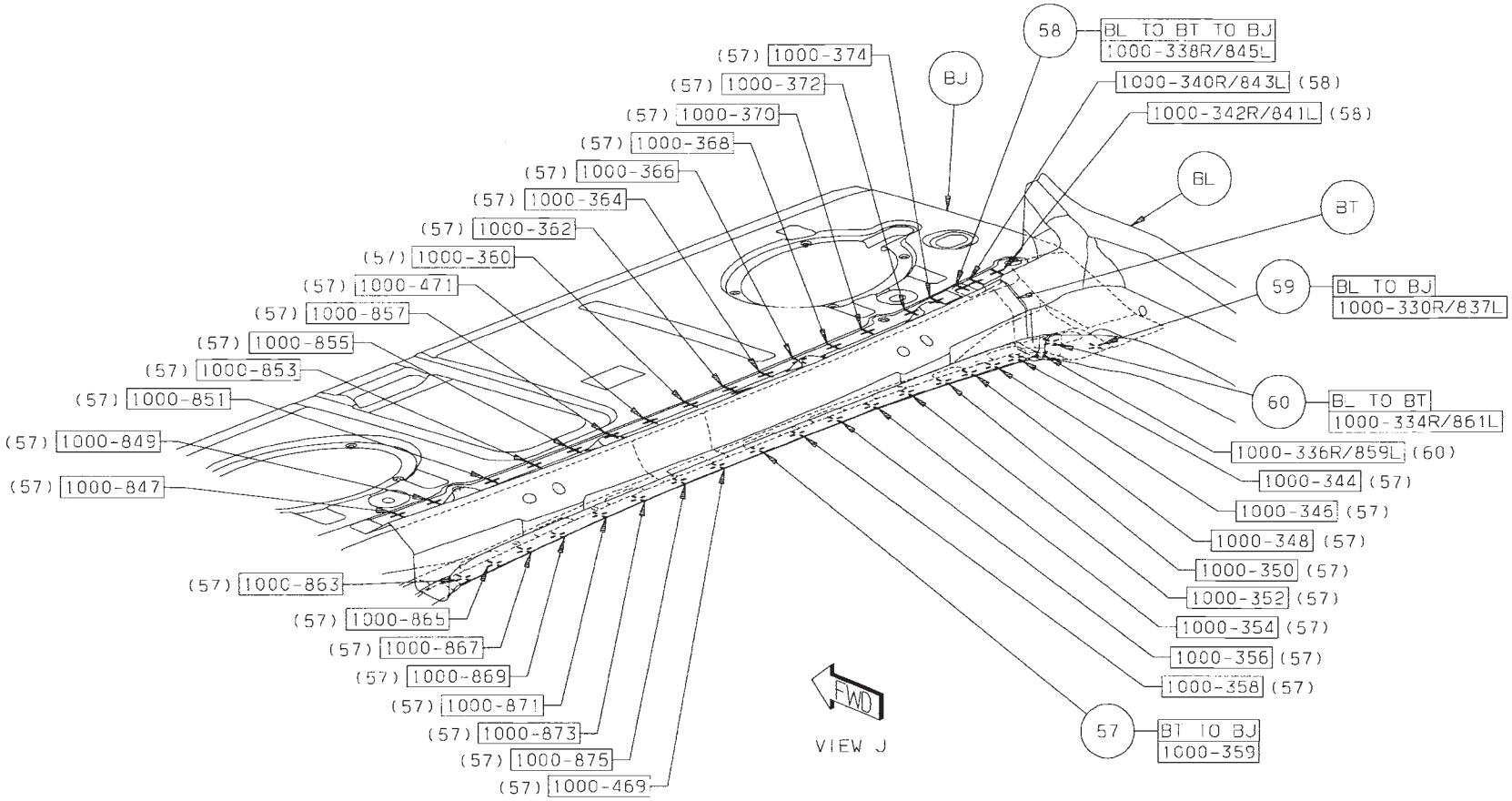

Back to Index

61 AJ TO AF 1/SD STRUC ADH
62 BL TO BT 1/SD STRUC ADH

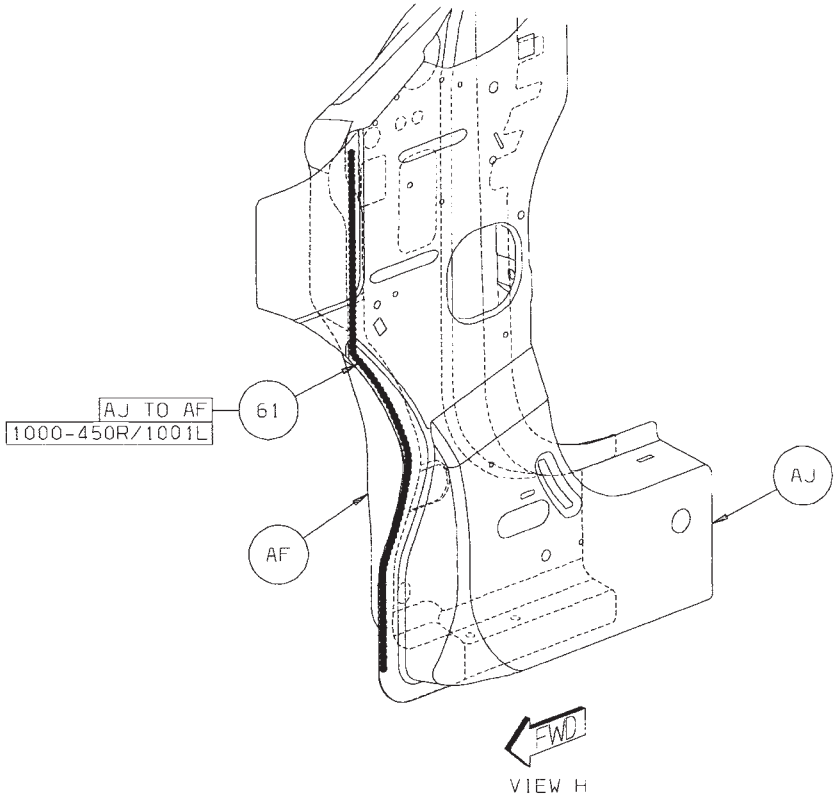

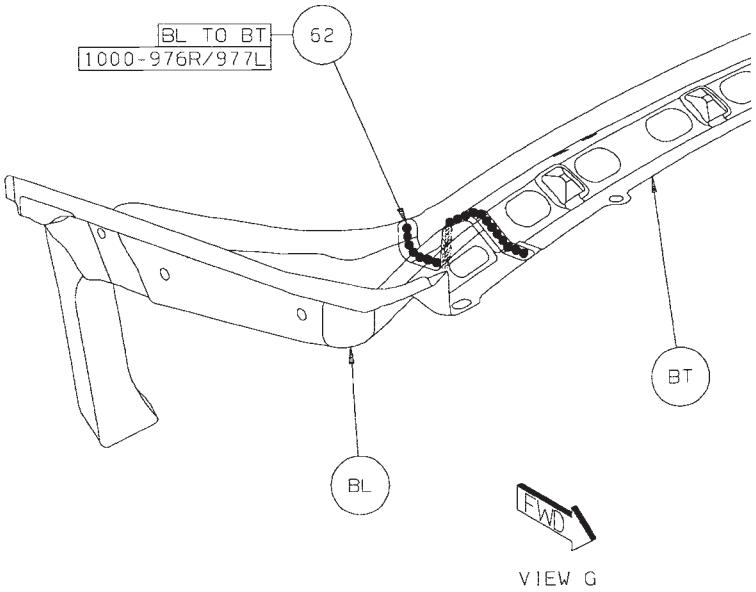

Back to Index

63 AZ TO AY 1/SD STRUC ADH
64 AZ TO AY 1/SD STRUC ADH
65 AX TO AM 1/SD STRUC ADH

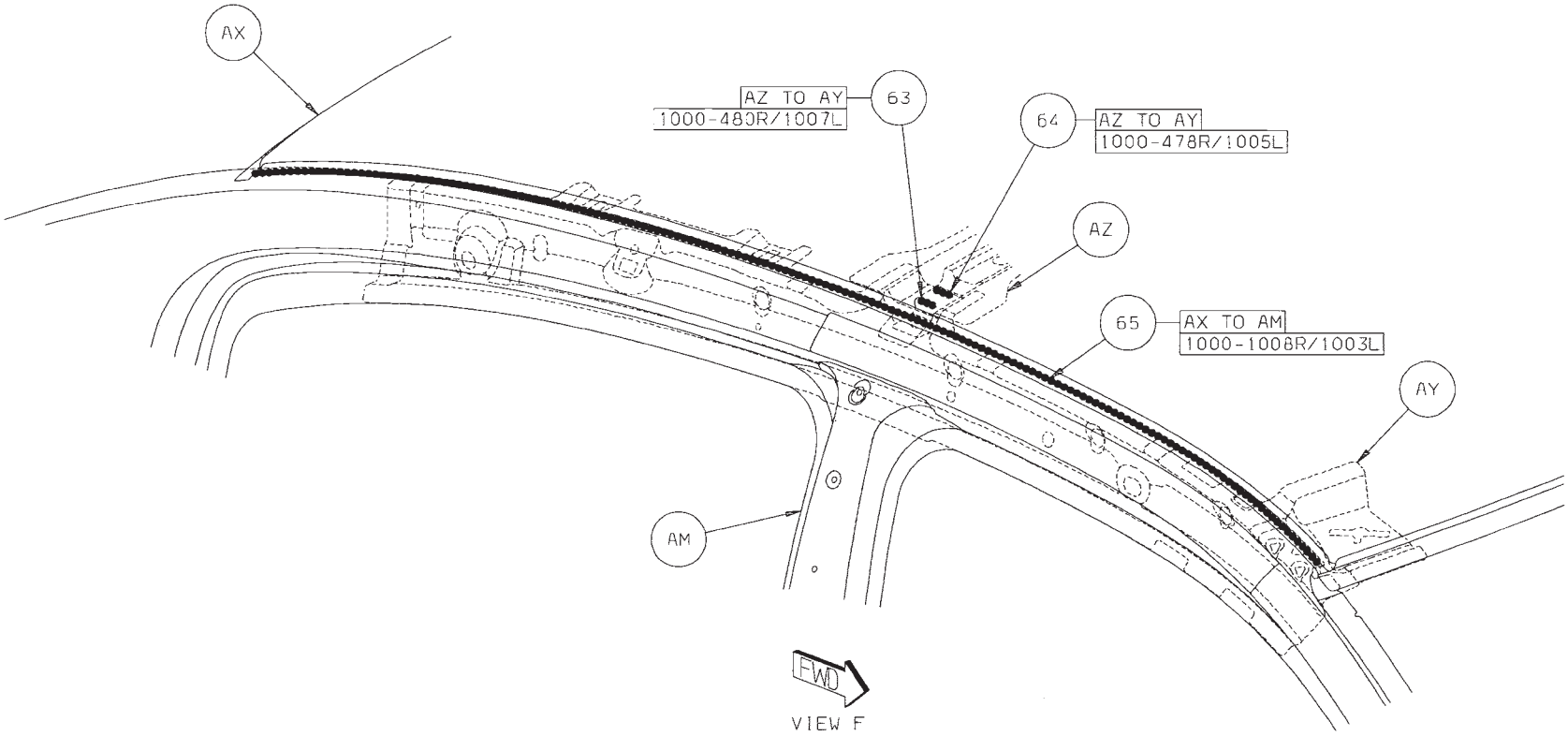

Back to Index

66 BB TO BD 1/SD STRUC ADH
67 BH TO BU 1/SD STRUC ADH

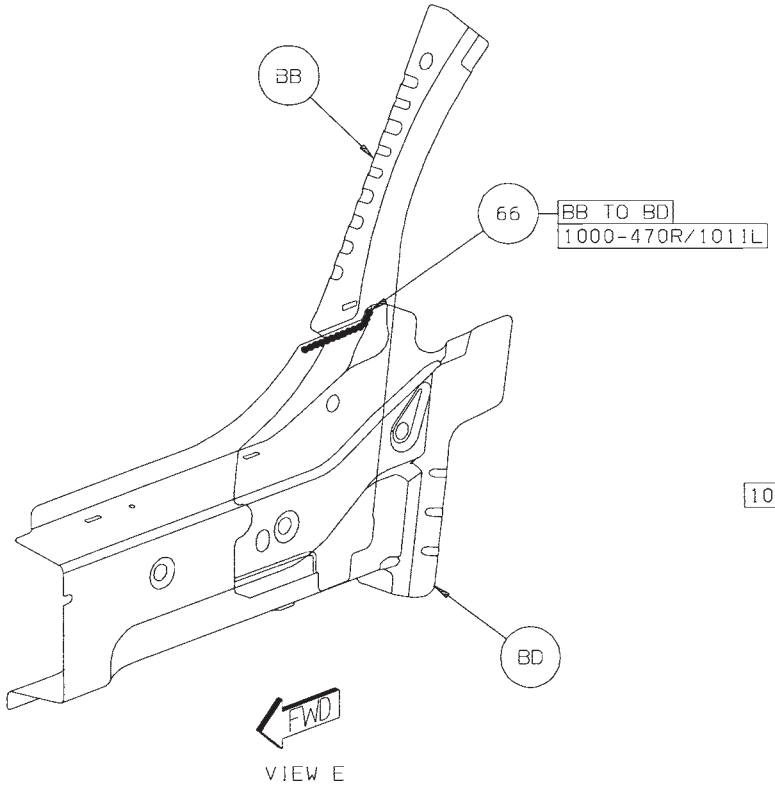

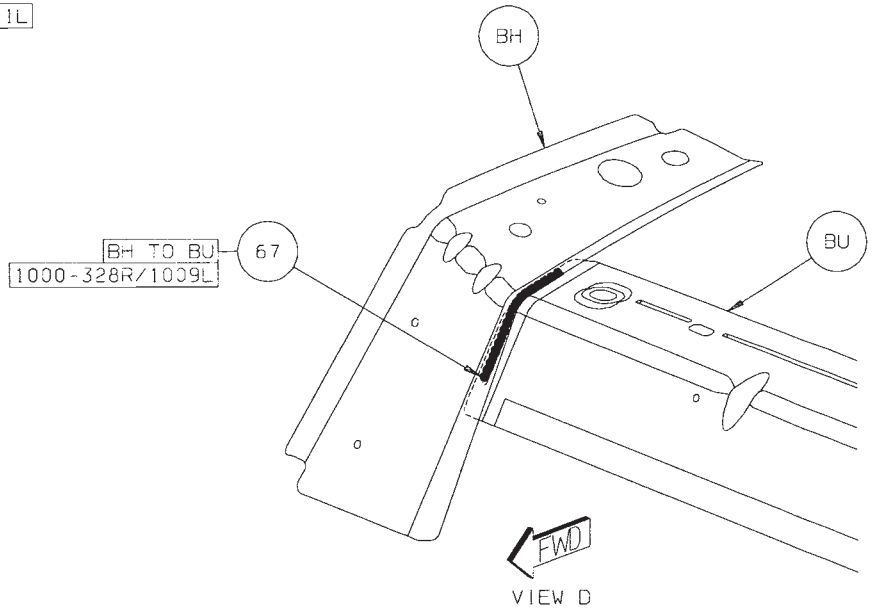

Back to Index

CHRYSLER SEBRING BODY IN WHITE COMPLETE SECTION

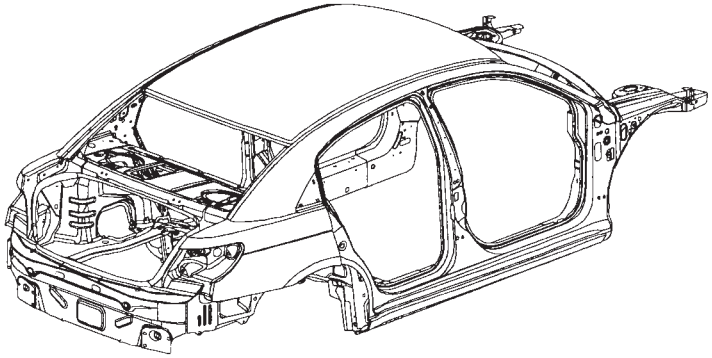

AA BEAM – UPR LOAD PATH OTR RT –
AA BEAM – UPR LOAD PATH OTR LT –
AB BEAM – LOAD PATH INR UPR RT –
AB BEAM – LOAD PATH INR UPR LT –
AC REINF – CAP –
AC REINF – CAP –
AD BRACKET – LOAD BEAM RT –
AD BRACKET – LOAD BEAM LT –
AE PANEL – HINGE PILLAR RT –
AE PANEL – HINGE PILLAR LT –
AF FRAME – WINDSHIELD OPENING SIDE INR –
AF FRAME – WINDSHIELD OPENING SIDE INR –
AG PANEL – COWL TOP UPPER –
AH PANEL – COWL SIDE RT –
AH PANEL – COWL SIDE LT –
AJ REINF – HINGE PILLAR LWR RT –
AJ REINF – HINGE PILLAR LWR LT –
AK REINF – HINGE PILLAR UPR RT –
AK REINF – HINGE PILLAR UPR RT –
AL PANEL – BODY SIDE APERTURE RT –
AL PANEL – BODY SIDE APERTURE LT –
AM SILL – OTR RT –
AM SILL – OTR LT –
AN SILL – FRT FLOOR PAN RT –
AN SILL – FRT FLOOR PAN LT –
AP PANEL – B-PILLAR INR RT –
AP PANEL – B-PILLAR INR LT –
AR PANEL – QTR INR UPR RT –
AR PANEL – QTR INR UPR LT –
AS HEADER – RR –
AT BOW – B-PILLAR UPR –
AT BOW – B-PILLAR LWR –
AV HEADER – ROOF FRT –
AW PANEL – ROOF OTR –
AX RAIL – ROOF SIDE INR INR RT –
AX RAIL – ROOF SIDE INR INR LT –
AY PLATE – SIDE SILL RT –
AY PLATE – SIDE SILL LT –
AZ EXTENSION – QTR PANEL LWR RT –
AZ EXTENSION – QTR PANEL LWR LT –
BA REINF – C-PILLAR LWR RT –
BA REINF – C-PILLAR LWR LT –
BB SILL – RR FLOOR SIDEMEMBER RT –
BB SILL – RR FLOOR SIDEMEMBER LT –
BC EXTENSION – BODY SIDE RT –
BC EXTENSION – BODY SIDE LT –
BD PANEL – RR OTR RT –
BD PANEL – RR OTR LT –
BE PANEL – RR WHEELHOUSE INR FRT RT –
BE PANEL – RR WHEELHOUSE INR FRT LT –
BF REINF – SHELF TO WHEELHOUSE –
BF REINF – SHELF TO WHEELHOUSE –
BG REINF – SHELF EXTENSION RT –
BG REINF – SHELF EXTENSION LT –
BH PANEL – SHELF –
BJ SUPPORT – RR SHELF PANEL TO WHEELHOUSE FRT –
BJ SUPPORT – RR SHELF PANEL TO WHEELHOUSE FRT –
BK TROUGH – QTR OTR PANEL DRAIN RT –
BK TROUGH – QTR OTR PANEL DRAIN LT –
BL EXTENSION – QTR PANEL TAIL LAMP RT –
BL EXTENSION – QTR PANEL TAIL LAMP LT –
BM PANEL – RR CLOSURE OTR – NONE
BN EXTENSION – RR FLOOR SIDEMEMBR RT –
BN EXTENSION – RR FLOOR SIDEMEMBR LT –
BP SIDEMEMBER – RR FLOOR UPR RT –
BP SIDEMEMBER – RR FLOOR UPR LT –
BR PANEL – RR CLOSURE INR –
BS REINF – SHELF PANEL RR –
BT BRACKET – ROOF W/SUNROOF –
BT BRACKET – ROOF W/SUNROOF –
BU REINF – RR SHELF PANEL FRT –

Back to Index

PARTS IDENTIFICATION LEGEND, OVERVIEW 35

AA BEAM – UPR LOAD PATH OTR RT –
AA BEAM – UPR LOAD PATH OTR LT –
AB BEAM – LOAD PATH INR UPR RT –
AB BEAM – LOAD PATH INR UPR LT –
AC REINF – CAP –
AC REINF – CAP –
AD BRACKET – LOAD BEAM RT –
AD BRACKET – LOAD BEAM LT –
AE PANEL – HINGE PILLAR RT –
AE PANEL – HINGE PILLAR LT –
AF FRAME – WINDSHIELD OPENING SIDE INR –
AF FRAME – WINDSHIELD OPENING SIDE INR –
AG PANEL – COWL TOP UPPER –
AH PANEL – COWL SIDE RT –
AH PANEL – COWL SIDE LT –
AJ REINF – HINGE PILLAR LWR RT –
AJ REINF – HINGE PILLAR LWR LT –
AK REINF – HINGE PILLAR UPR RT –
AK REINF – HINGE PILLAR UPR RT –
AL PANEL – BODY SIDE APERTURE RT –
AL PANEL – BODY SIDE APERTURE LT –
AM SILL – OTR RT –
AM SILL – OTR LT –
AN SILL – FRT FLOOR PAN RT –
AN SILL – FRT FLOOR PAN LT –
AP PANEL – B-PILLAR INR RT –
AP PANEL – B-PILLAR INR LT –
AR PANEL – QTR INR UPR RT –
AR PANEL – QTR INR UPR LT –
AS HEADER – RR –
AT BOW – B-PILLAR UPR –
AT BOW – B-PILLAR LWR –
AV HEADER – ROOF FRT –
AW PANEL – ROOF OTR –
AX RAIL – ROOF SIDE INR INR RT –
AX RAIL – ROOF SIDE INR INR LT –
AY PLATE – SIDE SILL RT –
AY PLATE – SIDE SILL LT –
AZ EXTENSION – QTR PANEL LWR RT –
AZ EXTENSION – QTR PANEL LWR LT –
BA REINF – C-PILLAR LWR RT –
BA REINF – C-PILLAR LWR LT –
BB SILL – RR FLOOR SIDEMEMBER RT –
BB SILL – RR FLOOR SIDEMEMBER LT –
BC EXTENSION – BODY SIDE RT –
BC EXTENSION – BODY SIDE LT –
BD PANEL – RR OTR RT –
BD PANEL – RR OTR LT –
BE PANEL – RR WHEELHOUSE INR FRT RT –
BE PANEL – RR WHEELHOUSE INR FRT LT –
BF REINF – SHELF TO WHEELHOUSE –
BF REINF – SHELF TO WHEELHOUSE –
BG REINF – SHELF EXTENSION RT –
BG REINF – SHELF EXTENSION LT –
BH PANEL – SHELF –
BJ SUPPORT – RR SHELF PANEL TO WHEELHOUSE FRT –
BJ SUPPORT – RR SHELF PANEL TO WHEELHOUSE FRT –
BK TROUGH – QTR OTR PANEL DRAIN RT –
BK TROUGH – QTR OTR PANEL DRAIN LT –
BL EXTENSION – QTR PANEL TAIL LAMP RT –
BL EXTENSION – QTR PANEL TAIL LAMP LT –
BM PANEL – RR CLOSURE OTR – NONE
BN EXTENSION – RR FLOOR SIDEMEMBR RT –
BN EXTENSION – RR FLOOR SIDEMEMBR LT –
BP SIDEMEMBER – RR FLOOR UPR RT –
BP SIDEMEMBER – RR FLOOR UPR LT –
BR PANEL – RR CLOSURE INR –
BS REINF – SHELF PANEL RR –
BT BRACKET – ROOF W/SUNROOF –
BT BRACKET – ROOF W/SUNROOF –
BU REINF – RR SHELF PANEL FRT –

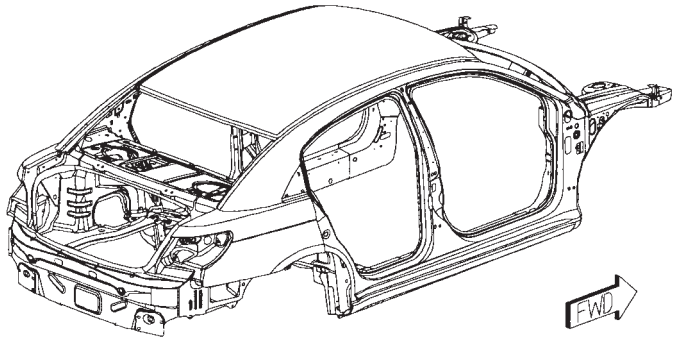

Back to Index

WELD LAYOUT LOCATION GUIDE

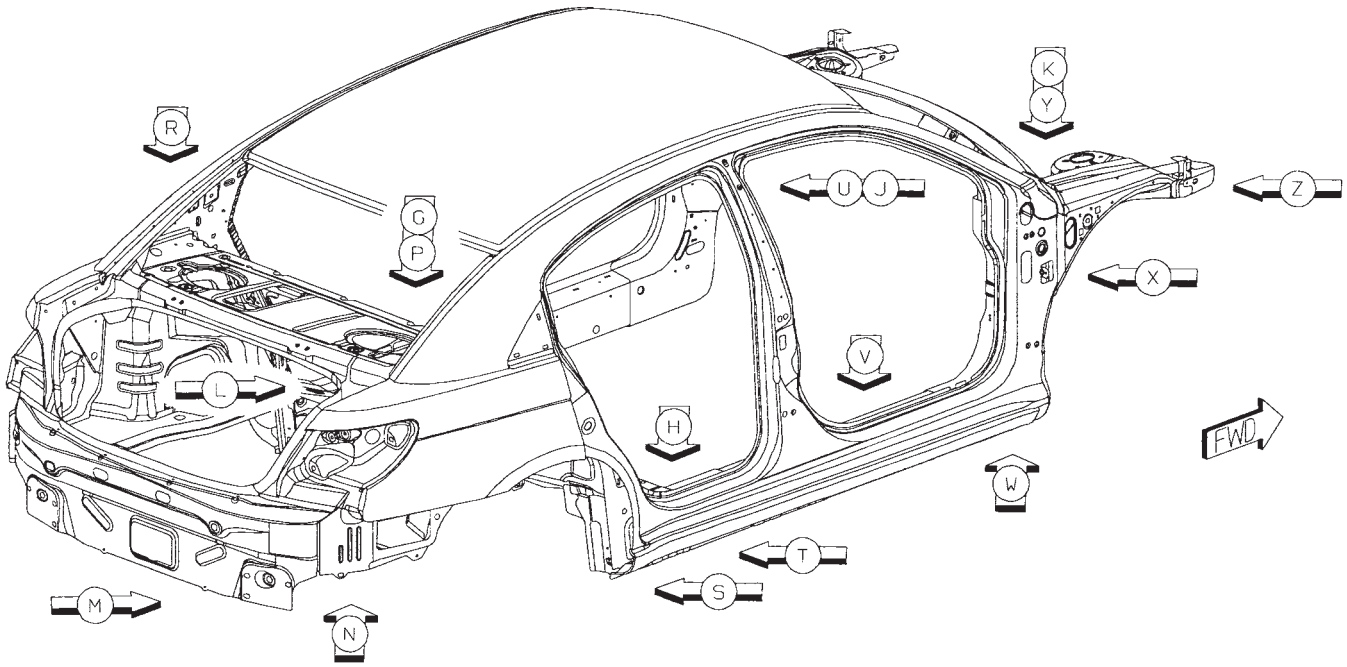

Back to Index

01 AC TO AB TO AA 5/SD S/WELDS (ORD)
02 AB TO AA 32R/31L S/WELDS (ORD)
03 AD TO AB TO AA 2/SD S/WELDS (ORD)

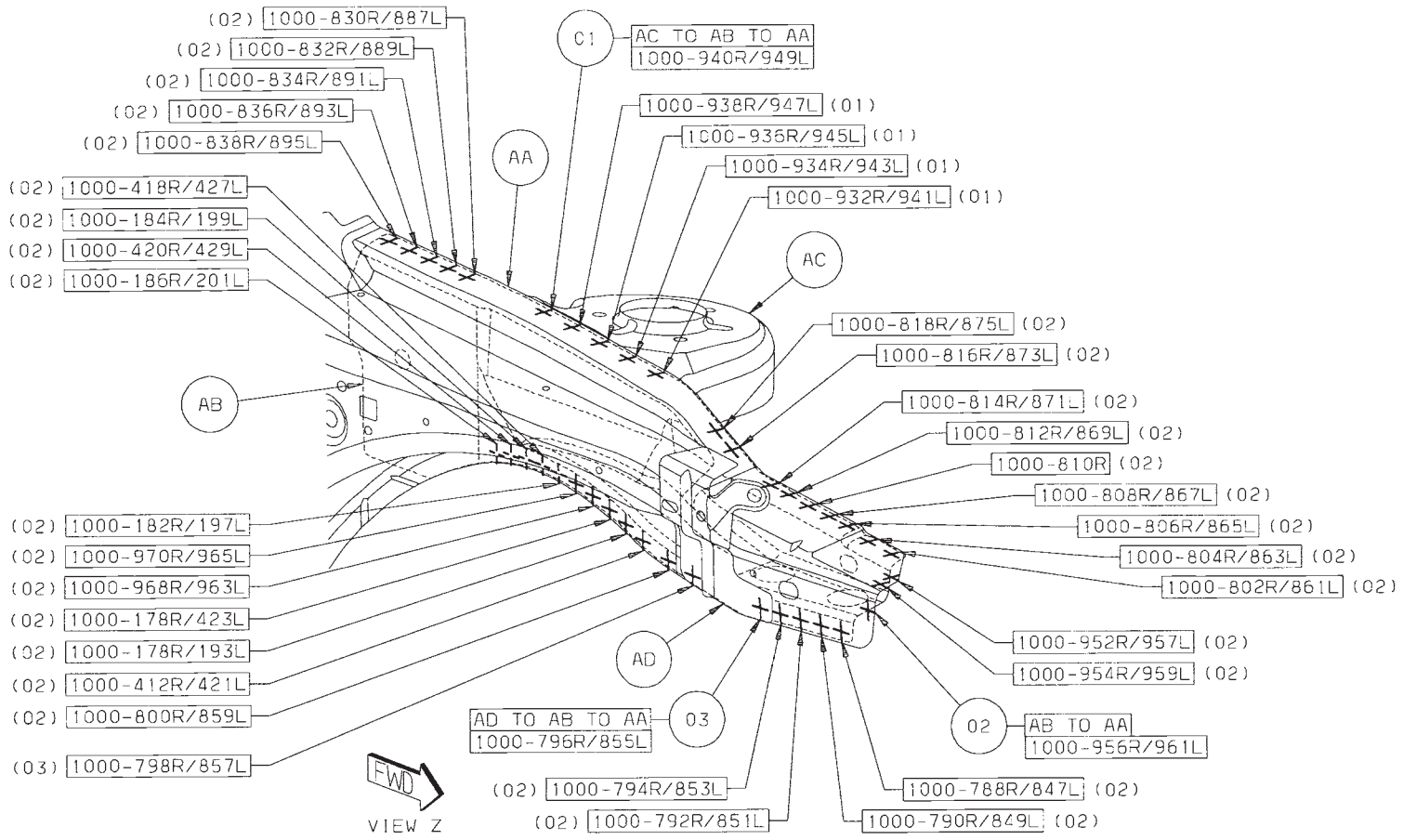

Back to Index

04 AA TO AH 2/SD S/WELDS (ORD)
05 AB TO AA TO AH 2/SD S/WELDS (ORD)
06 AH TO AF TO AE 2/SD S/WELDS (CRT)
07 AG TO AF TO AE 2/SD S/WELDS (CRT)
08 AA TO AH TO AE 2/SD S/WELDS (ORD)
09 AH TO AE 4/SD S/WELDS (ORD)

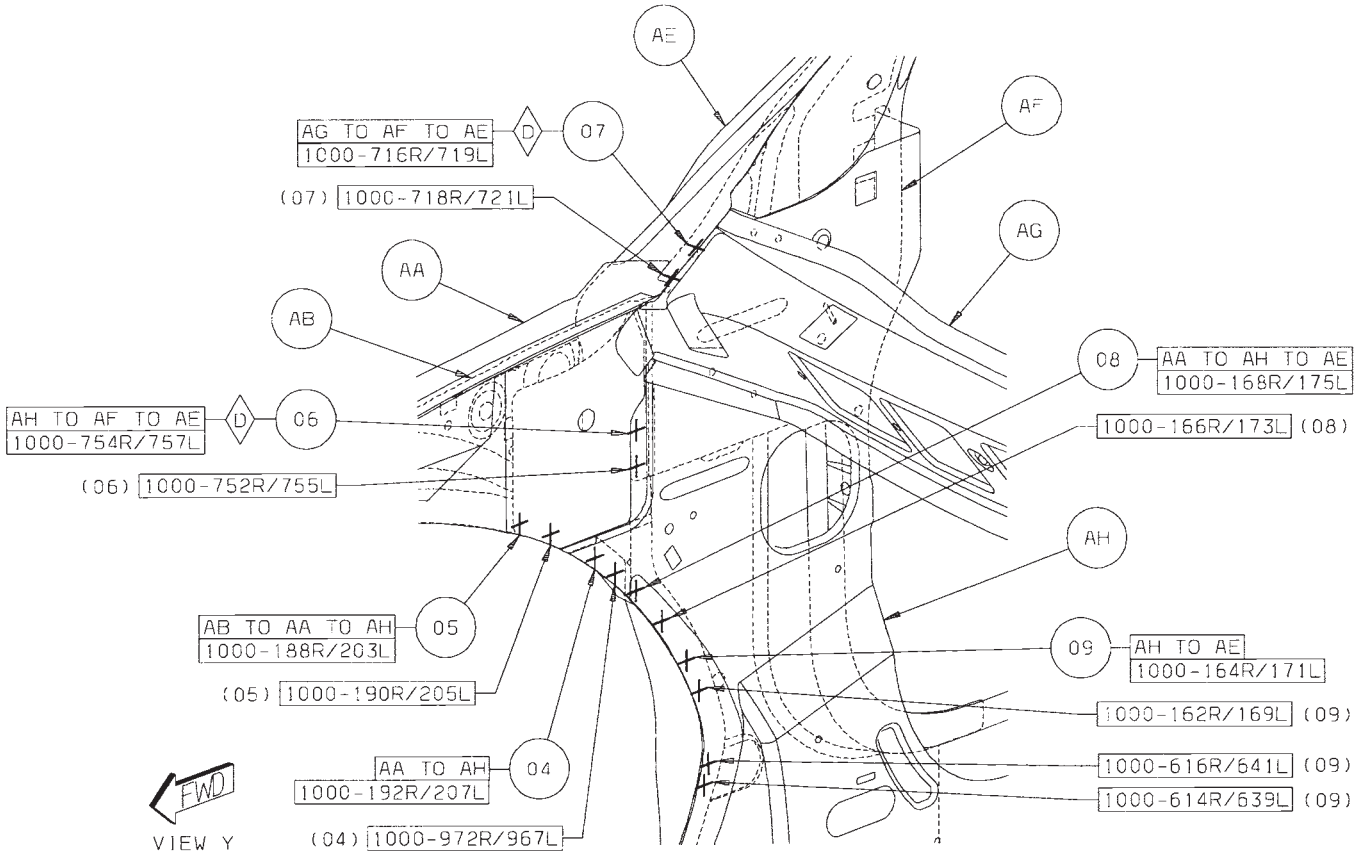

Back to Index

10 AK TO AF TO AH 3/SD S/WELDS (ORD)
11 AF TO AH 2/SD S/WELDS (ORD)
12 AJ TO AH 2/SD S/WELDS (ORD)

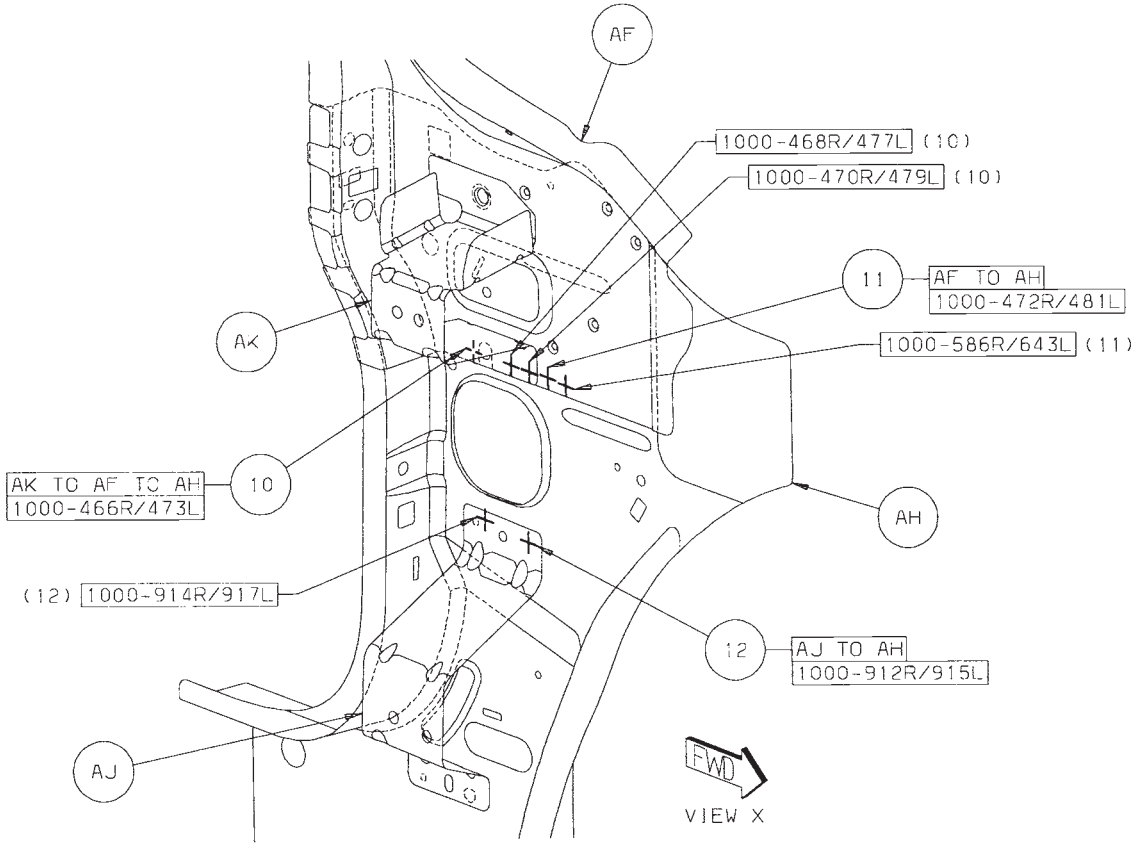

Back to Index

13 AN TO AM TO AE 3/SD S/WELDS (ORD)
14 AN TO AM TO AH 1/SD S/WELD (ORD)
15 AN TO AH TO AE 1/SD S/WELD (ORD)
16 AH TO AF TO AL 4/SD SWELDS (ORD)
17 AH TO AE TO AL 15/SD S/WELDS (ORD)

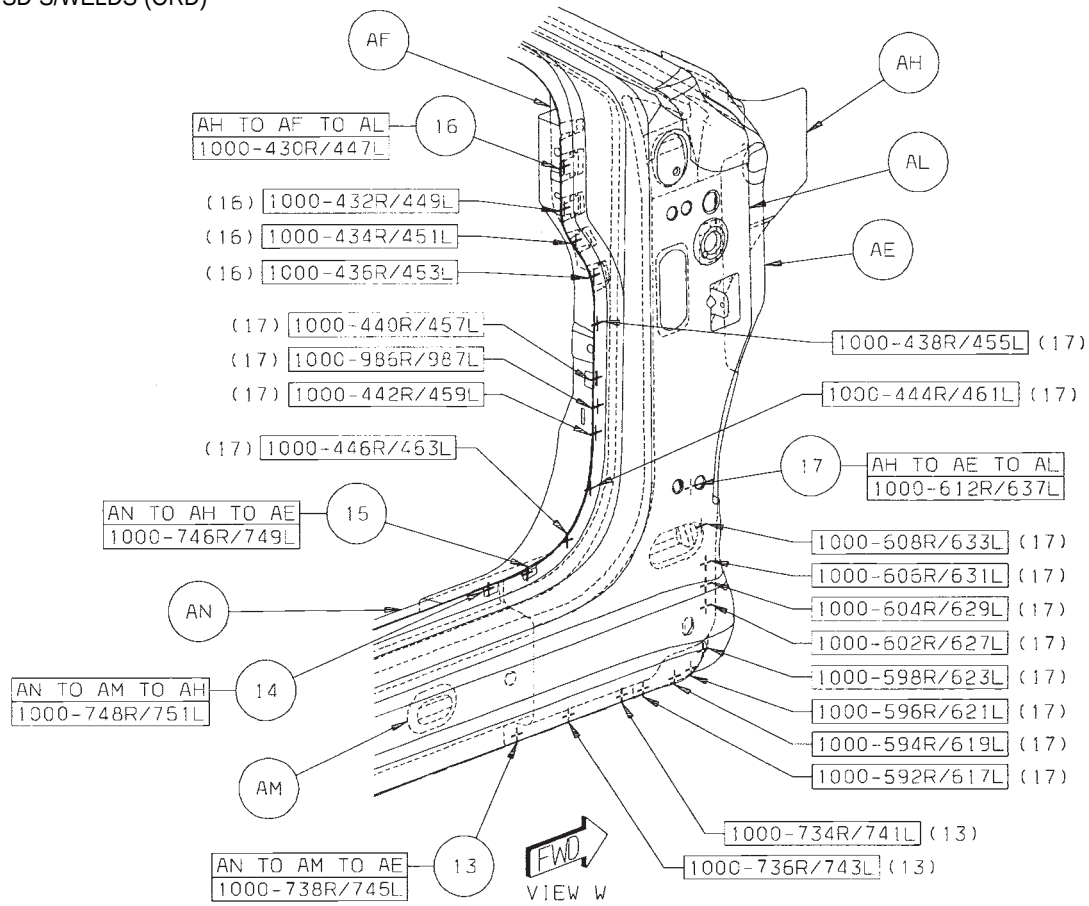

Back to Index

18 AN TO AM TO AL 25/SD S/WELDS (ORD)
19 AN TO AP TO AM 7/SD S/WELDS (ORD)

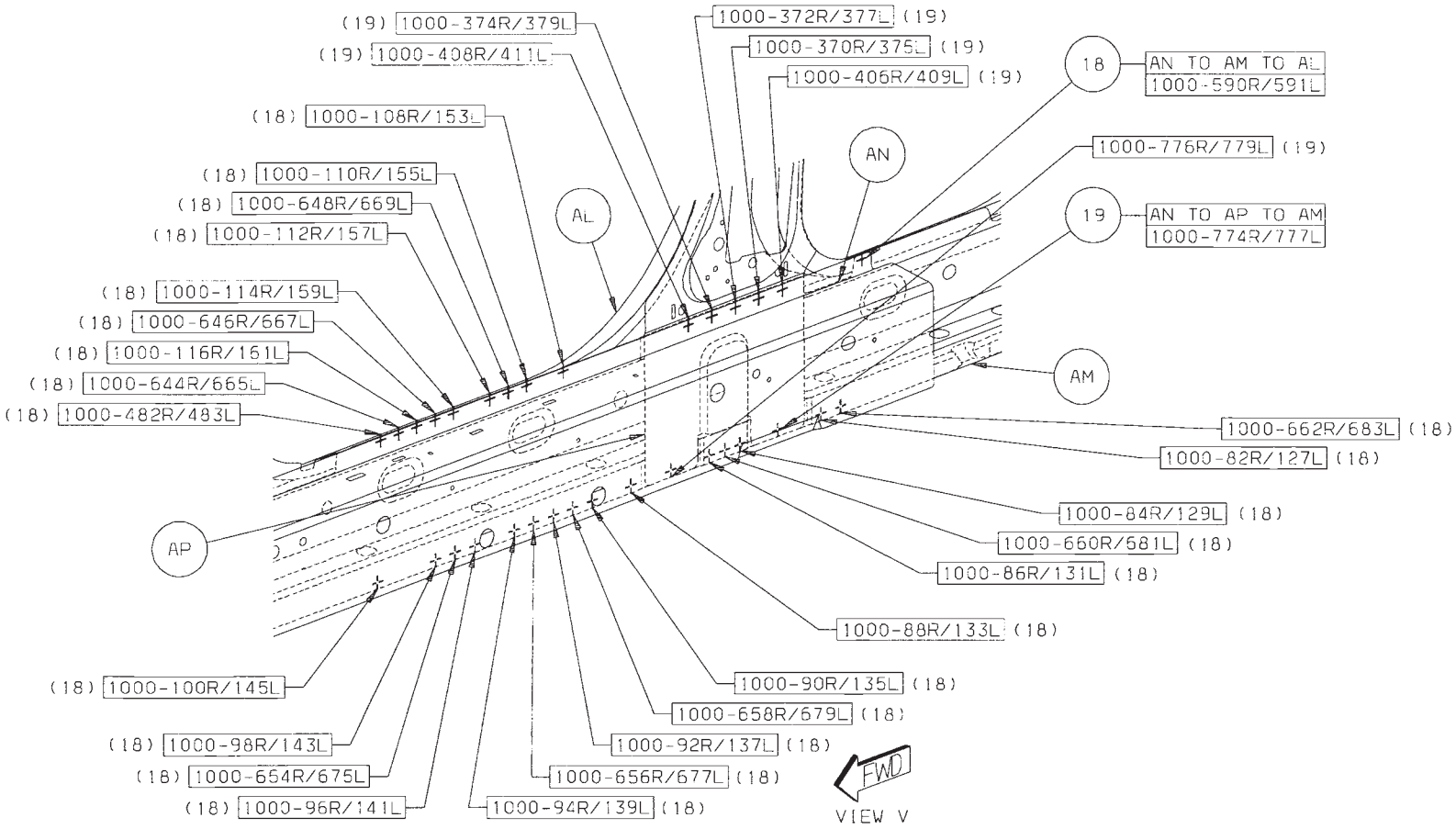

Back to Index

20 AS TO AR TO AV 1/SD S/WELD (ORD)
21 AS TO AR 3/SD S/WELDS (ORD)
22 AT TO AX TO AW 4/SD S/WELDS (ORD)
23 AU TO AV TO AW 2/SD S/WELDS (ORD)
24 AU TO AW 4/SD S/WELDS (ORD)
25 AW TO AV TO AL 4/SD S/WELDS (ORD)

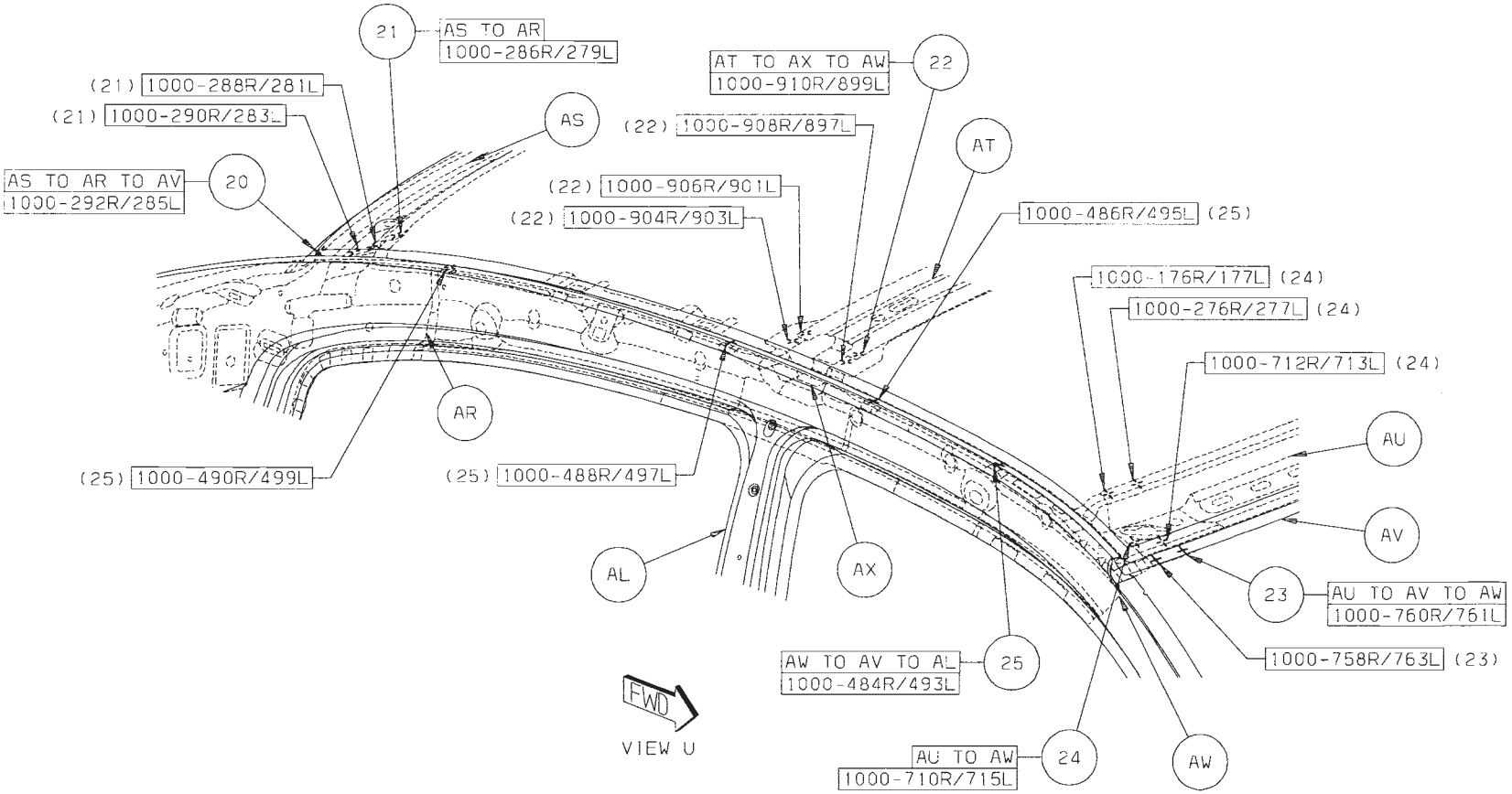

Back to Index

26 BB TO AM TO AL 7/SD S/WELDS (ORD)
27 BB TO BA TO AM 2/SD S/WELDS (ORD)
28 BB TO AZ TO BA 3/SD S/WELDS (ORD)
29 AY TO AL 1/SD S/WELD (ORD)
30 BB TO BA TO AL 1/SD S/WELD (ORD)

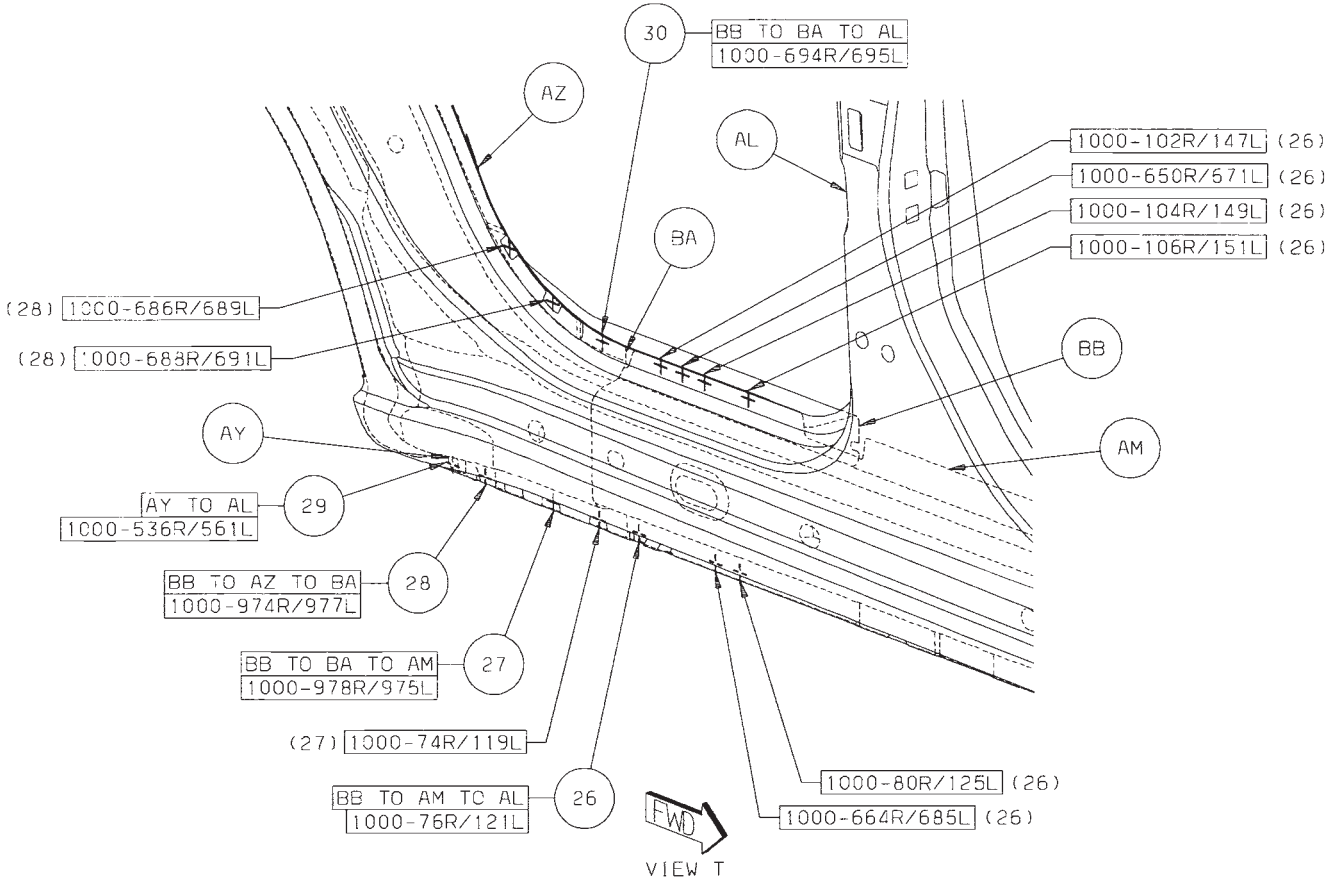

Back to Index

31 BE TO BD 8R S/WELDS (ORD)
32 BC TO BE 3/SD S/WELDS (ORD)
33 BE TO AR TO BD 4/SD S/WELDS (ORD)
34 BE TO AZ TO BD 2/SD S/WELDS (ORD)
35 BE TO AZ 6/SD S/WELDS (ORD)
36 AY TO AZ 6/SD S/WELDS (ORD)

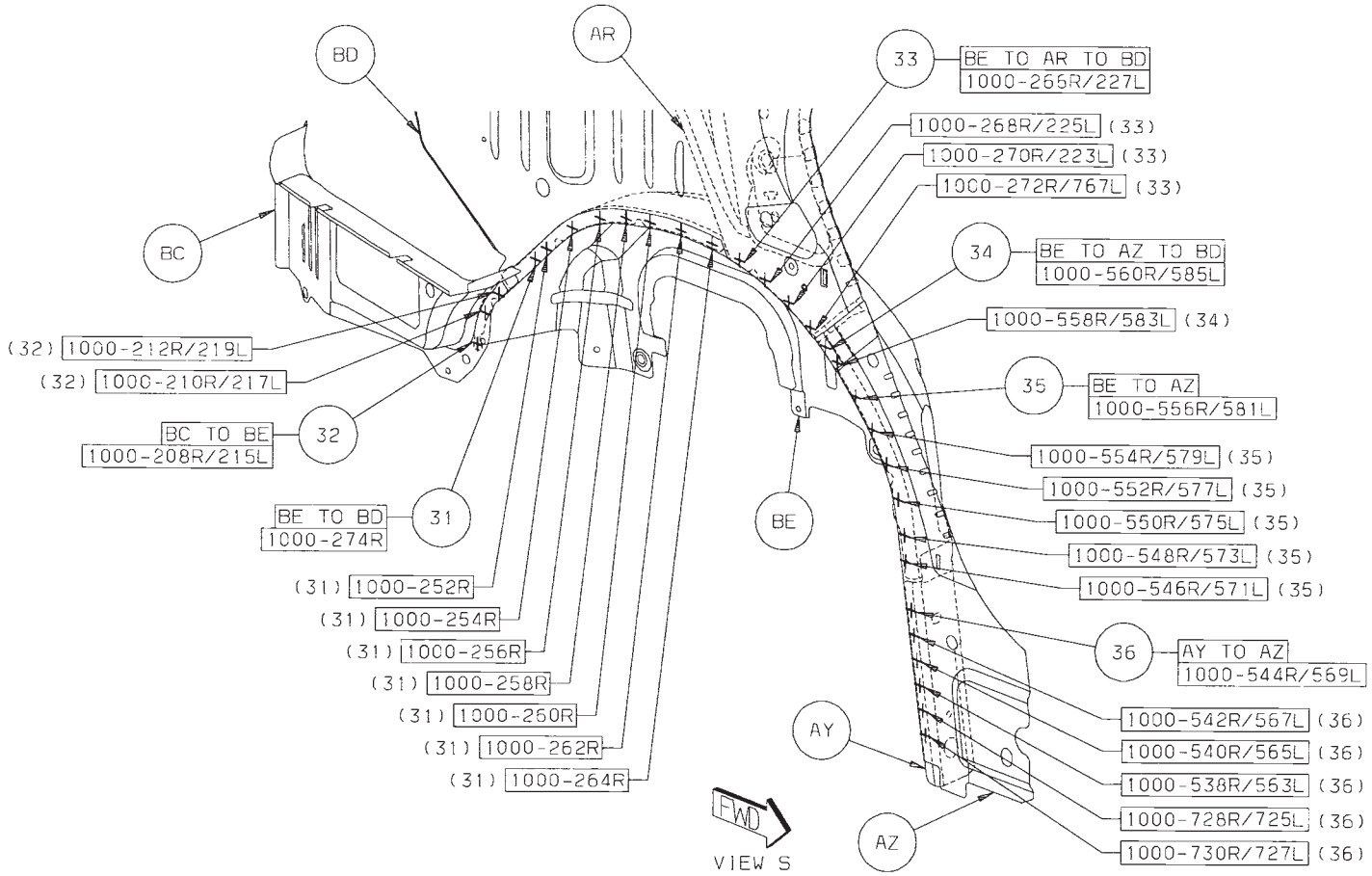

Back to Index

37 BE TO BD 13L S/WELDS (ORD)

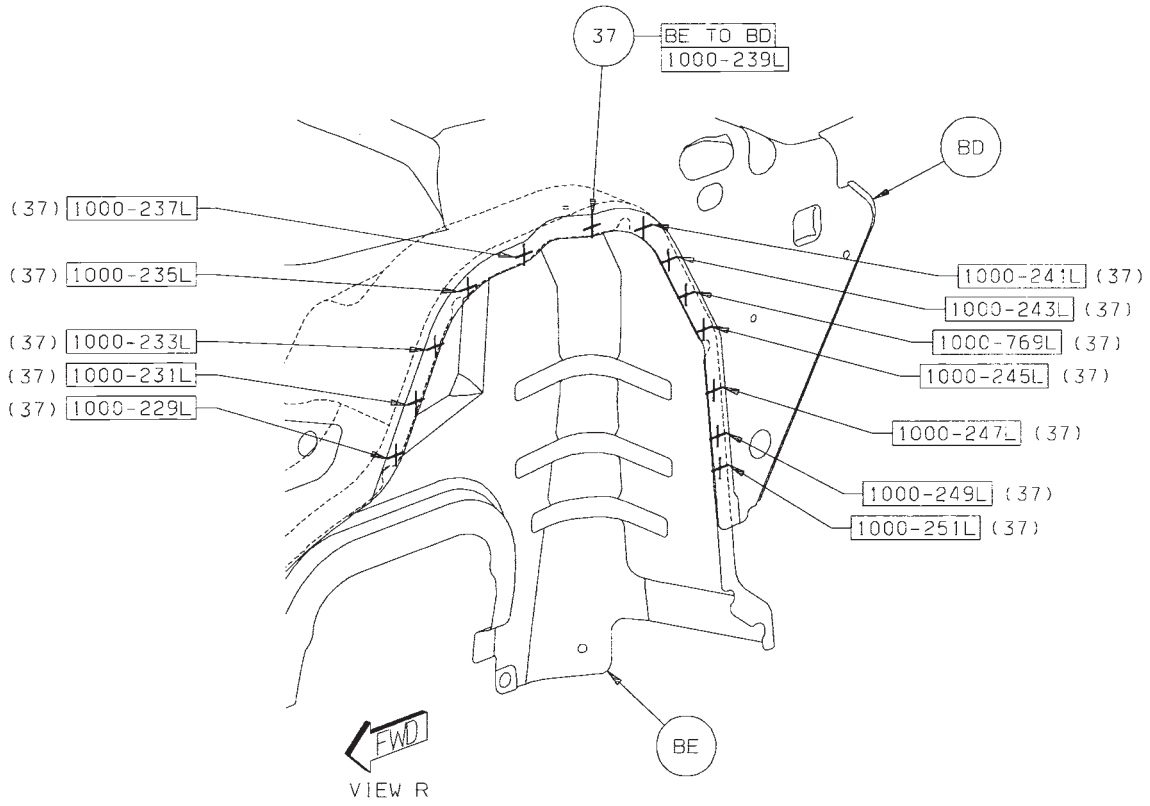

Back to Index

38 BF TO BG 4/SD S/WELDS (ORD)
39 BJ TO BF TO BG 3/SD S/WELDS (ORD)
40 BJ TO BG TO BH 4/SD S/WELDS (ORD)

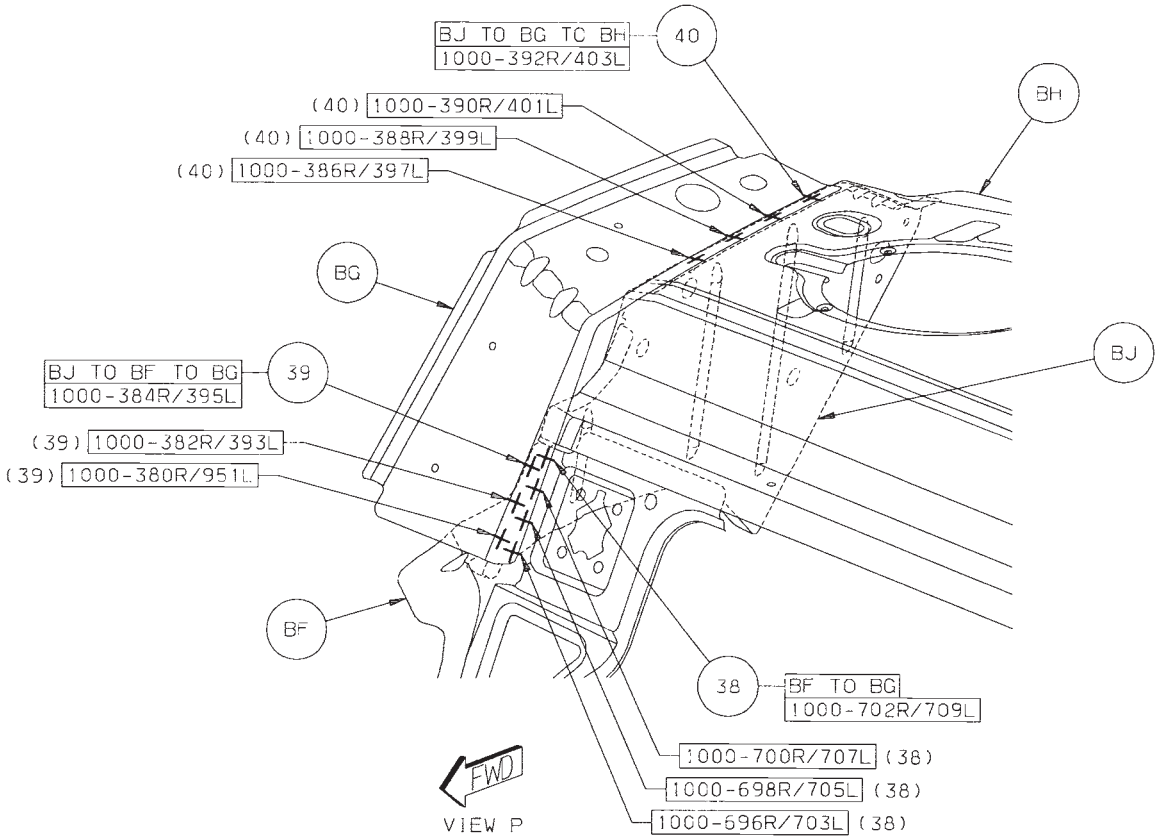

Back to Index

41 BC TO BR 6/SD S/WELDS (ORD)
42 BL TO BM 4/SD S/WELDS (ORD)
43 BK TO BM 3/SD S/WELDS (ORD)
44 BC TO BP 3/SD S/WELDS (ORD)
45 BN TO BC TO BP 1/SD S/WELD (ORD)
46 BN TO BC 7/SD S/WELDS (ORD)
47 BC TO AM 4/SD S/WELDS (ORD)

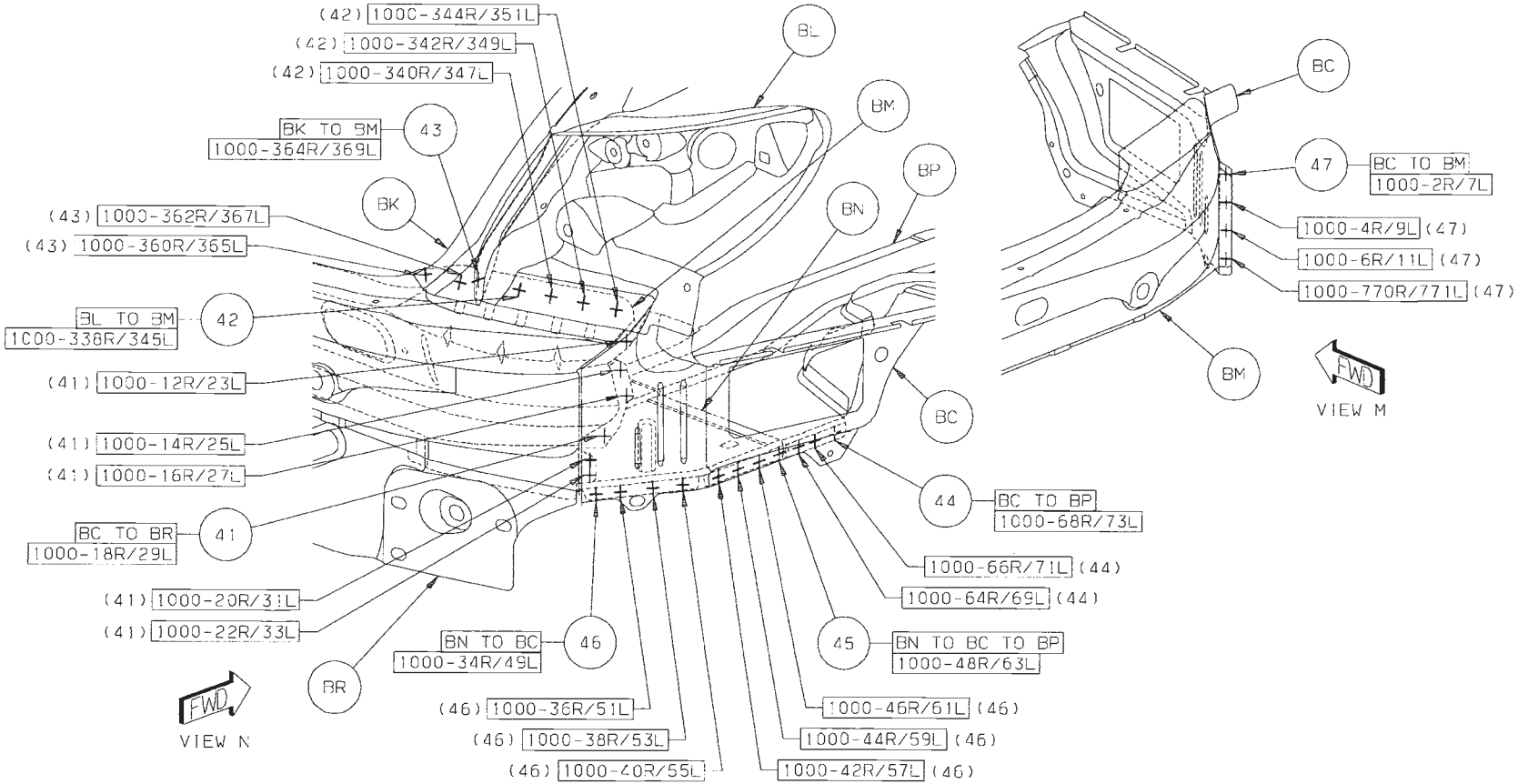

Back to Index

48 BS TO BH 30 S/WELDS (ORD)
49 BK TO BS TO BH 2/SD S/WELDS (ORD)
50 BK TO BH TO BD 1/SD S/WELD (ORD)
51 BK TO BH 3/SD S/WELDS (ORD)
52 BK TO BS 1/SD S/WELD (ORD)

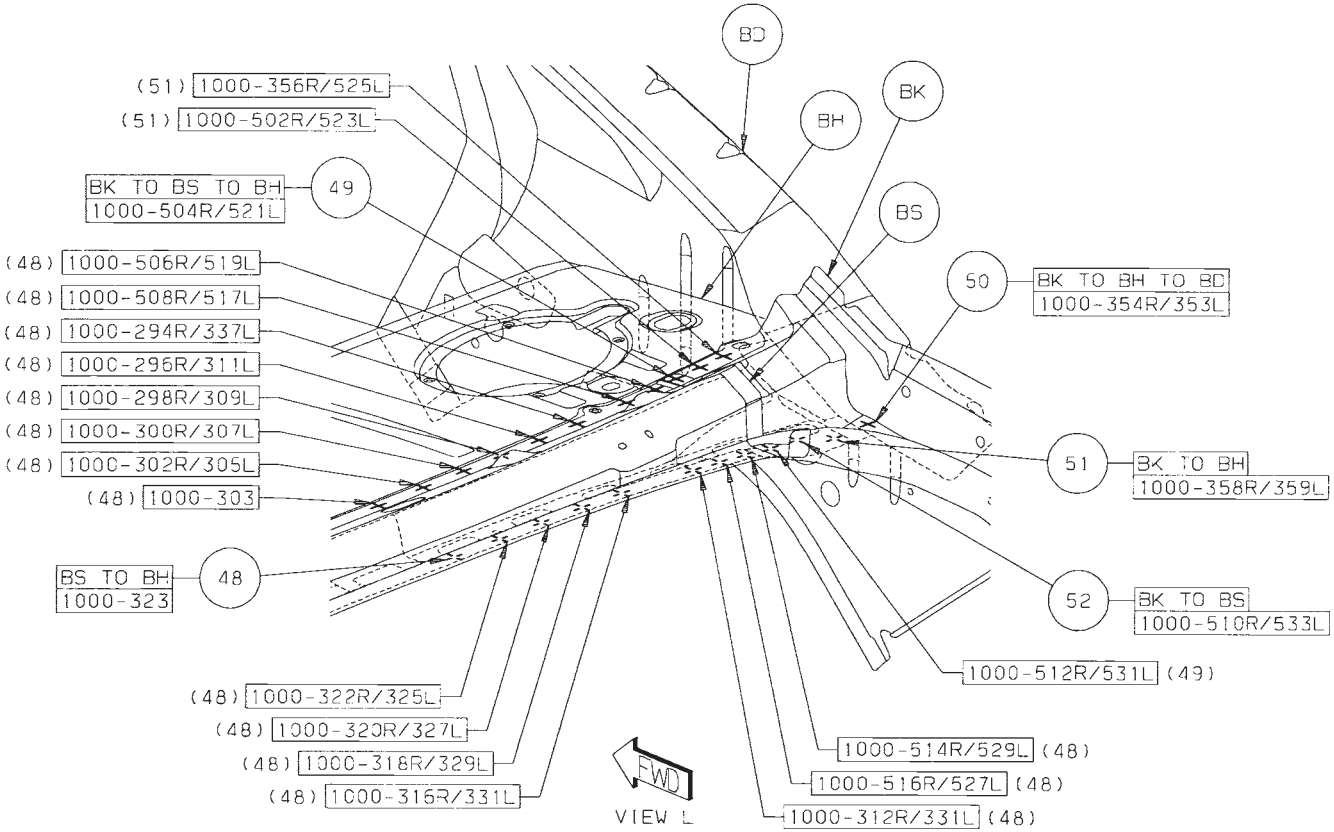

Back to Index

53 AH TO AE 1/SD STRUC ADH
54 AF TO AH 1/SD STRUC ADH

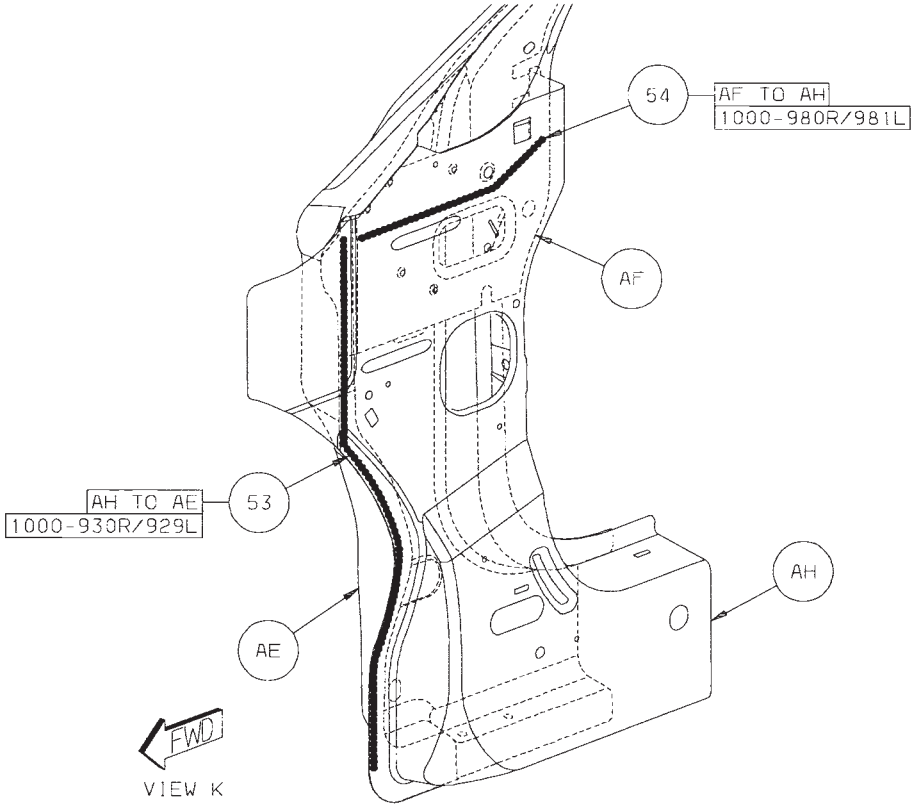

Back to Index

55 BT TO AX 1/SD GUM DROP
56 AW TO AL 1/SD STRUC ADH

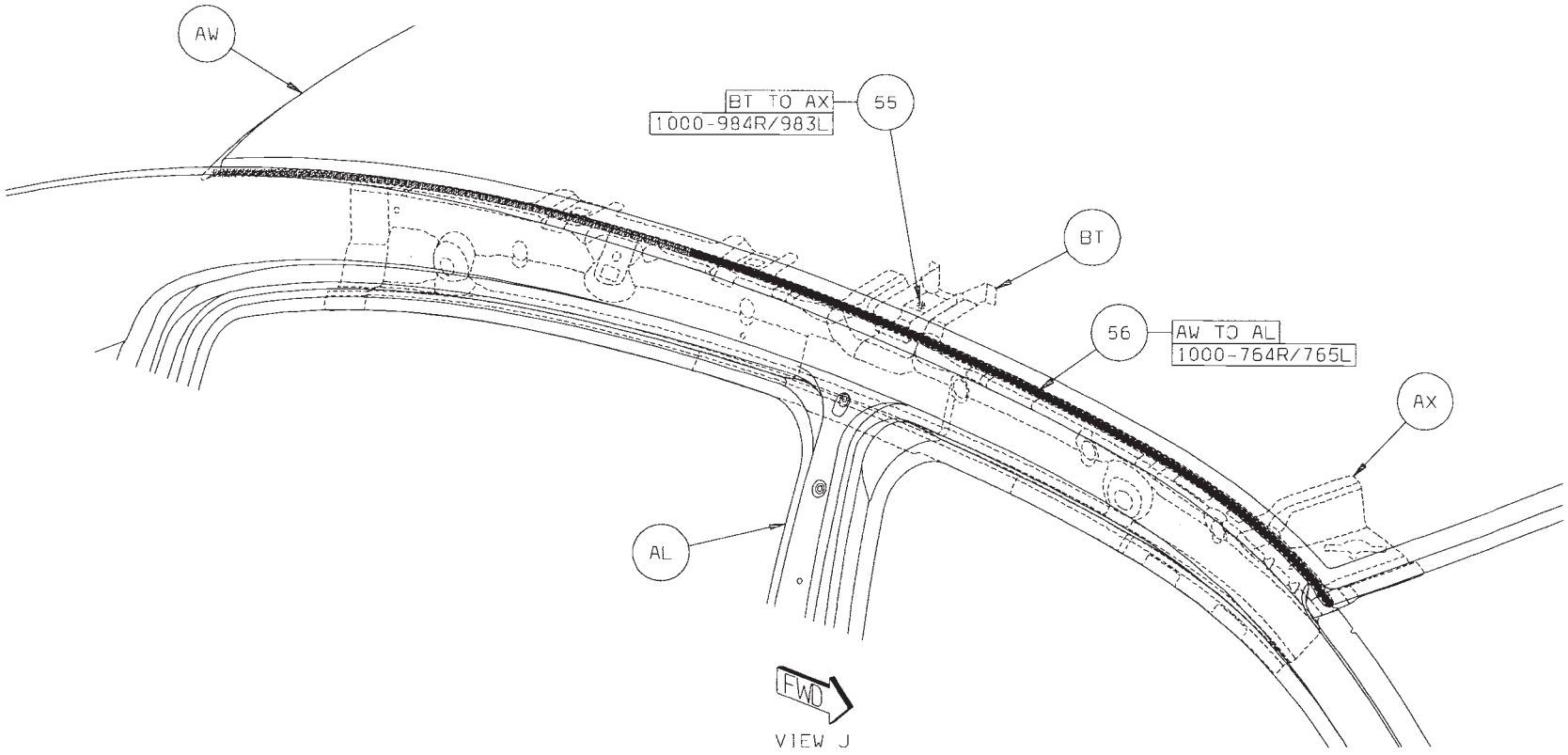

Back to Index

57 AN TO AM 1/SD STRUC ADH
58 BB TO AZ 1/SD STRUC ADH
59 BG TO BU 1/SD STRUC ADH

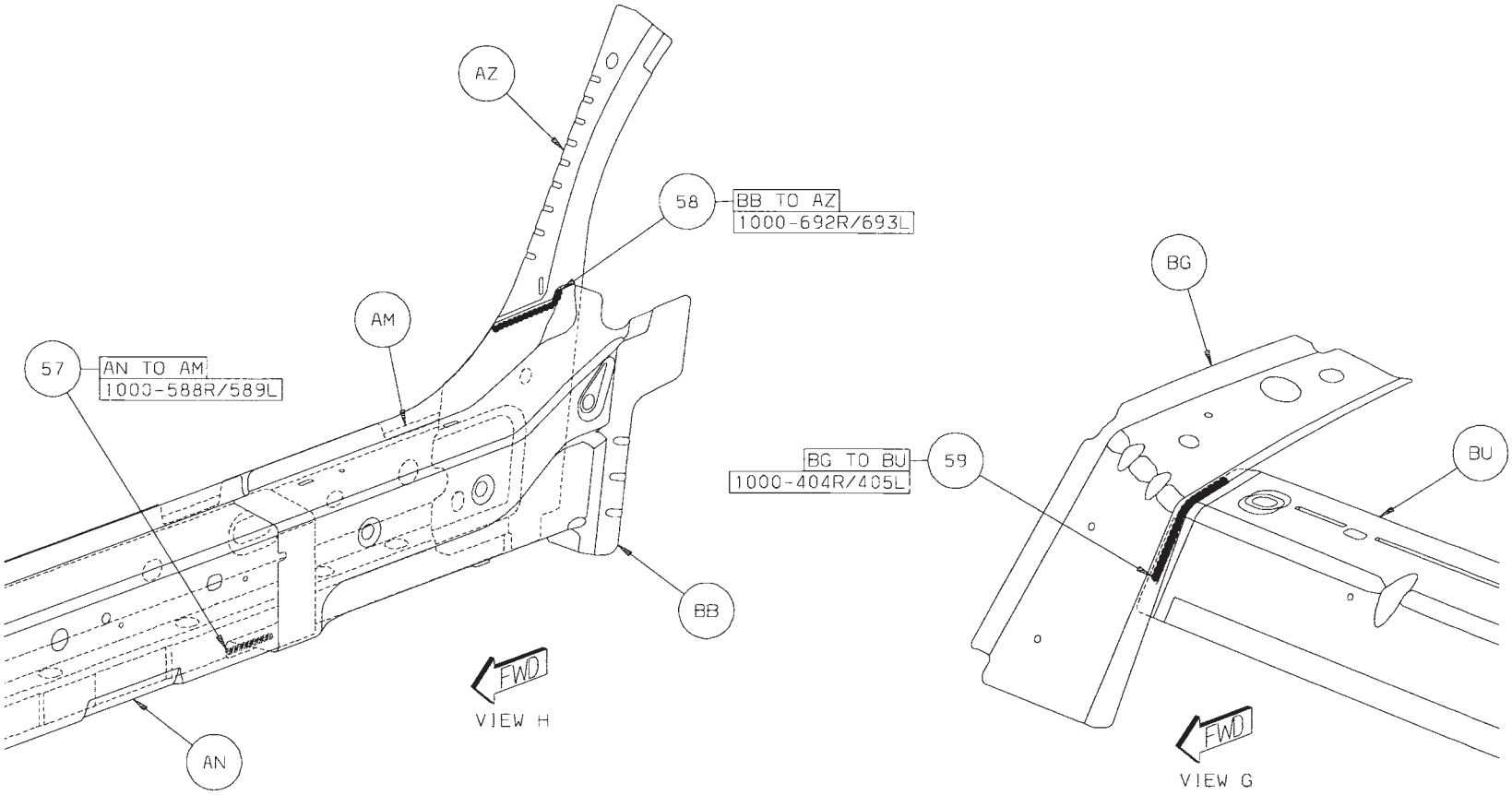

Back to Index

SEALER INFORMATION

SEALER AMOUNT/BEAD SIZE

4mm DIA* X 1000mm
PUMPABLE

* = DIAMETER

APPLICATION RECOMMENDATIONS

ALL REPAIRS WHERE PANELS WERE REPLACED HAVE VOIDS THAT MUST BE FILLED WITH SEALANT. SEALANT SHOULD BE APPLIED TO ALL SKIPS, PIN HOLES, IN SEALERS AND WELD BURN THROUGH HOLES ON THE INTERIOR AND EXTERIOR OF TH VEHICLE THAT WOULD PERMIT LEAKAGE OF WATER, AIR OR EXHAUST FUMES. TYPICAL AREAS OF THE EXTERIOR THAT MUST BE SEALED ARE LISTED IN THIS SECTION. AREAS OF THE INTERIOR THAT MUST BE SEALED ARE FLOOR PANS, WHEELHOUSES, DASH PANEL, AND COWL SIDES.

SEALER LEGEND

THUMBGRADE SEALER

PUMPABLE SEALER

HIDDEN SEALER

Back to Index

BODY SEALER LOCATIONS

DESCRIPTION	FIGURE
PANEL COWL TOP/COWL SIDES	1
COWL TOP UPPER PANEL	2
WINDSHIELD HEADER/A-PILLAR	3
INNER COWL TOP/DASH PANEL	4
STEERING BRACKET SHAFT/DASH PANEL	5
DASH PANEL/FRONT FLOOR PAN	6
DASH PANEL/COWL SIDE	7
FLOOR PAN/REAR CROSSMEMBER	8
INNER SILL (1 OF 2)	9
INNER SILL (2 OF 2)	10
REAR FLOOR PAN/INNER WHEELHOUSE	11
REAR FLOOR PAN/WHEELHOUSE/SILL	12
REAR FLOOR PAN/QUARTER PANEL/WHEELHOUSE	13
REAR CLOSEOUT PANEL/QUARTER EXTENSION	14
INNER REAR QUARTER/WHEELHOUSE (1 OF 4)	15
INNER REAR QUARTER/WHEELHOUSE (2 OF 4)	16
INNER REAR QUARTER/WHEELHOUSE (3 OF 4)	17
INNER REAR QUARTER/WHEELHOUSE (4 OF 4)	18
INNER REAR QUARTER/WHEELHOUSE	19
OUTER REAR QUARTER/REAR QUARTER REINFORCEMENT	20
REAR TAIL LAMP CAN/REAR REINFORCEMENT	21
REAR QUARTER PANEL OUTER/OUTER SILL	22
OUTER REAR QUARTER/QUARTER UPPER REINFORCEMENT AND LAMP	23

Preferred Mopar Product:

- Paintable Seam Sealer – Part No. 04318026

Back to Index

BODY SEALER LOCATIONS

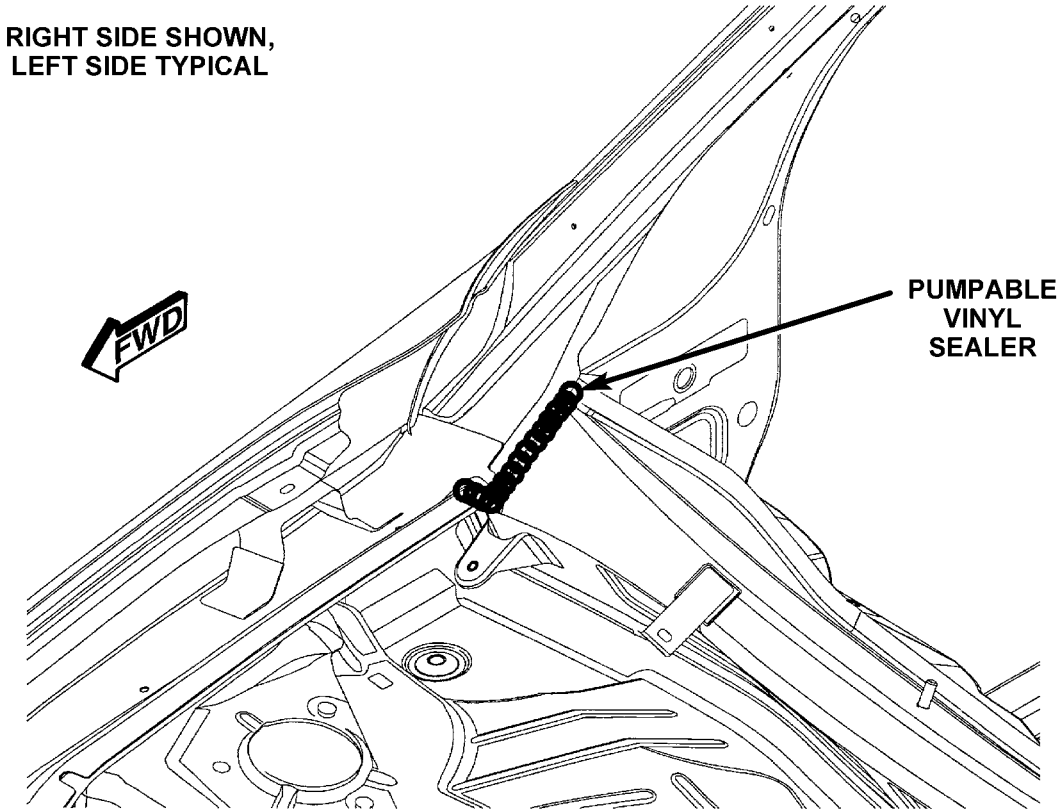

81a9a1b8

Figure 1. PANEL COWL TOP/PANEL SIDES

Back to Index

BODY SEALER LOCATIONS

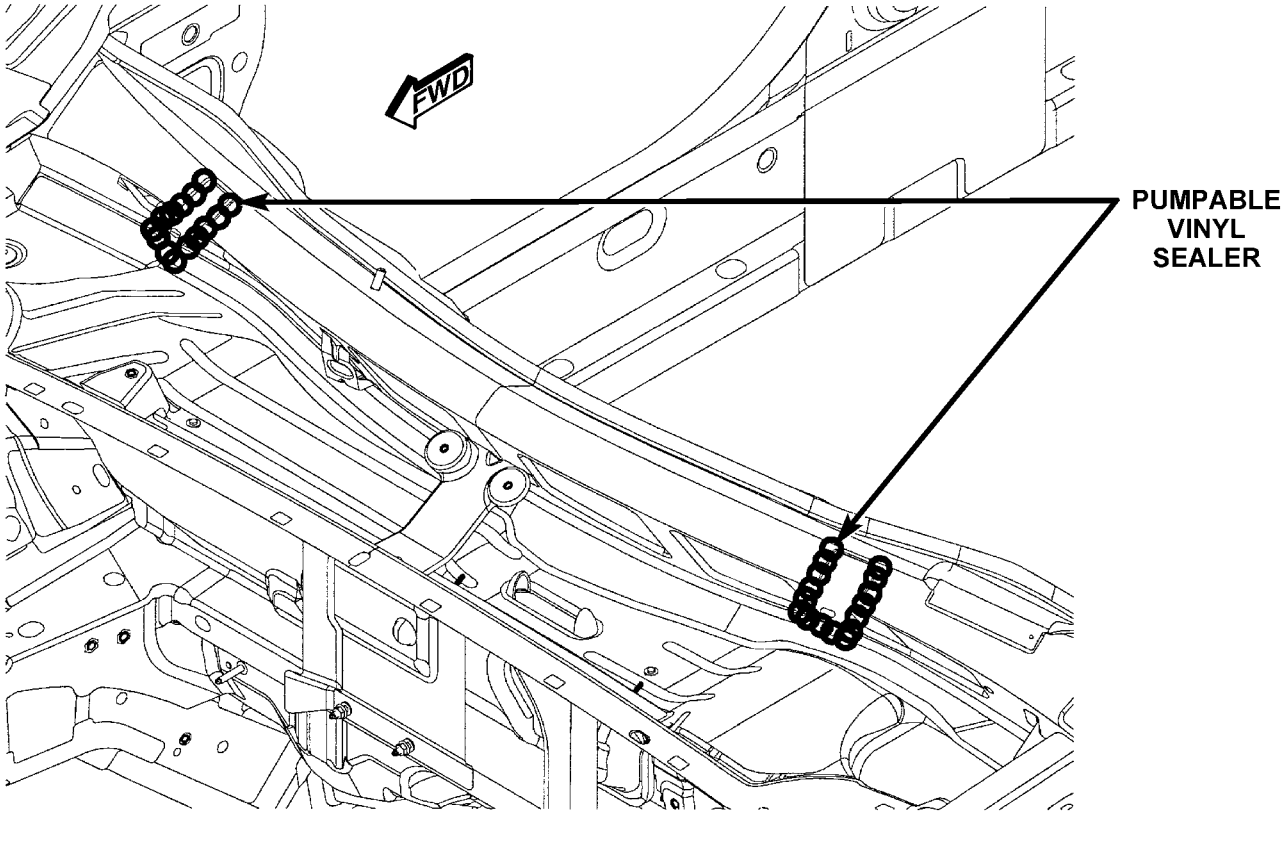

Figure 2. COWL TOP UPPER PANEL

Back to Index

BODY SEALER LOCATIONS

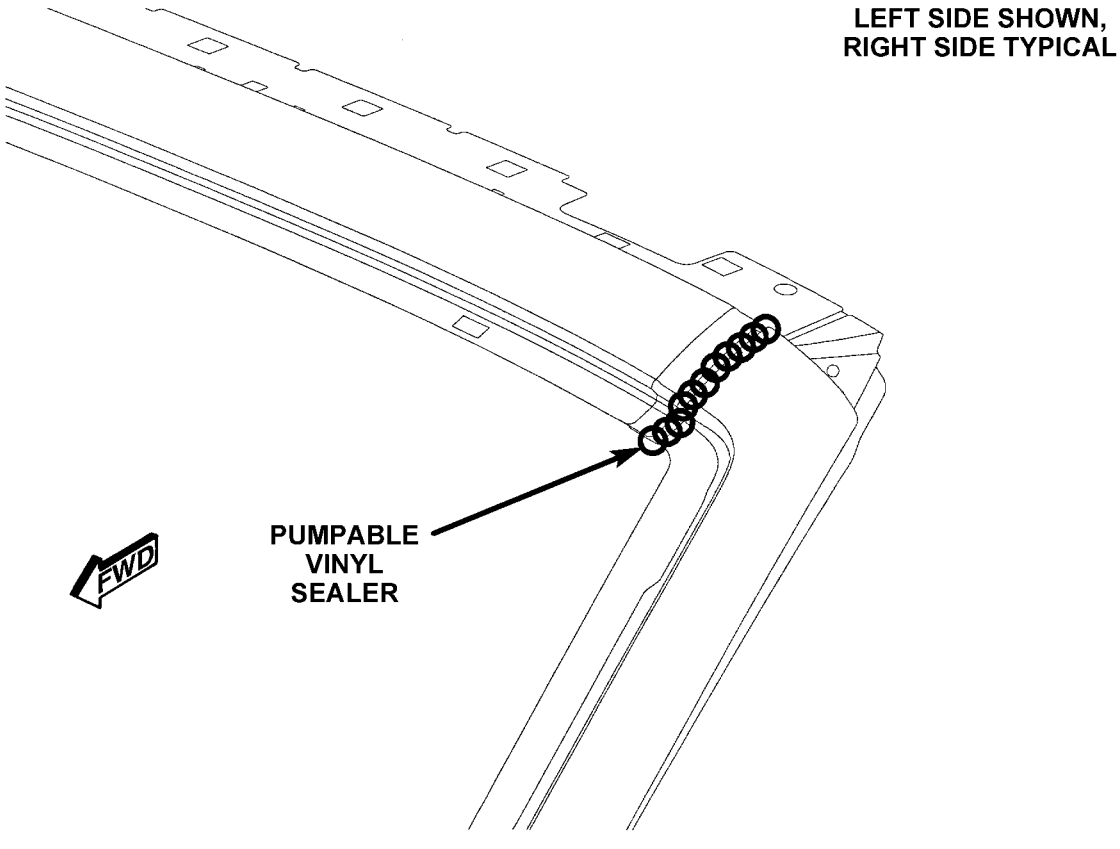

Figure 3. WINDSHIELD HEADER/A-PILLAR

Back to Index

BODY SEALER LOCATIONS

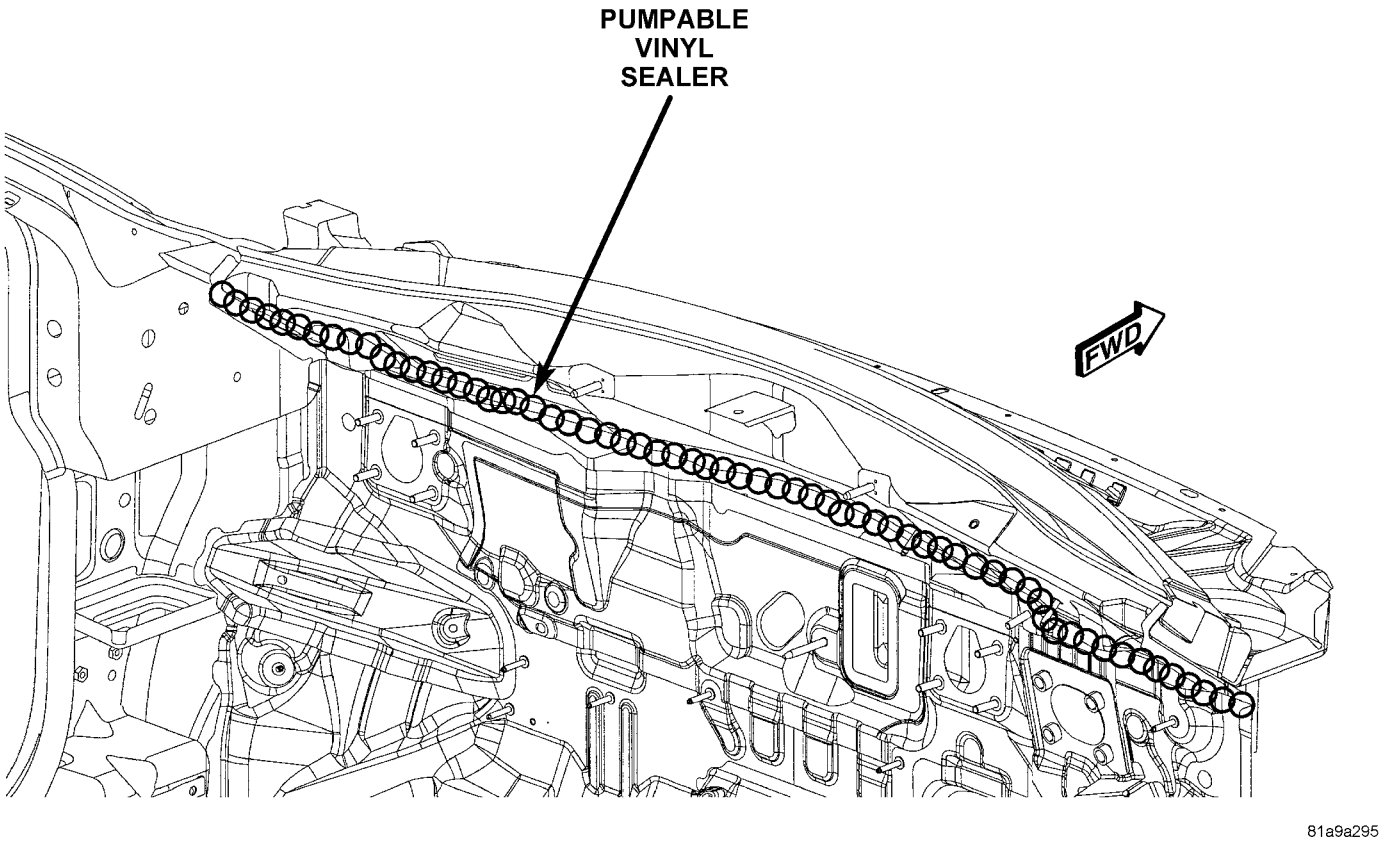

Figure 4. INNER COWL TOP/DASH PANEL

Back to Index

BODY SEALER LOCATIONS

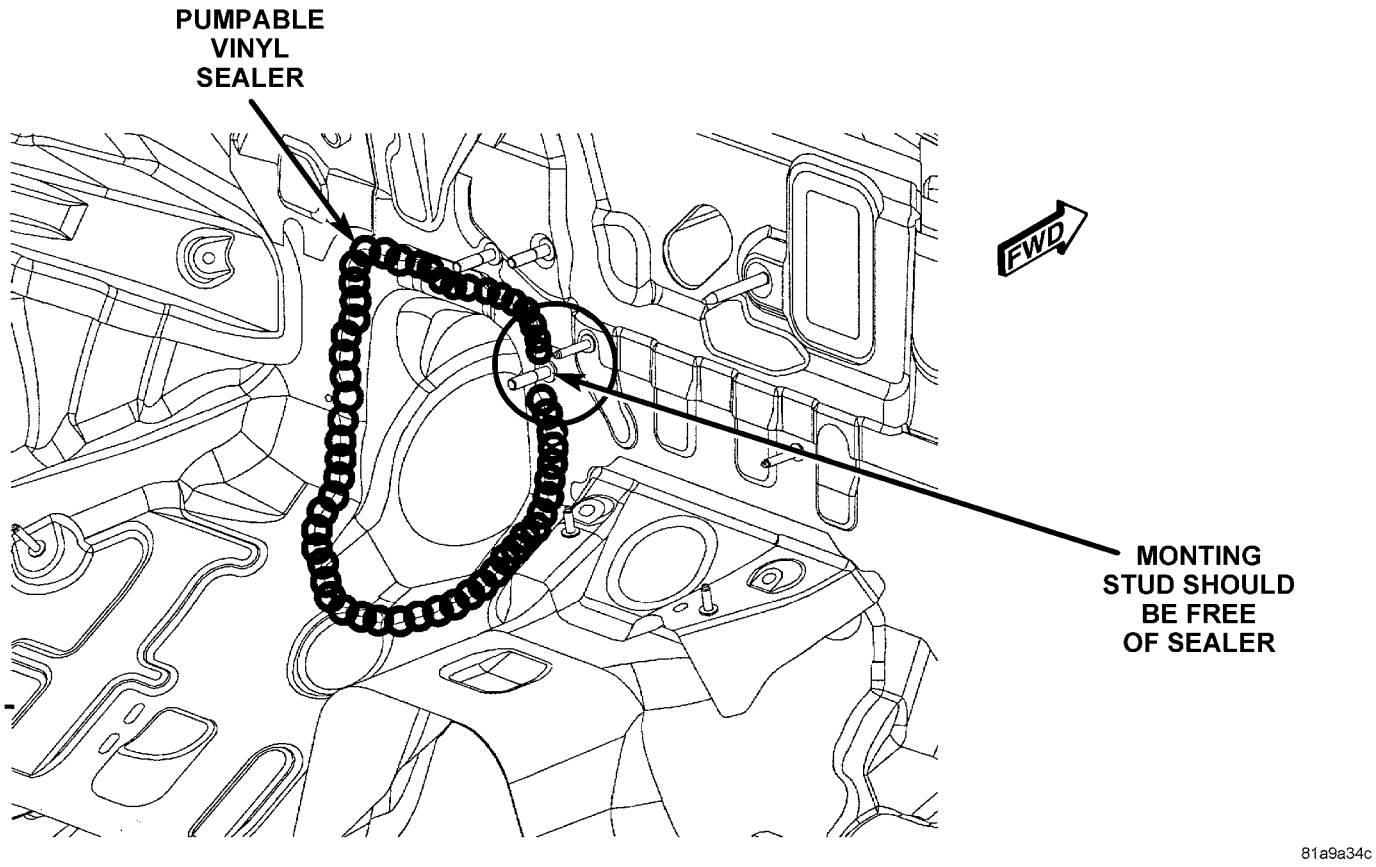

Figure 5. STEERING BRACKET SHAFT/DASH PANEL

Back to Index

BODY SEALER LOCATIONS

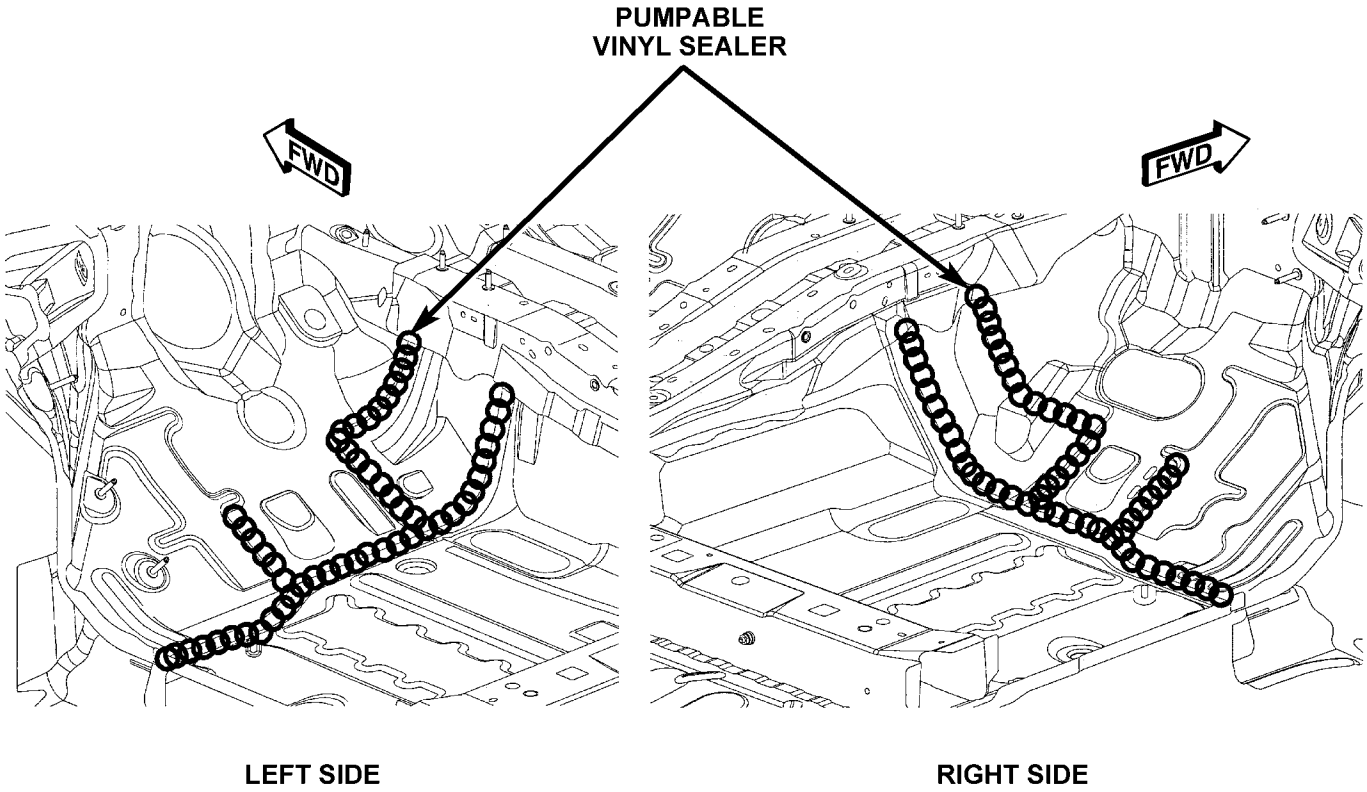

Figure 6. DASH PANEL/FRONT FLOOR PAN

Back to Index

BODY SEALER LOCATIONS

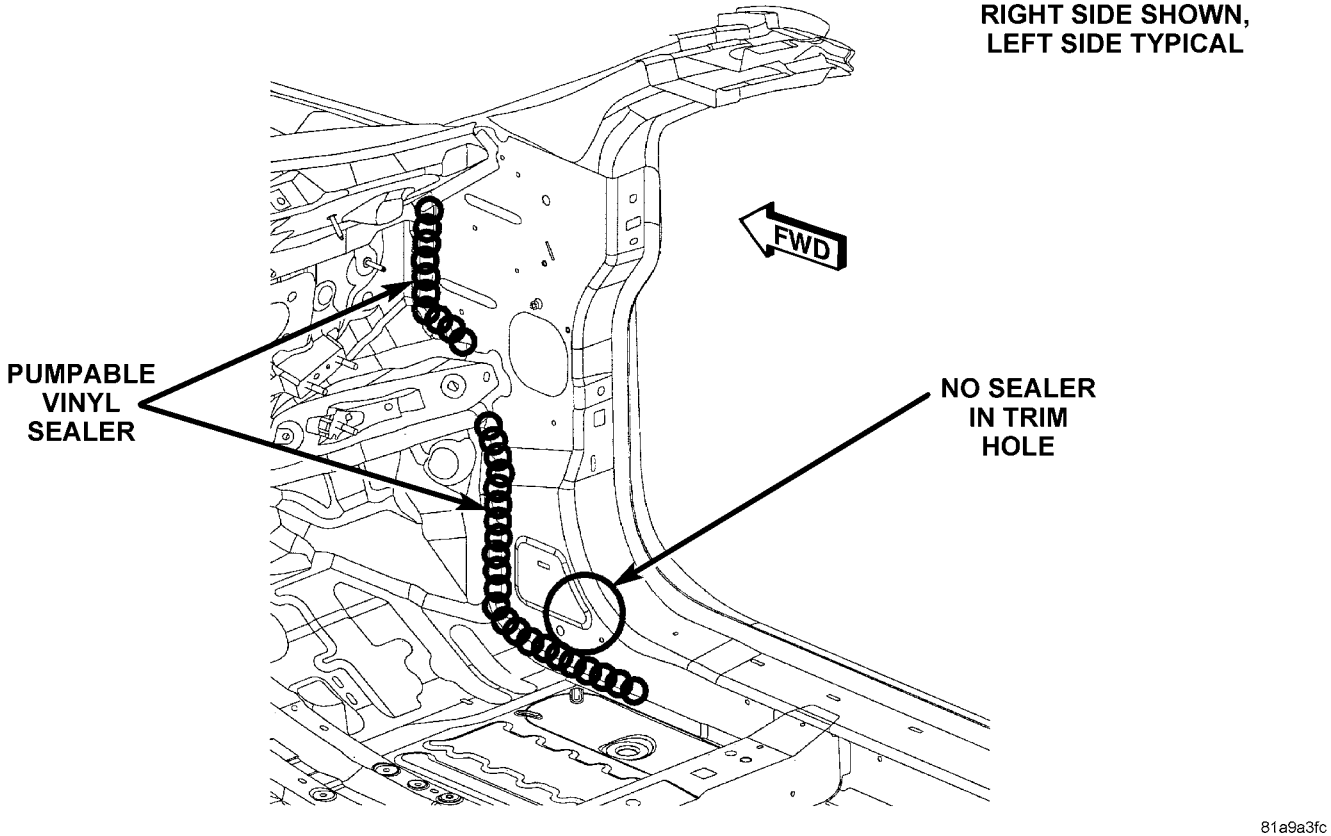

Figure 7. DASH PANEL/COWL SIDE

Back to Index

BODY SEALER LOCATIONS

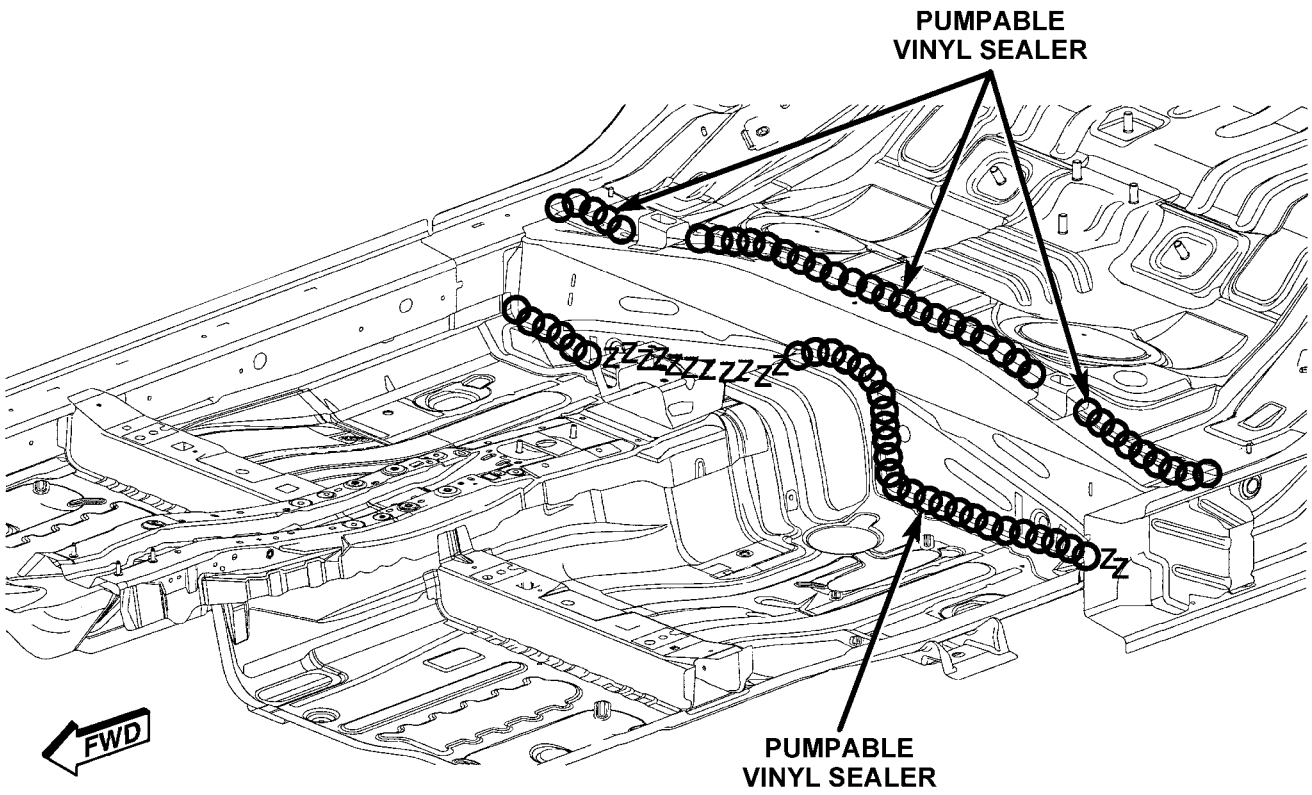

81a9a4ee

Figure 8. FLOOR PAN/REAR CROSSMEMBER

Back to Index

BODY SEALER LOCATIONS

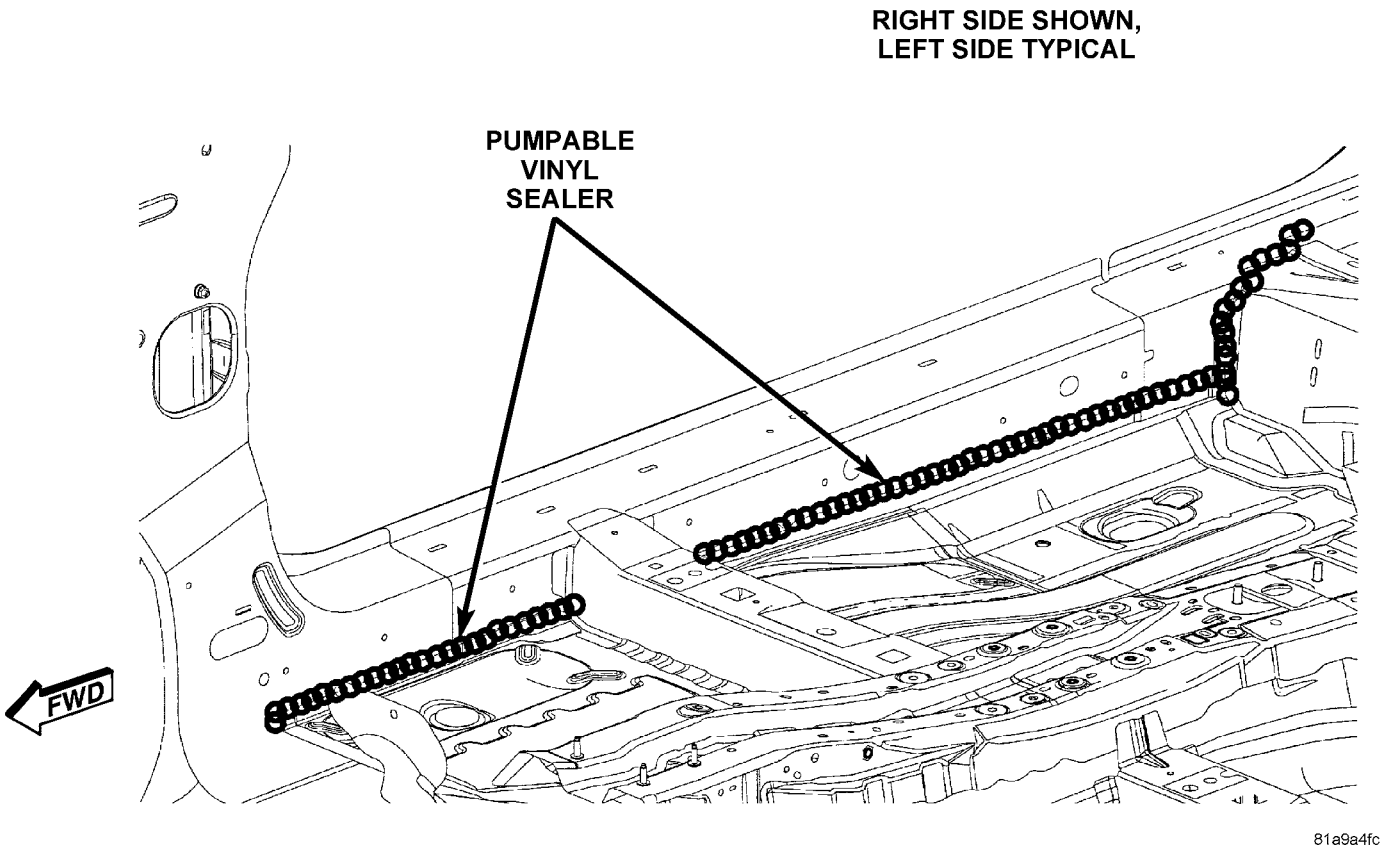

Figure 9. INNER SILL (1 OF 2)

Back to Index

BODY SEALER LOCATIONS

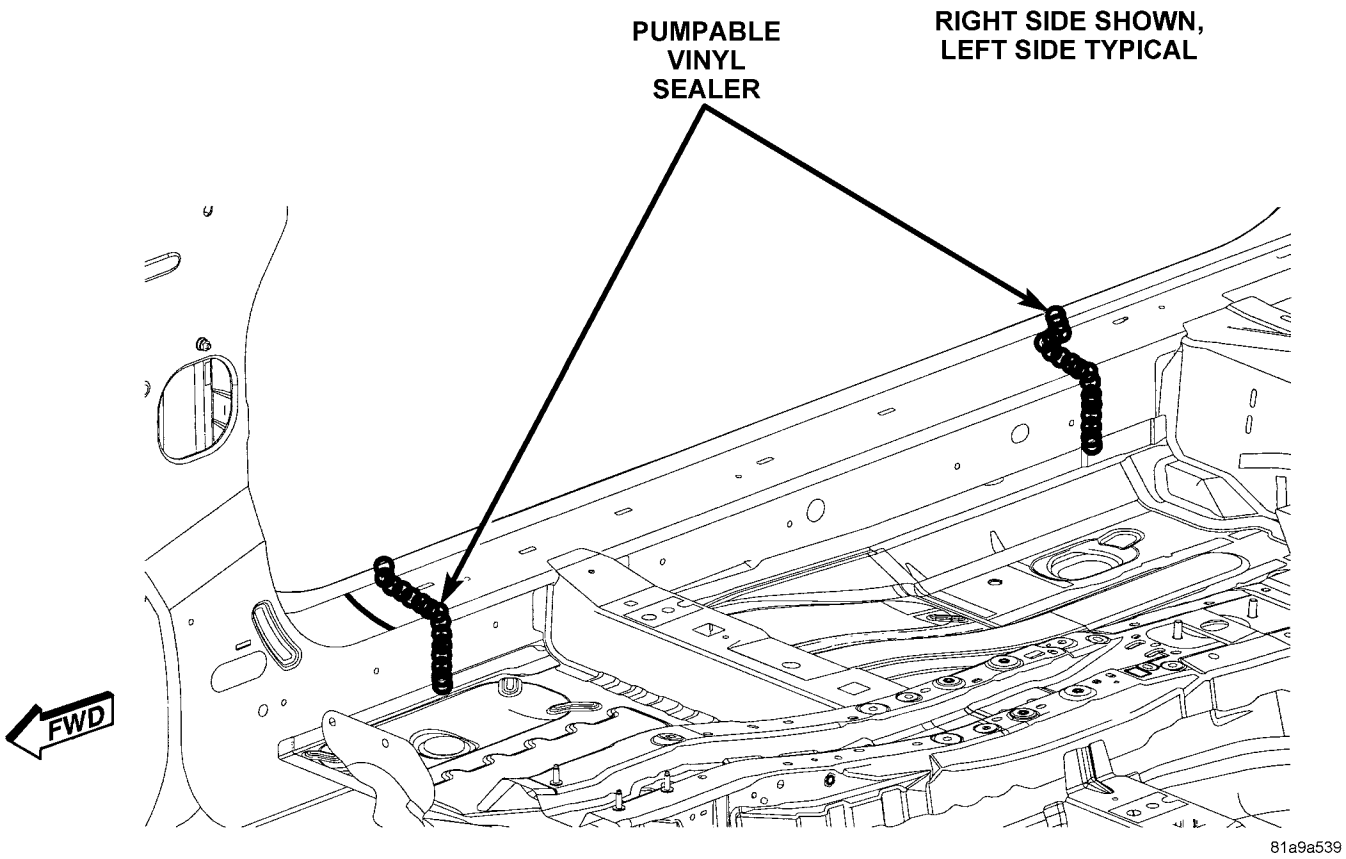

Figure 10. INNER SILL (2 OF 2)

Back to Index

BODY SEALER LOCATIONS

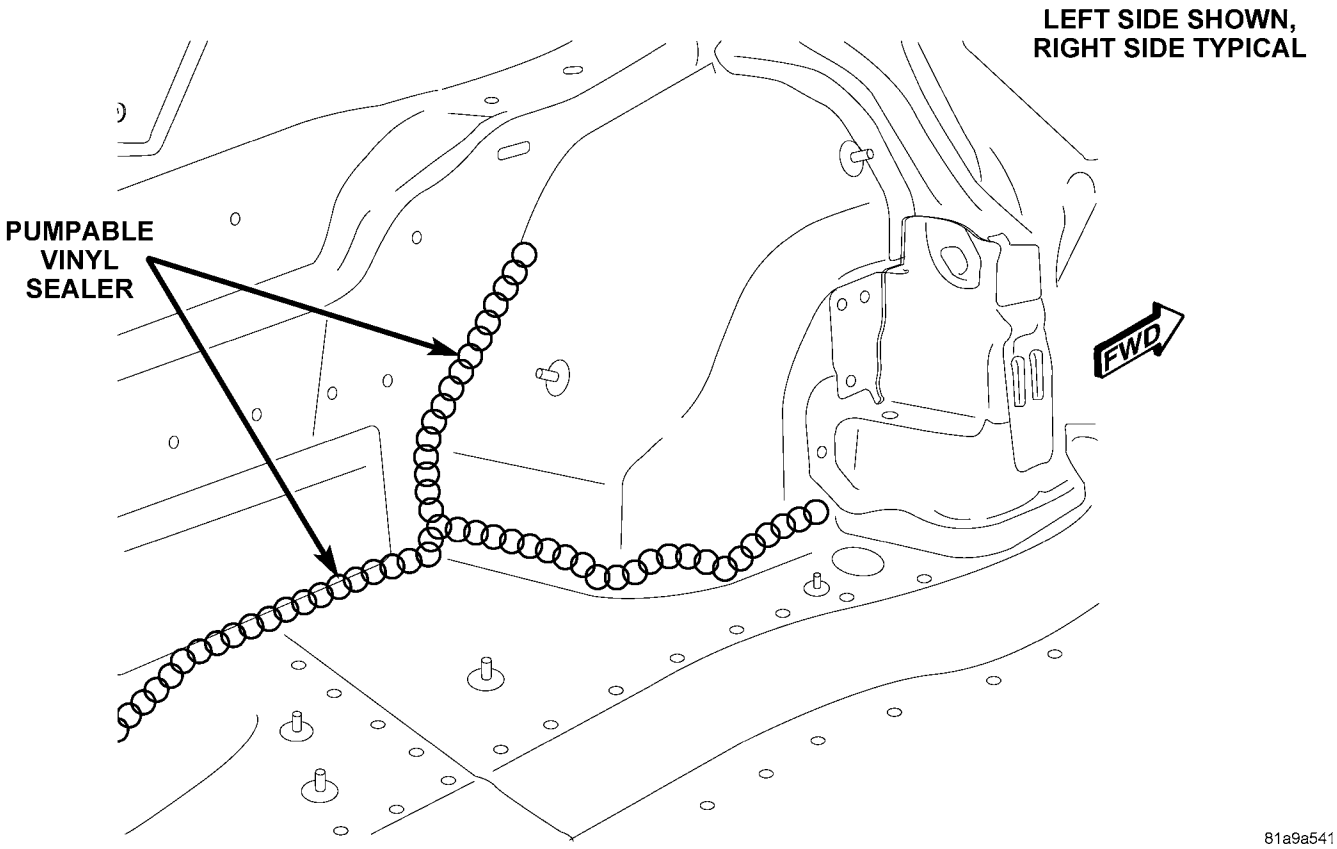

Figure 11. REAR FLOOR/INNER WHEELHOUSE

Back to Index

BODY SEALER LOCATIONS

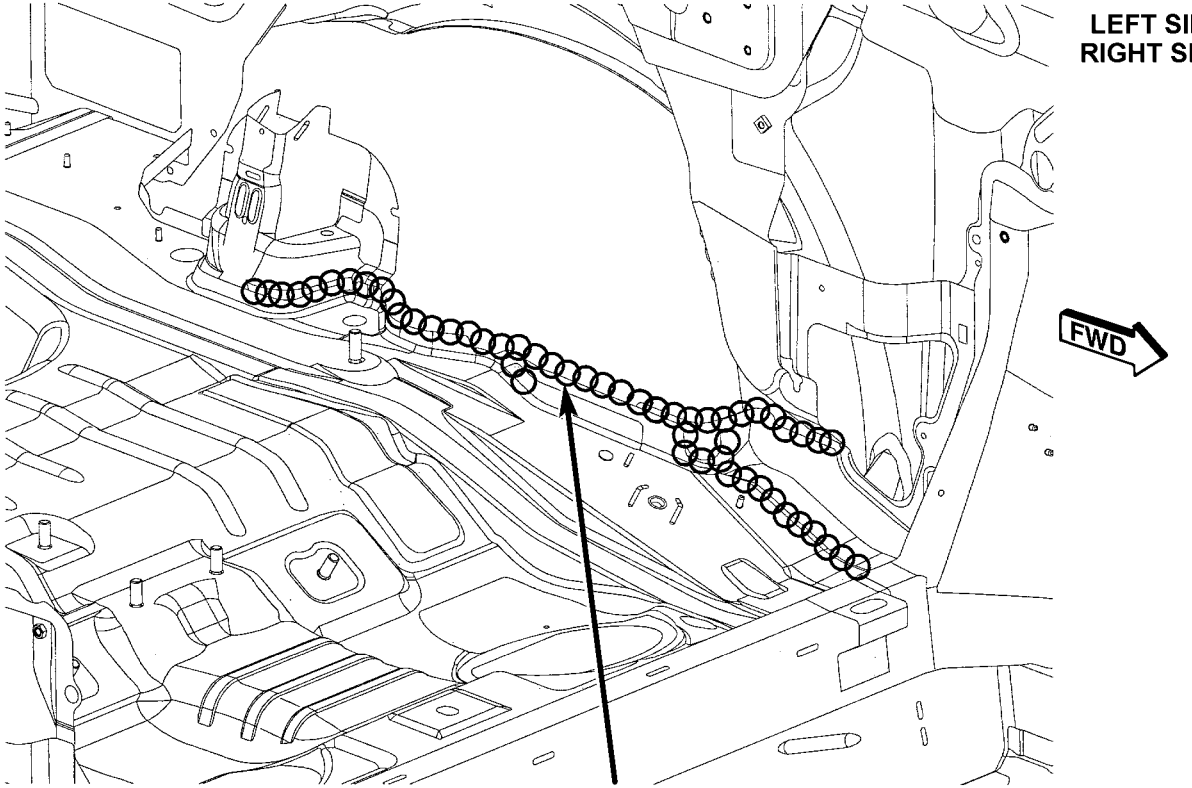

Figure 12. REAR FLOOR PAN/WHEELHOUSE/SILL

Back to Index

BODY SEALER LOCATIONS

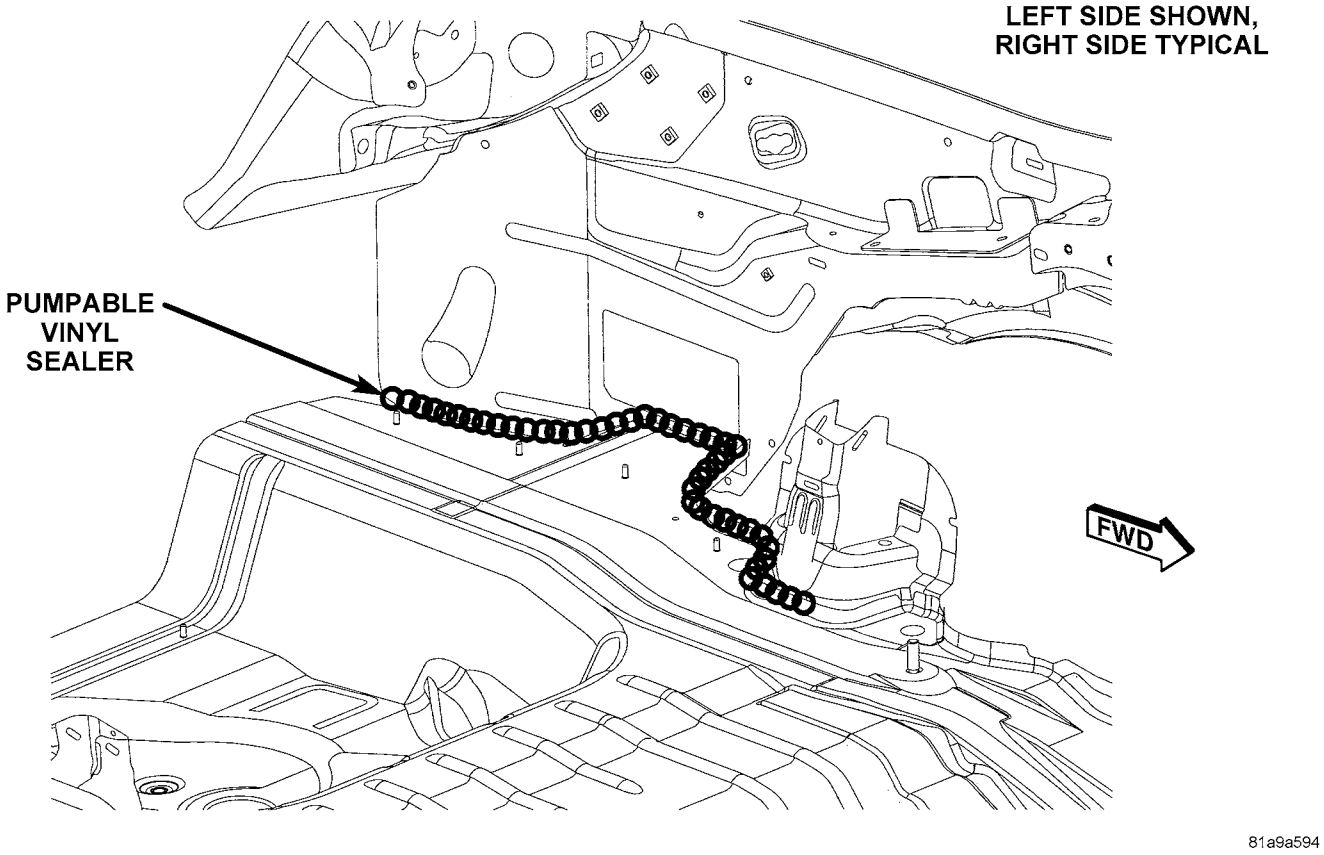

Figure 13. REAR FLOOR PAN/QUARTER PANEL/WHEELHOUSE

Back to Index

BODY SEALER LOCATIONS

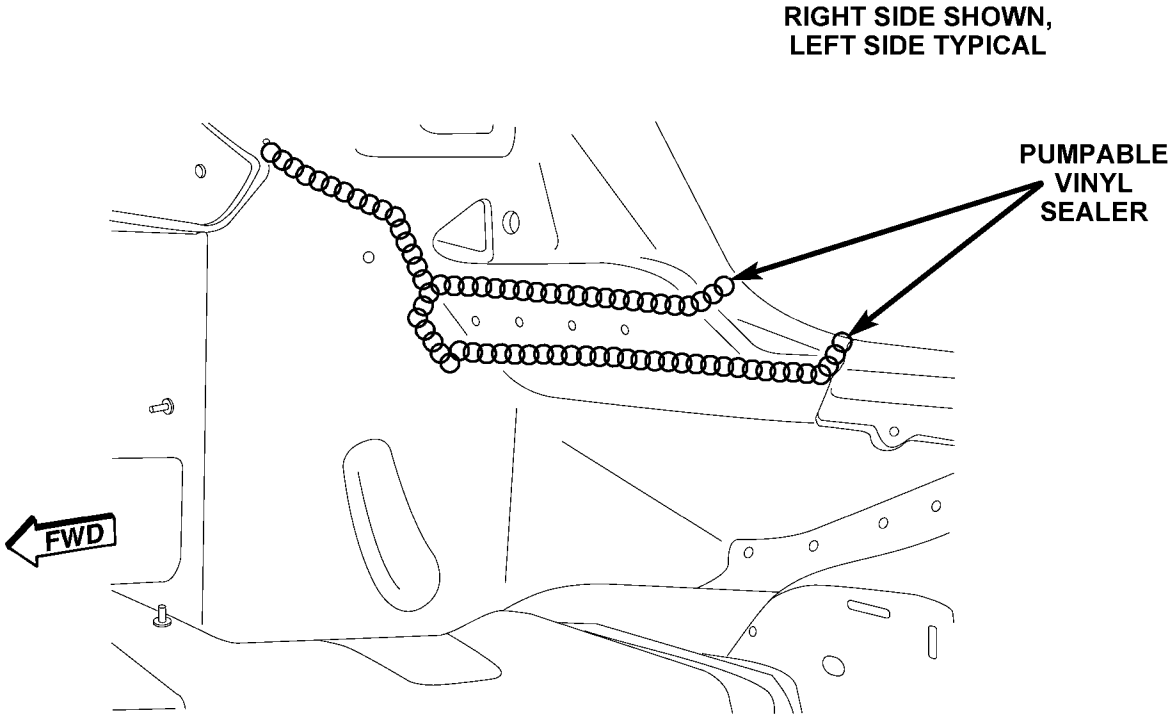

81a9af3b

Figure 14. REAR CLOSEOUT PANEL/QUARTER EXTENSION

Back to Index

BODY SEALER LOCATIONS

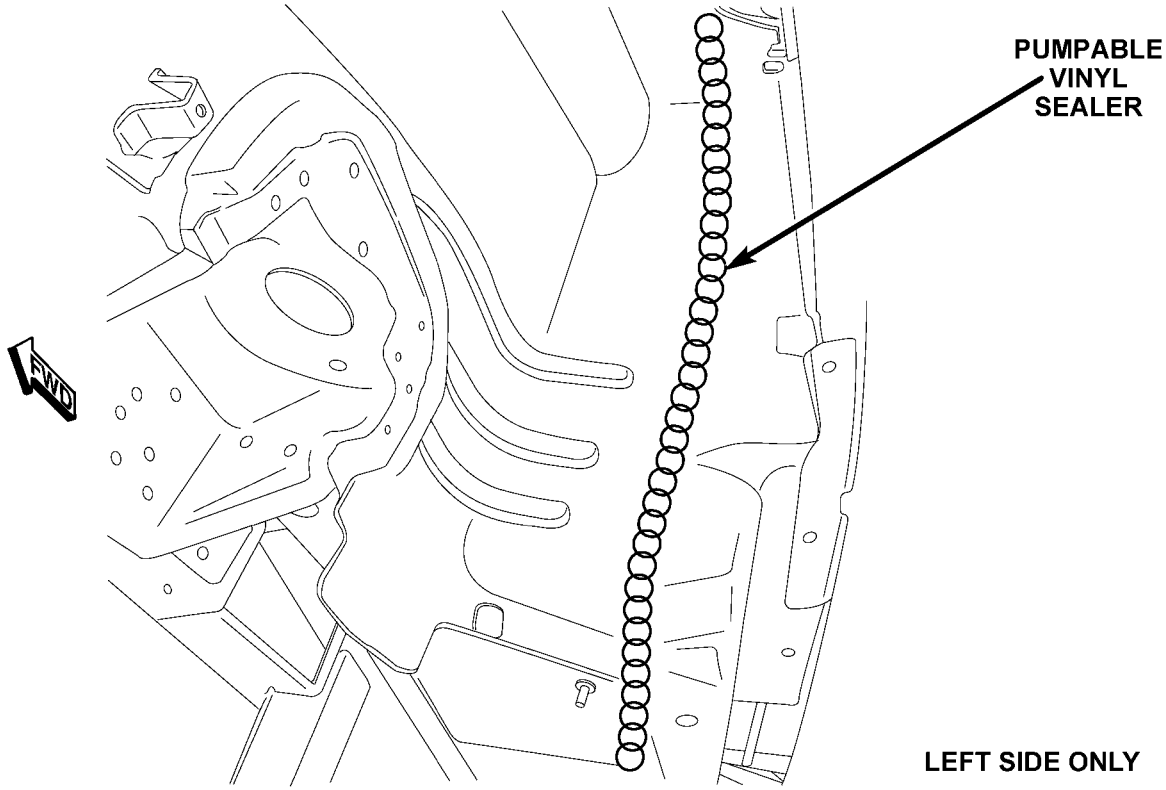

Figure 15. INNER REAR QUARTER/WHEELHOUSE (1 OF 4)

Back to Index

BODY SEALER LOCATIONS

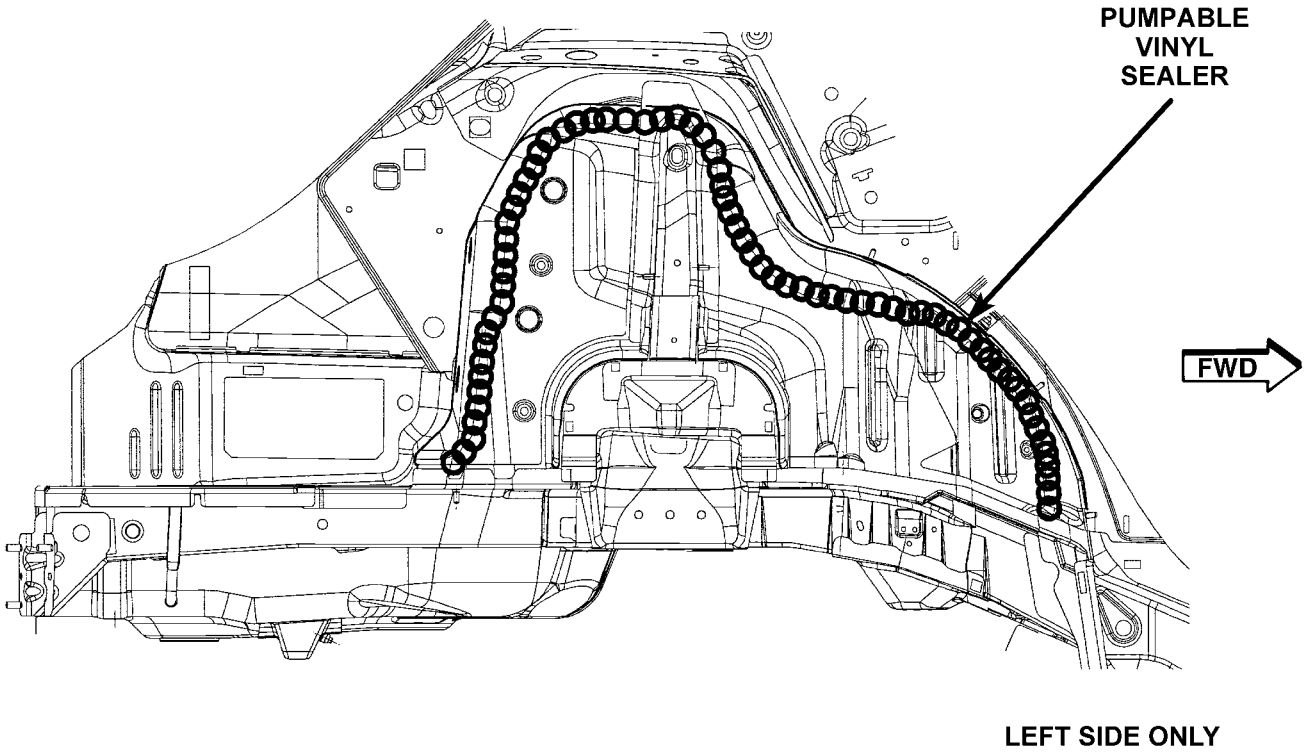

Figure 16. INNER REAR QUARTER/WHEELHOUSE (2 OF 4)

Back to Index

BODY SEALER LOCATIONS

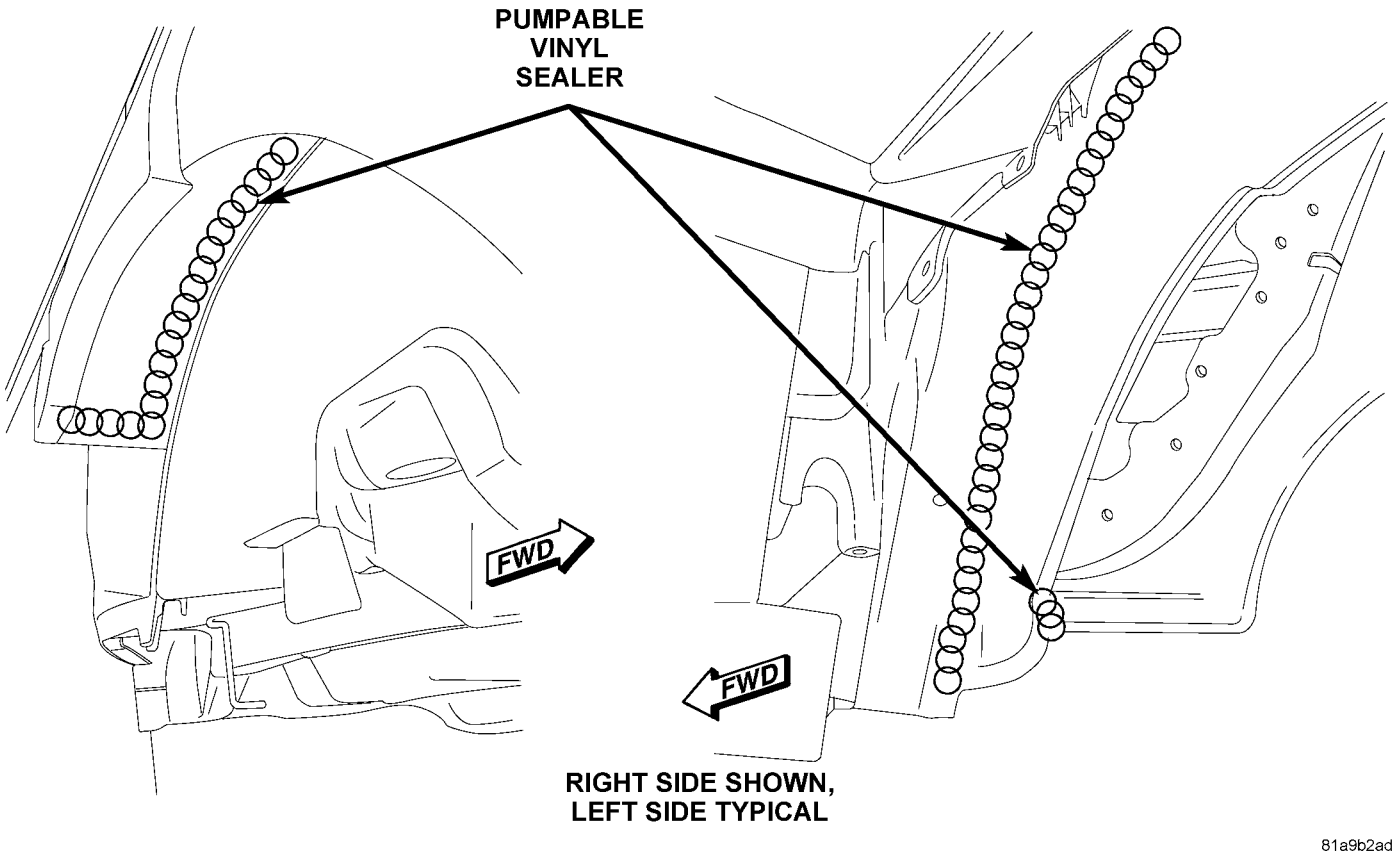

Figure 17. INNER REAR QUARTER/WHEELHOUSE (3 OF 4)

Back to Index

BODY SEALER LOCATIONS

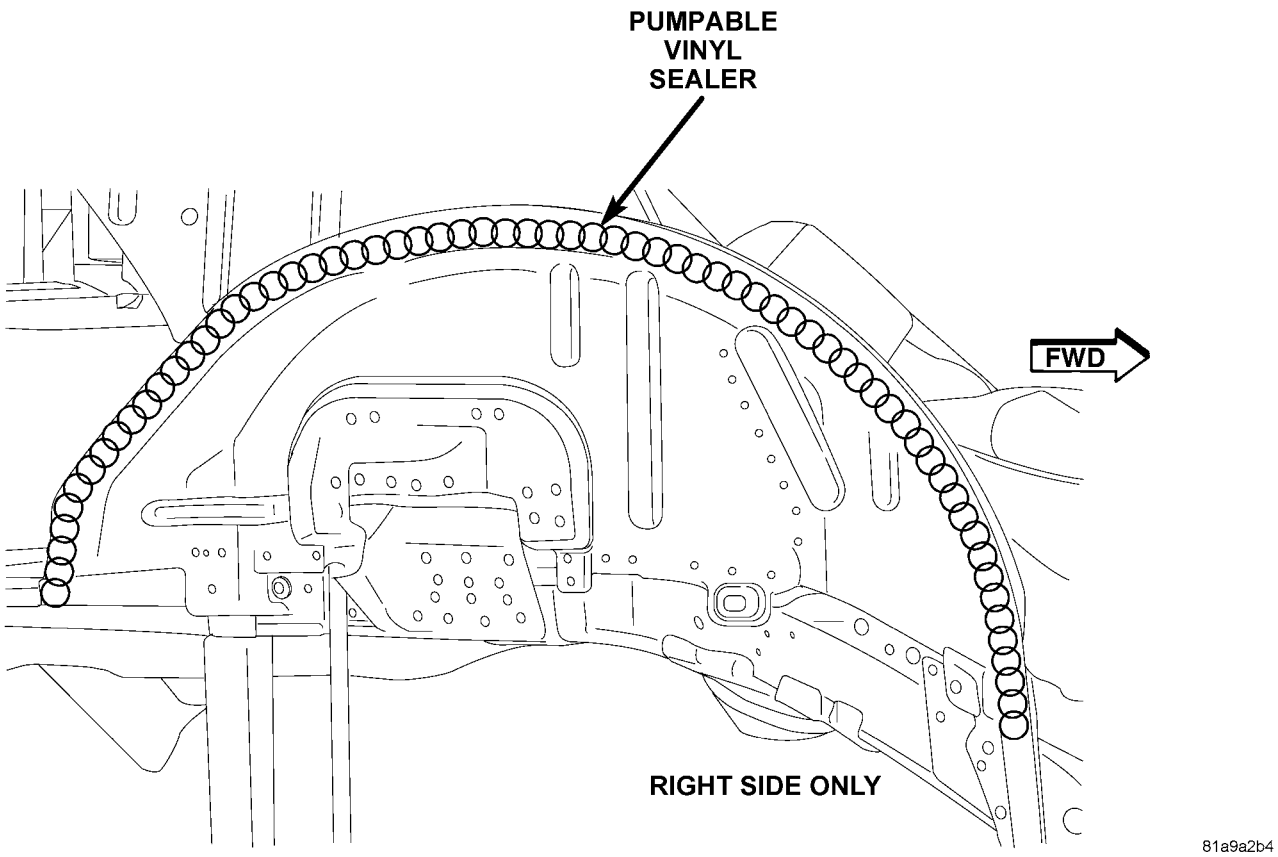

Figure 18. INNER QUARTER/WHEELHOUSE (4 OF 4)

Back to Index

BODY SEALER LOCATIONS

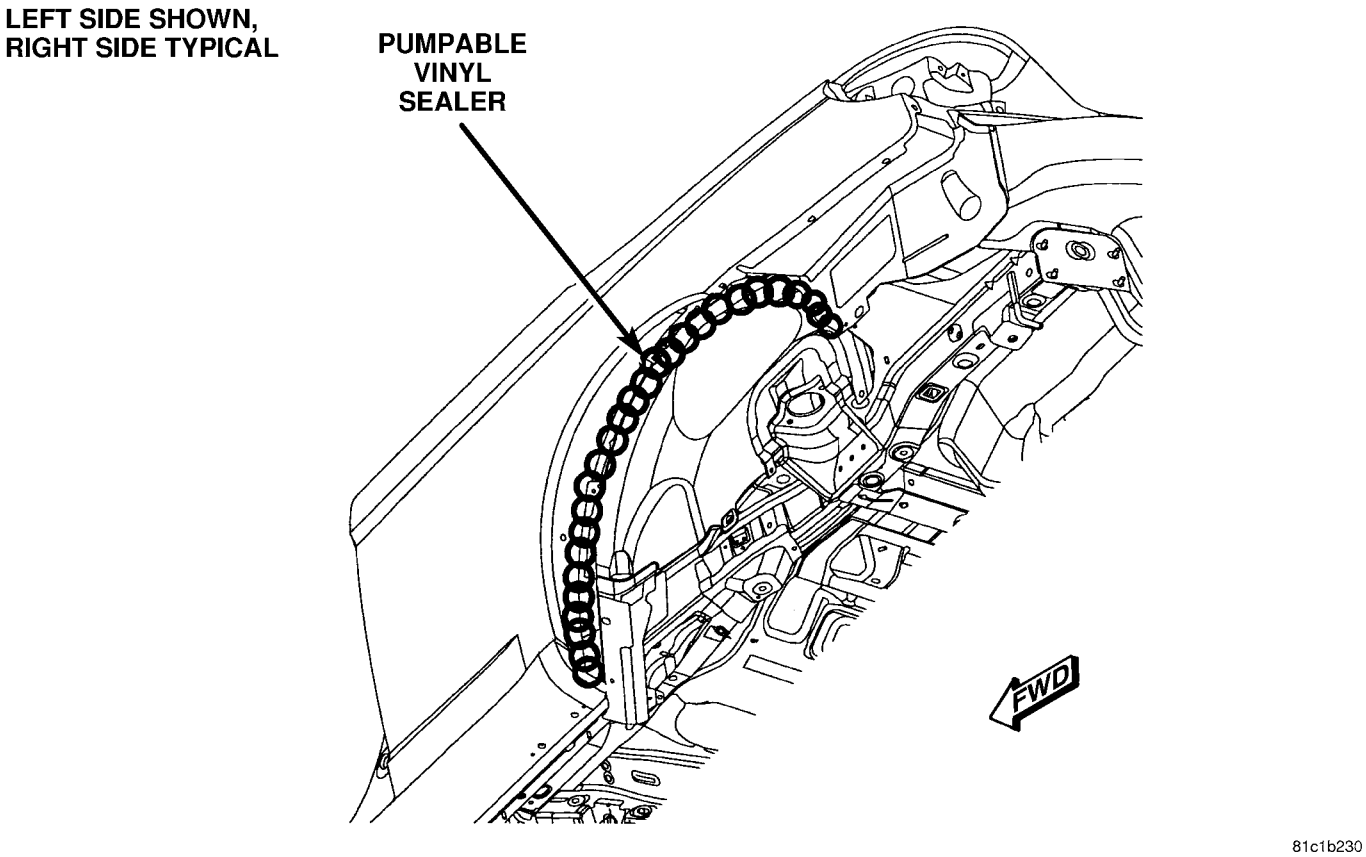

Figure 19. INNER REAR QUARTER/WHEELHOUSE

Back to Index

BODY SEALER LOCATIONS

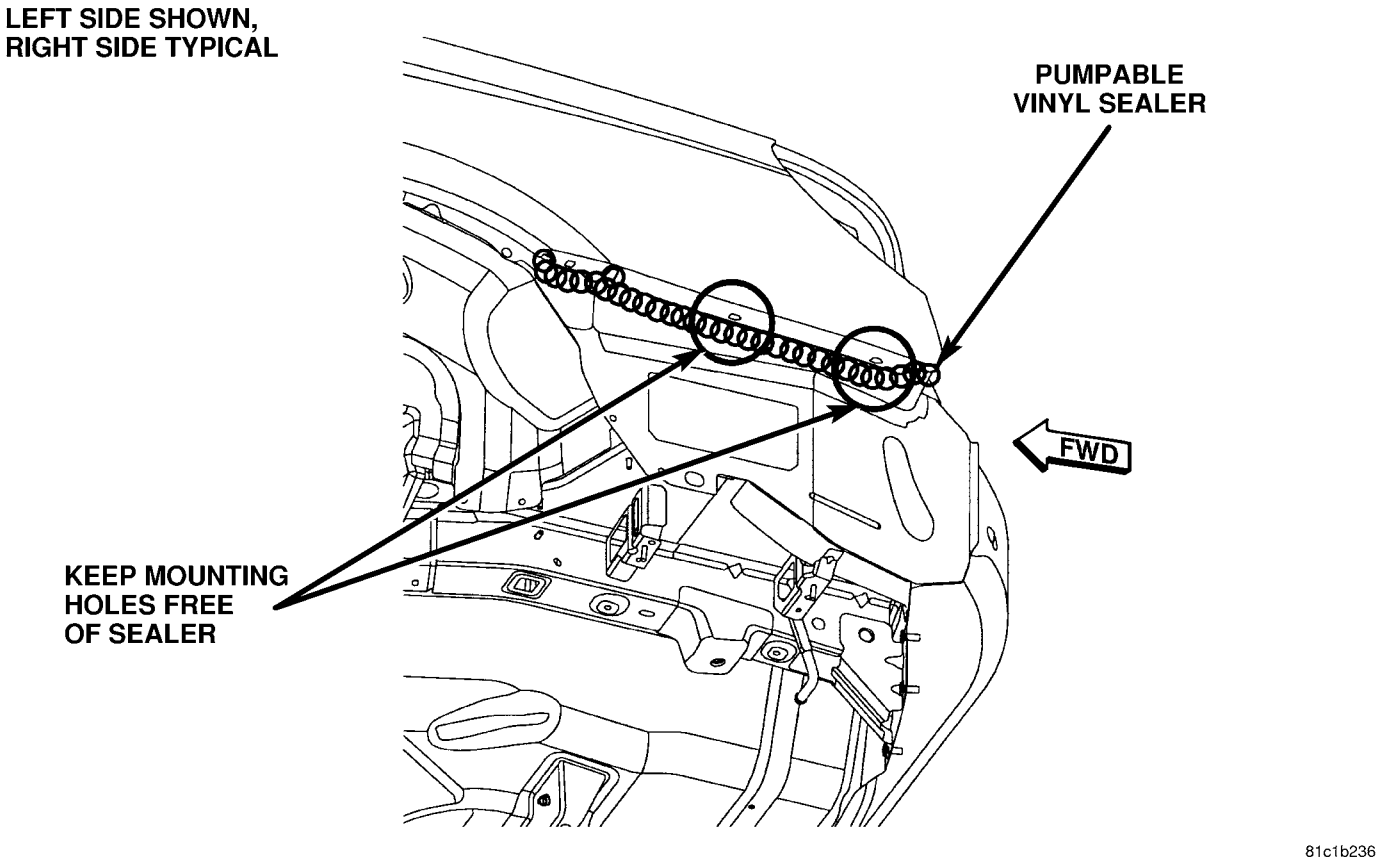

Figure 20. OUTER REAR QUARTER/REAR QUARTER REINFORCEMENT

Back to Index

BODY SEALER LOCATIONS

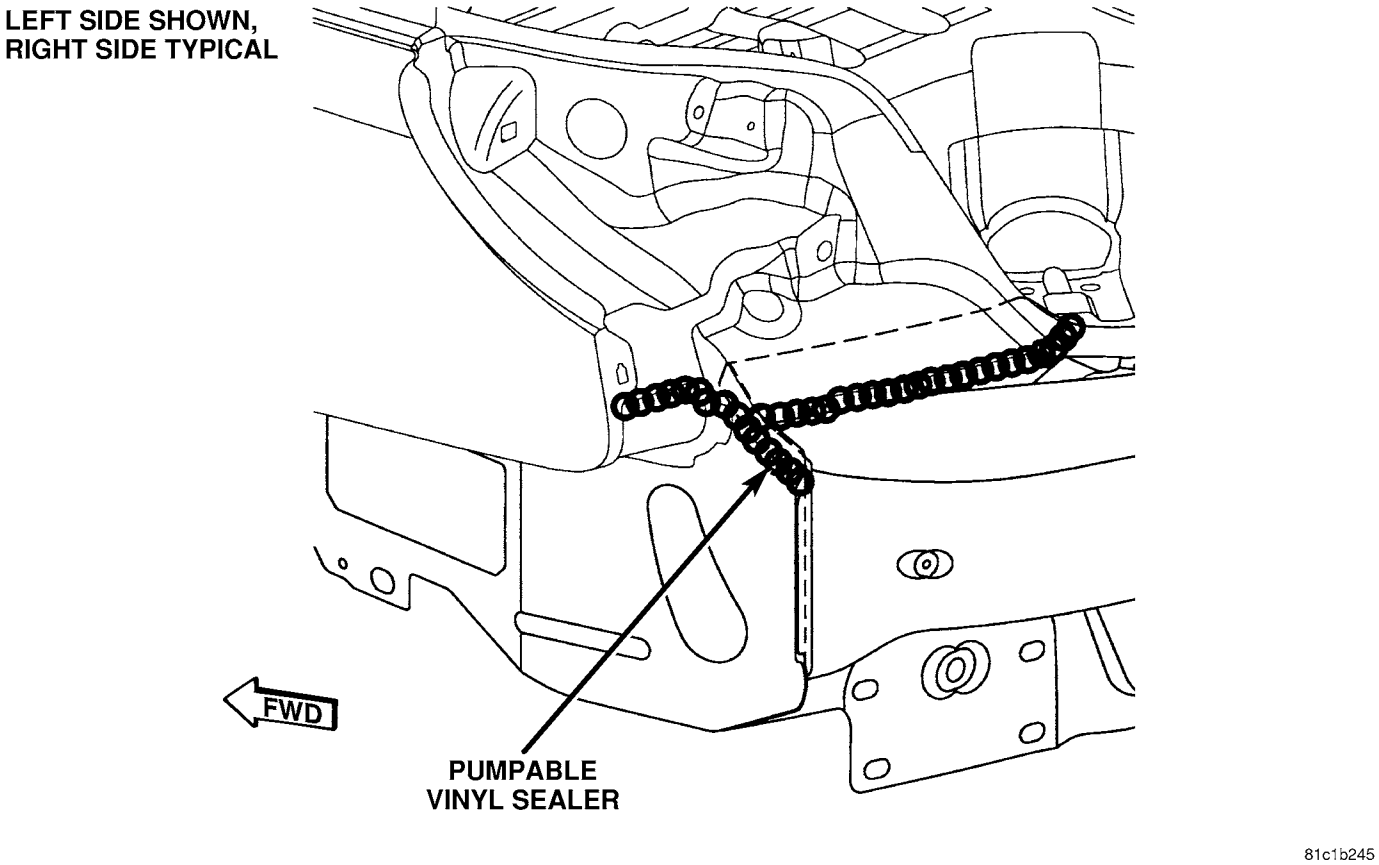

Figure 21. REAR TAIL LAMP CAN/REAR REINFORCEMENT

Back to Index

BODY SEALER LOCATIONS

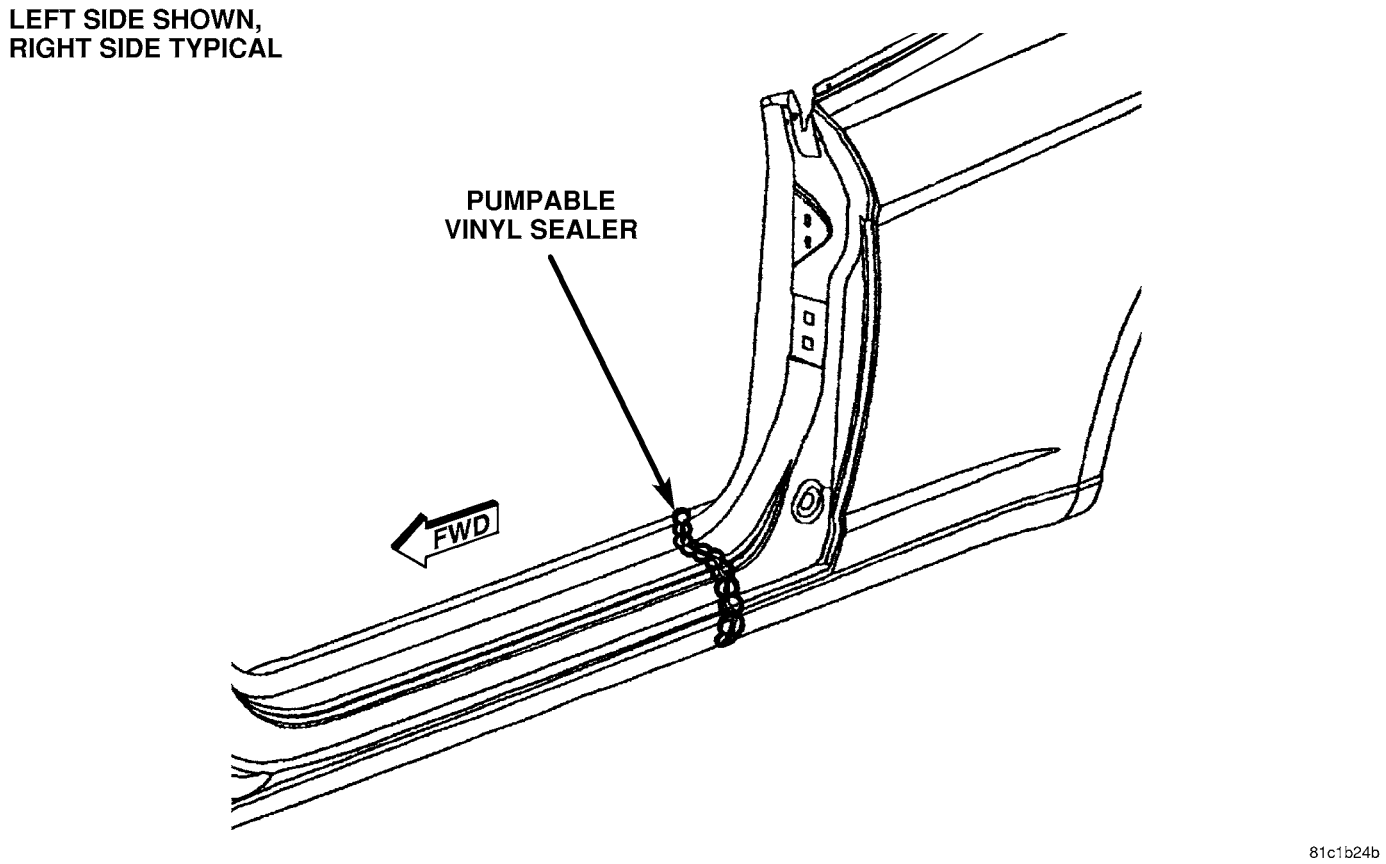

Figure 22. REAR QUARTER PANEL OUTER/OUTER SILL

Back to Index

BODY SEALER LOCATIONS

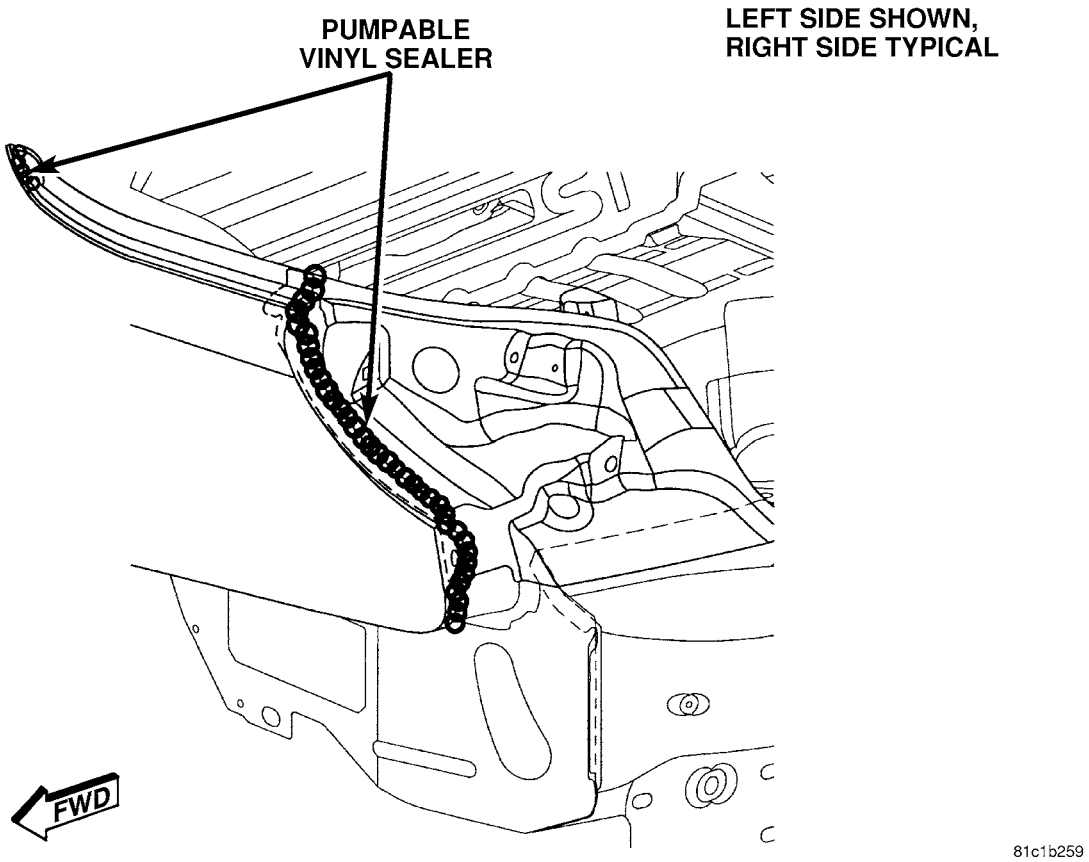

Figure 23. OUTER REAR QUARTER/QUARTER UPPER REINFORCEMENT AND LAMP

Back to Index

SEALER INFORMATION

SEALER AMOUNT/BEAD SIZE

4mm DIA* X 1000mm
PUMPABLE

* = DIAMETER

APPLICATION RECOMMENDATIONS

ALL REPAIRS WHERE PANELS WERE REPLACED HAVE VOIDS THAT MUST BE FILLED WITH SEALANT. SEALANT SHOULD BE APPLIED TO ALL SKIPS, PIN HOLES, IN SEALERS AND WELD BURN THROUGH HOLES ON THE INTE-RIOR AND EXTERIOR OF TH VEHICLE THAT WOULD PERMIT LEAKAGE OF WATER, AIR OR EXHAUST FUMES. TYPICAL AREAS OF THE EXTERIOR THAT MUST BE SEALED ARE LISTED IN THIS SECTION. AREAS OF THE INTERIOR THAT MUST BE SEALED ARE FLOOR PANS, WHEELHOUSES, DASH PANEL, AND COWL SIDES.

SEALER LEGEND

THUMBGRADE SEALER

PUMPABLE SEALER

HIDDEN SEALER

Back to Index

BODY SEALER LOCATIONS
CHRYSLER SEBRING/DODGE AVENGER

DESCRIPTION	FIGURE
PANEL COWL TOP/COWL SIDES	1
COWL TOP UPPER PANEL	2
WINDSHIELD HEADER/A-PILLAR	3
INNER COWL TOP/DASH PANEL	4
STEERING BRACKET SHAFT/DASH PANEL	5
DASH PANEL/FRONT FLOOR PAN	6
DASH PANEL/COWL SIDE	7
FLOOR PAN/REAR CROSSMEMBER	8
INNER SILL (1 OF 2)	9
INNER SILL (2 OF 2)	10
REAR FLOOR PAN/INNER WHEELHOUSE	11
REAR FLOOR PAN/WHEELHOUSE/SILL	12
REAR FLOOR PAN/QUARTER PANEL/WHEELHOUSE	13
REAR CLOSEOUT PANEL/QUARTER EXTENSION	14
INNER REAR QUARTER/WHEELHOUSE (1 OF 4)	15
INNER REAR QUARTER/WHEELHOUSE (2 OF 4)	16
INNER REAR QUARTER/WHEELHOUSE (3 OF 4)	17
INNER REAR QUARTER/WHEELHOUSE (4 OF 4)	18
ROOF/BODY SIDE APERTURE	19
BACK LITE FLANGE “U” CHANNEL/REINFORCEMENT	20
REAR FLOOR PAN (1 OF 3)	21
REAR FLOOR PAN (2 OF 3)	22
REAR FLOOR PAN (3 OF 3)	23

Preferred Mopar Product:

- Paintable Seam Sealer – Part No. 04318026

Back to Index

BODY SEALER LOCATIONS
CHRYSLER SEBRING/DODGE AVENGER

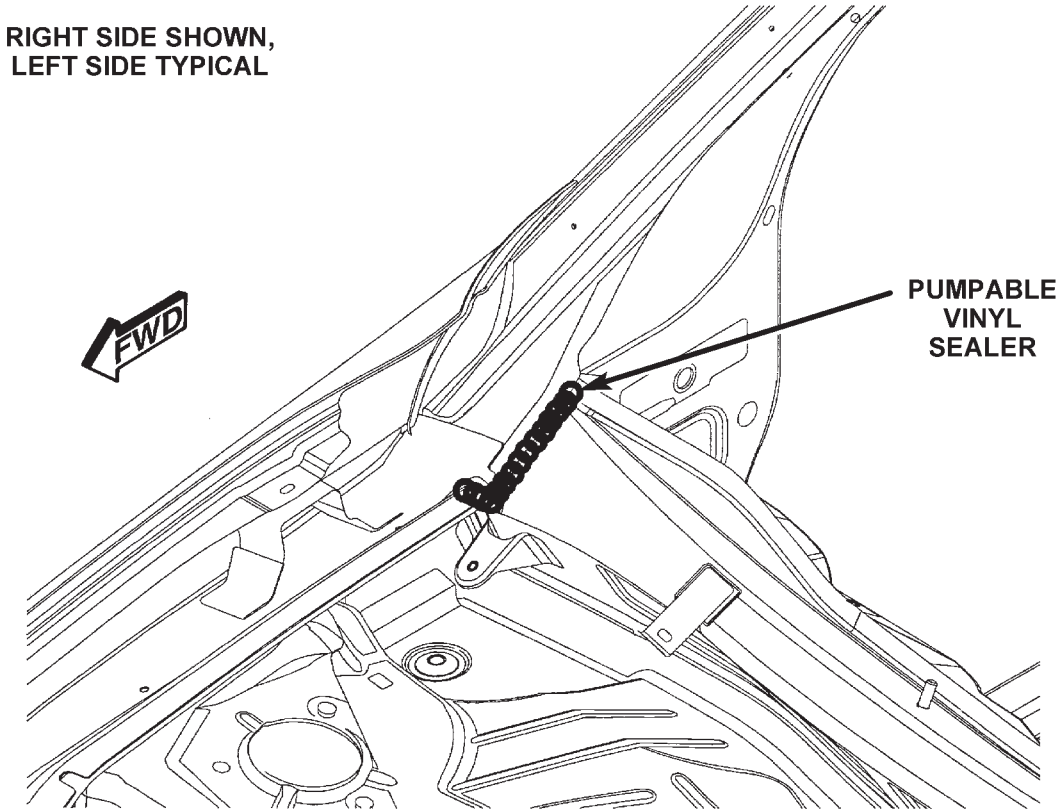

81a9a1b8

Figure 1. PANEL COWL TOP/PANEL SIDES

Back to Index

BODY SEALER LOCATIONS
CHRYSLER SEBRING/DODGE AVENGER

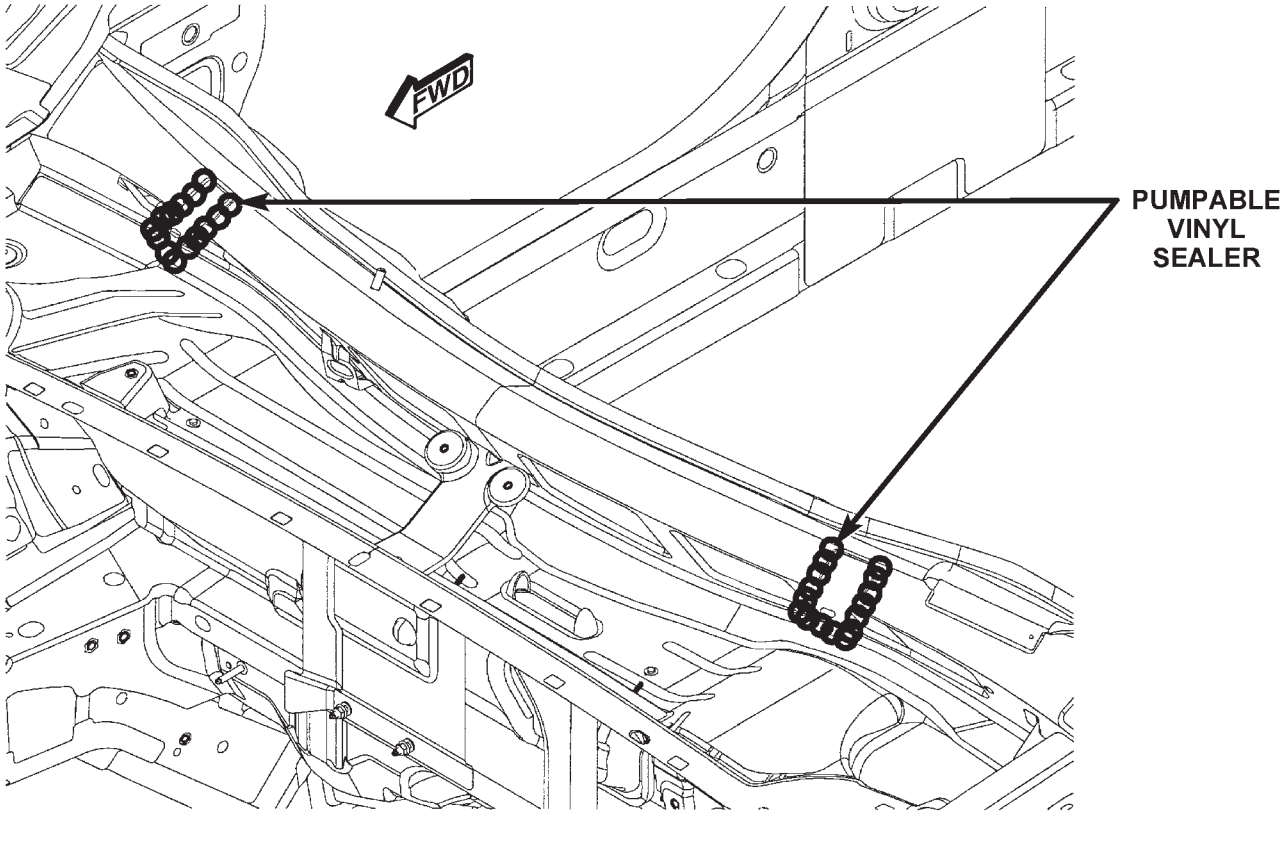

Figure 2. COWL TOP UPPER PANEL

Back to Index

BODY SEALER LOCATIONS
CHRYSLER SEBRING/DODGE AVENGER

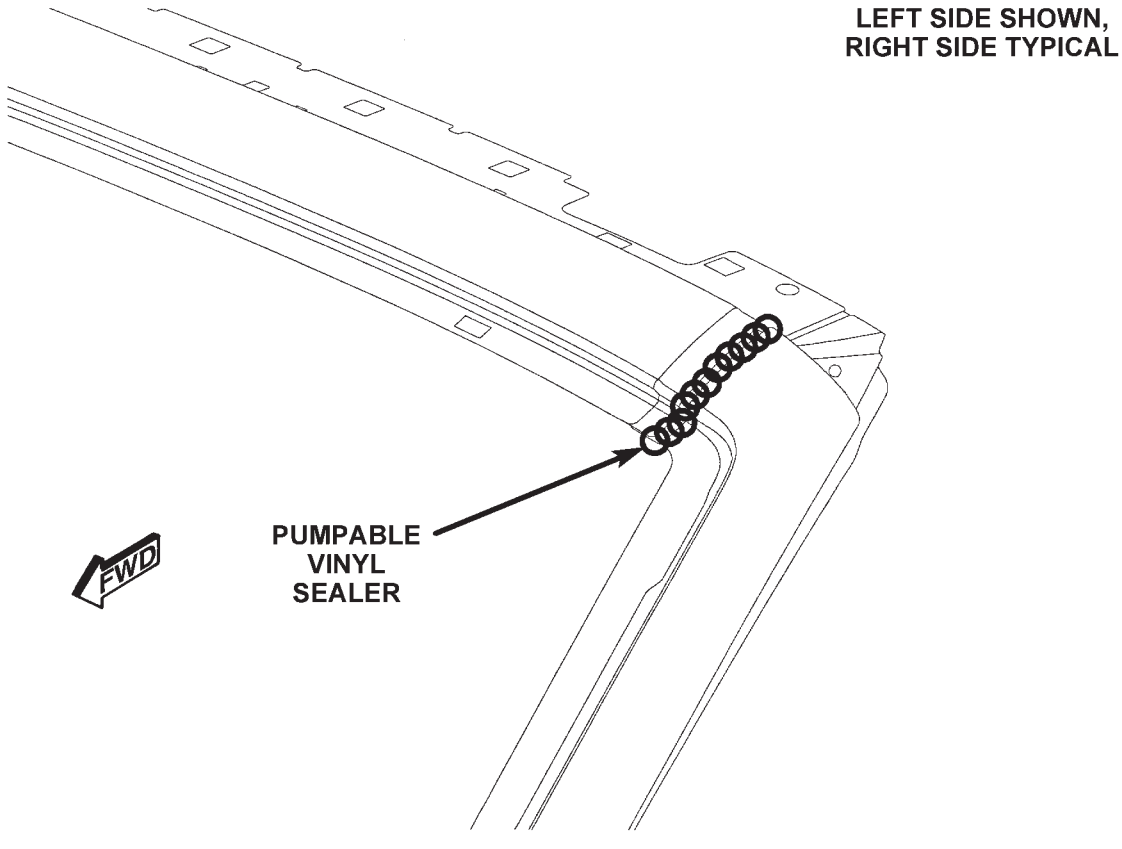

Figure 3. WINDSHIELD HEADER/A-PILLAR

Back to Index

BODY SEALER LOCATIONS
CHRYSLER SEBRING/DODGE AVENGER

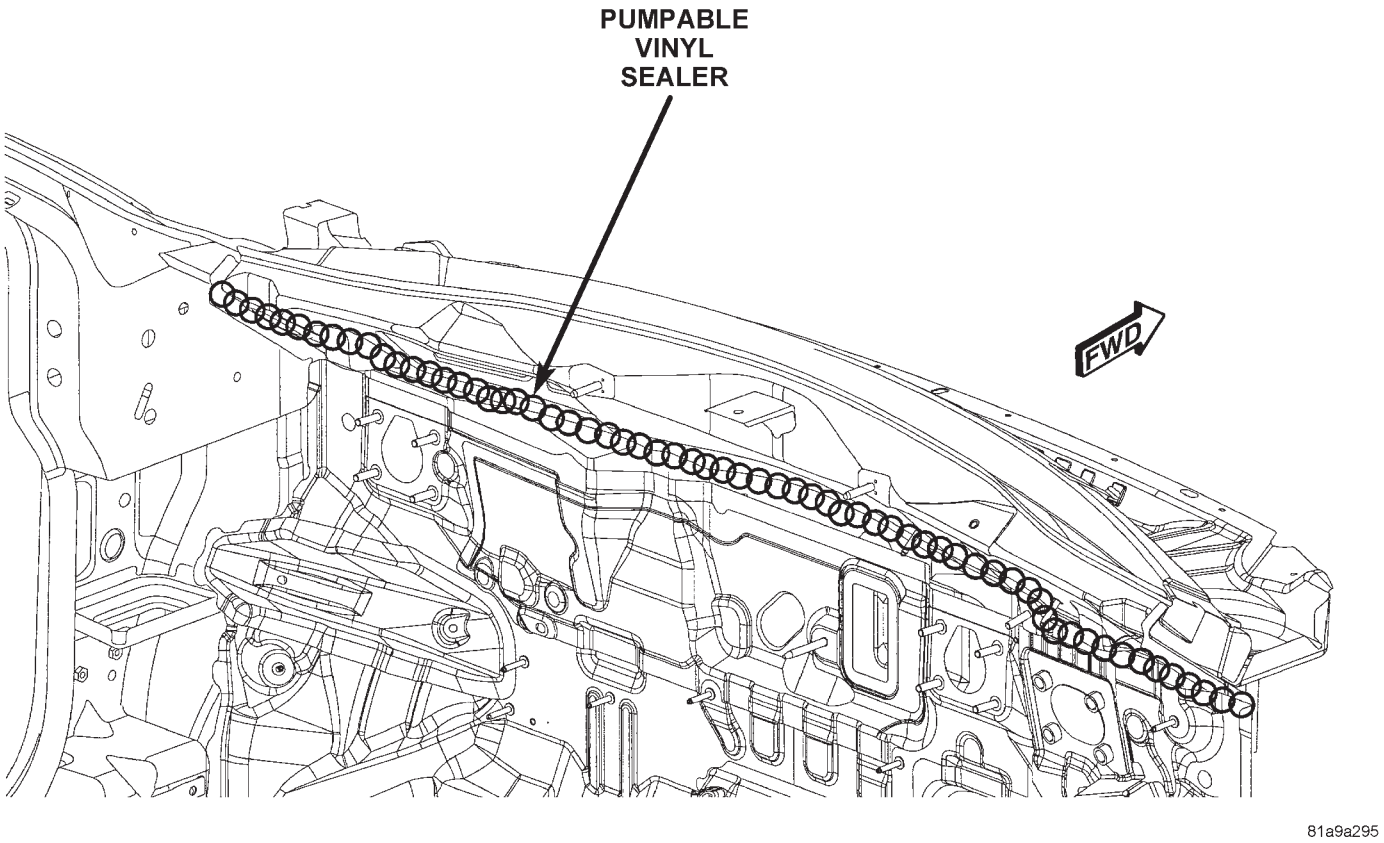

Figure 4. INNER COWL TOP/DASH PANEL

Back to Index

BODY SEALER LOCATIONS
CHRYSLER SEBRING/DODGE AVENGER

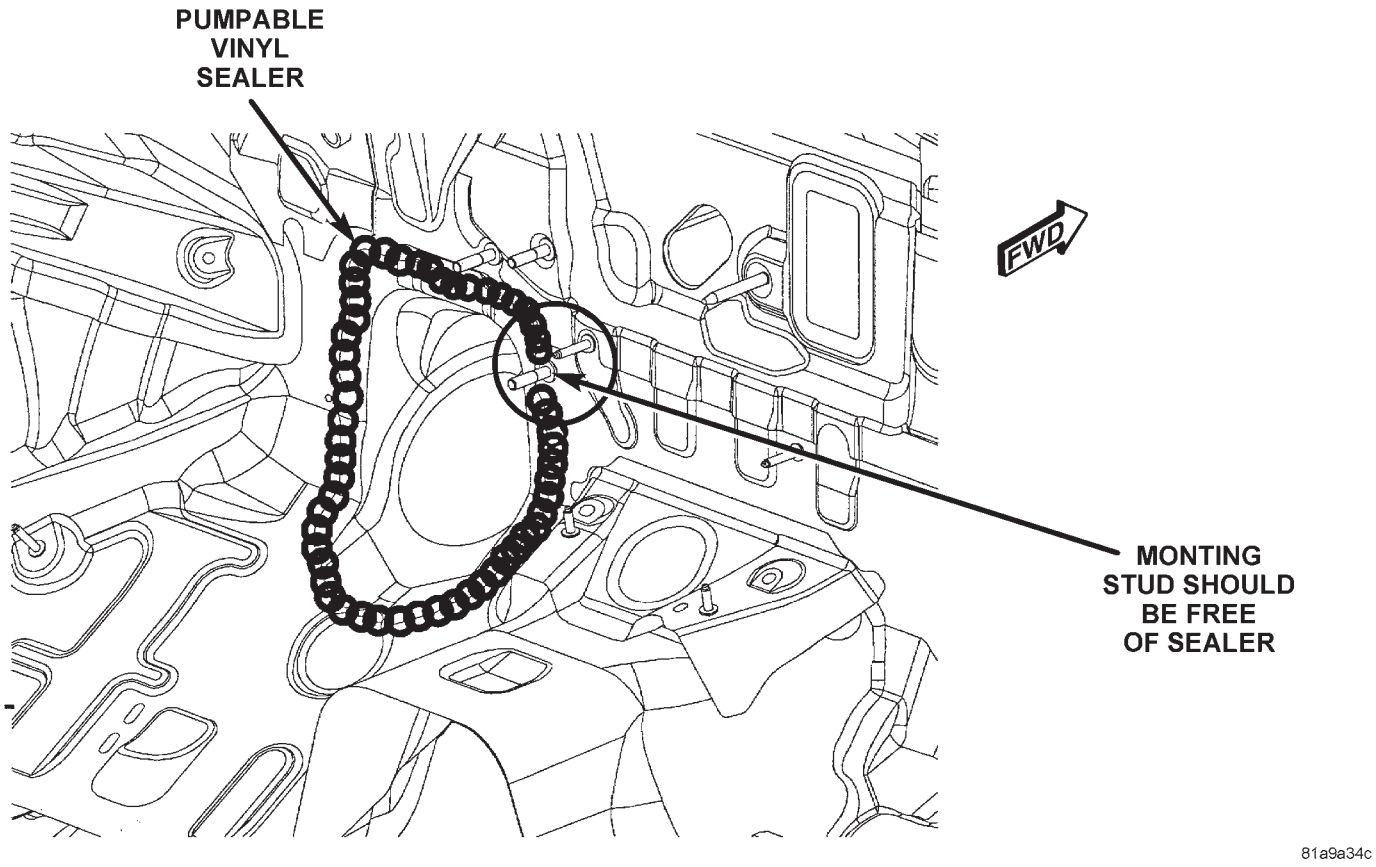

Figure 5. STEERING BRACKET SHAFT/DASH PANEL

Back to Index

BODY SEALER LOCATIONS
CHRYSLER SEBRING/DODGE AVENGER

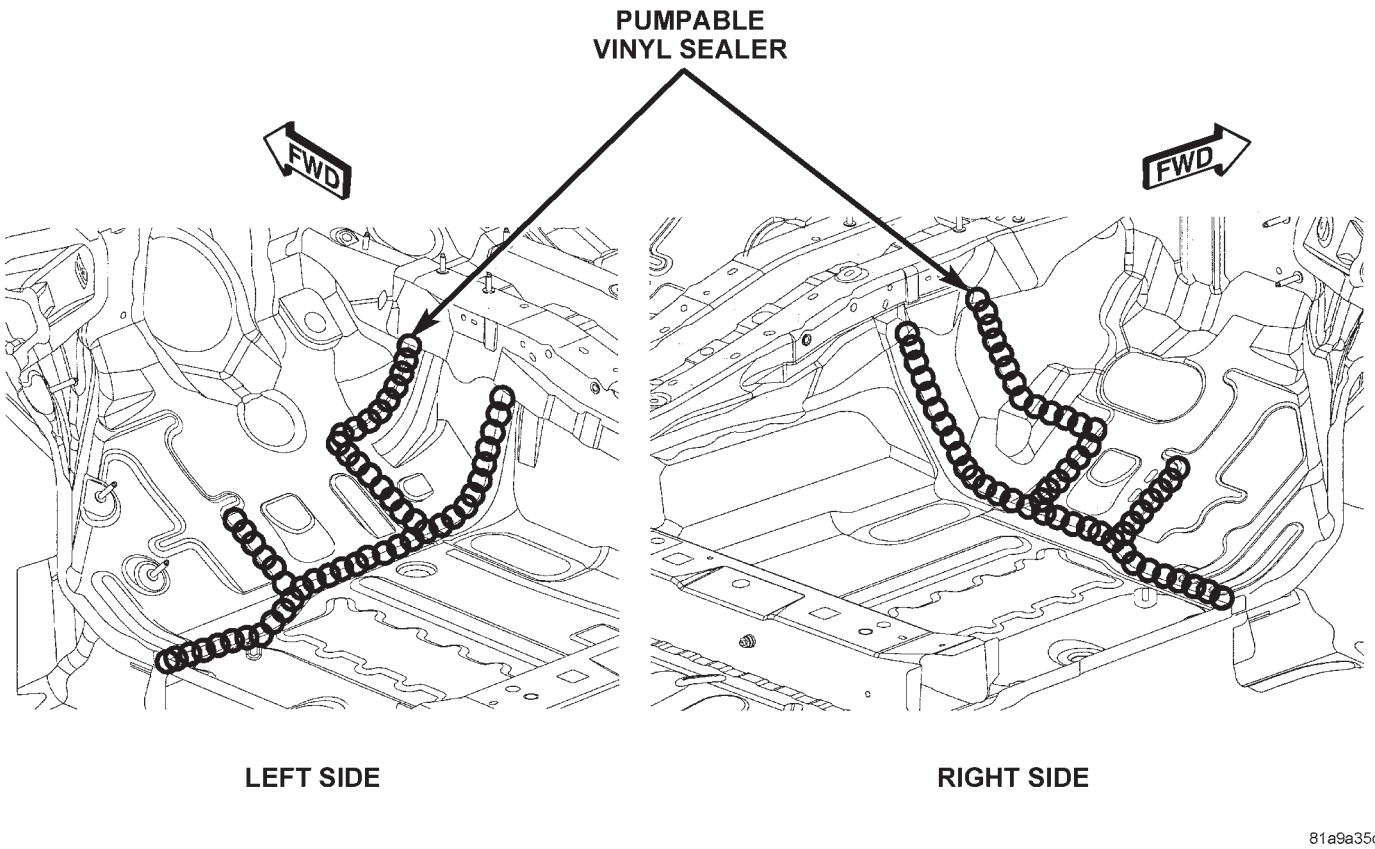

Figure 6. DASH PANEL/FRONT FLOOR PAN

Back to Index

BODY SEALER LOCATIONS
CHRYSLER SEBRING/DODGE AVENGER

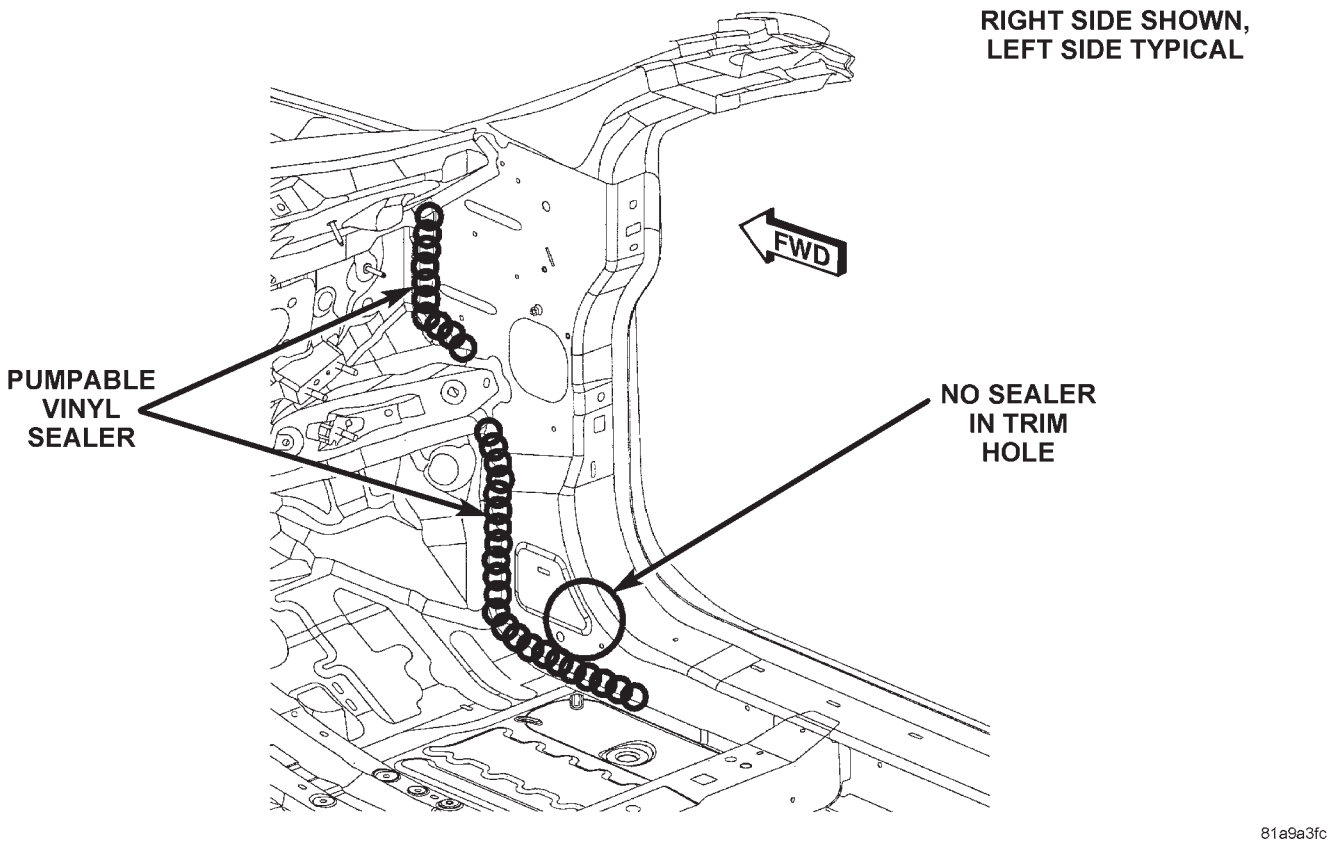

Figure 7. DASH PANEL/COWL SIDE

Back to Index

BODY SEALER LOCATIONS
CHRYSLER SEBRING/DODGE AVENGER

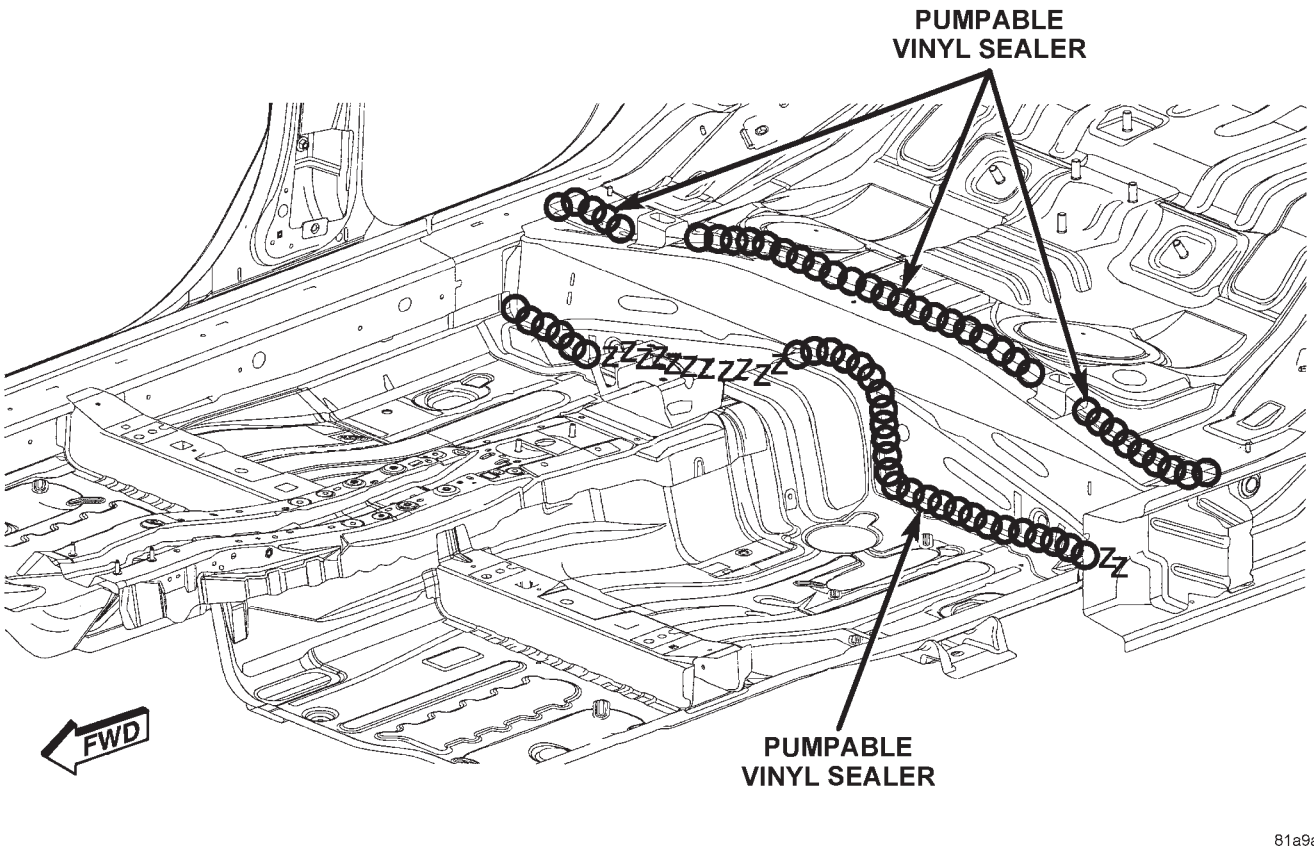

Figure 8. FLOOR PAN/REAR CROSSMEMBER

Back to Index

BODY SEALER LOCATIONS
CHRYSLER SEBRING/DODGE AVENGER

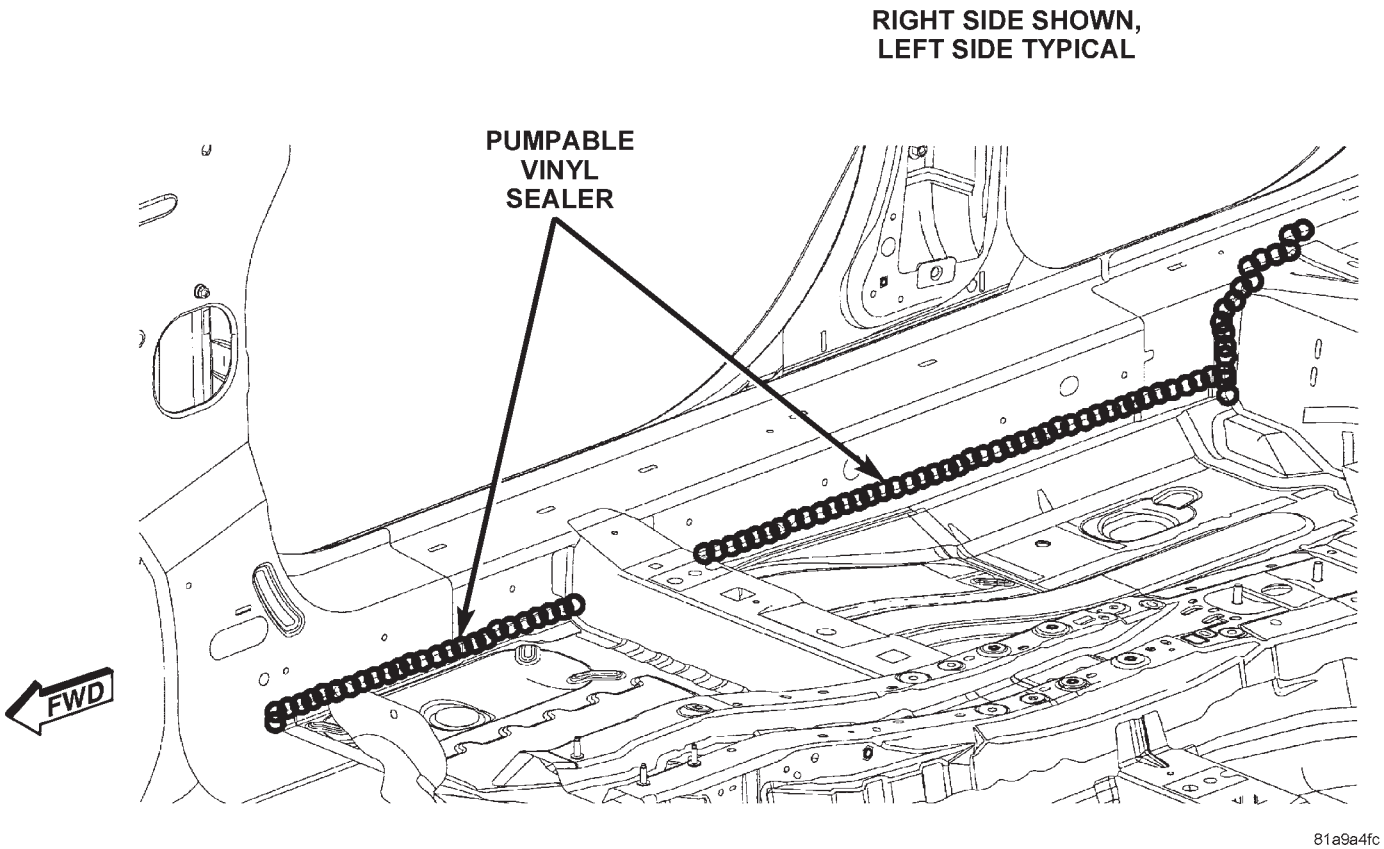

Figure 9. INNER SEAL (1 OF 2)

Back to Index

BODY SEALER LOCATIONS
CHRYSLER SEBRING/DODGE AVENGER

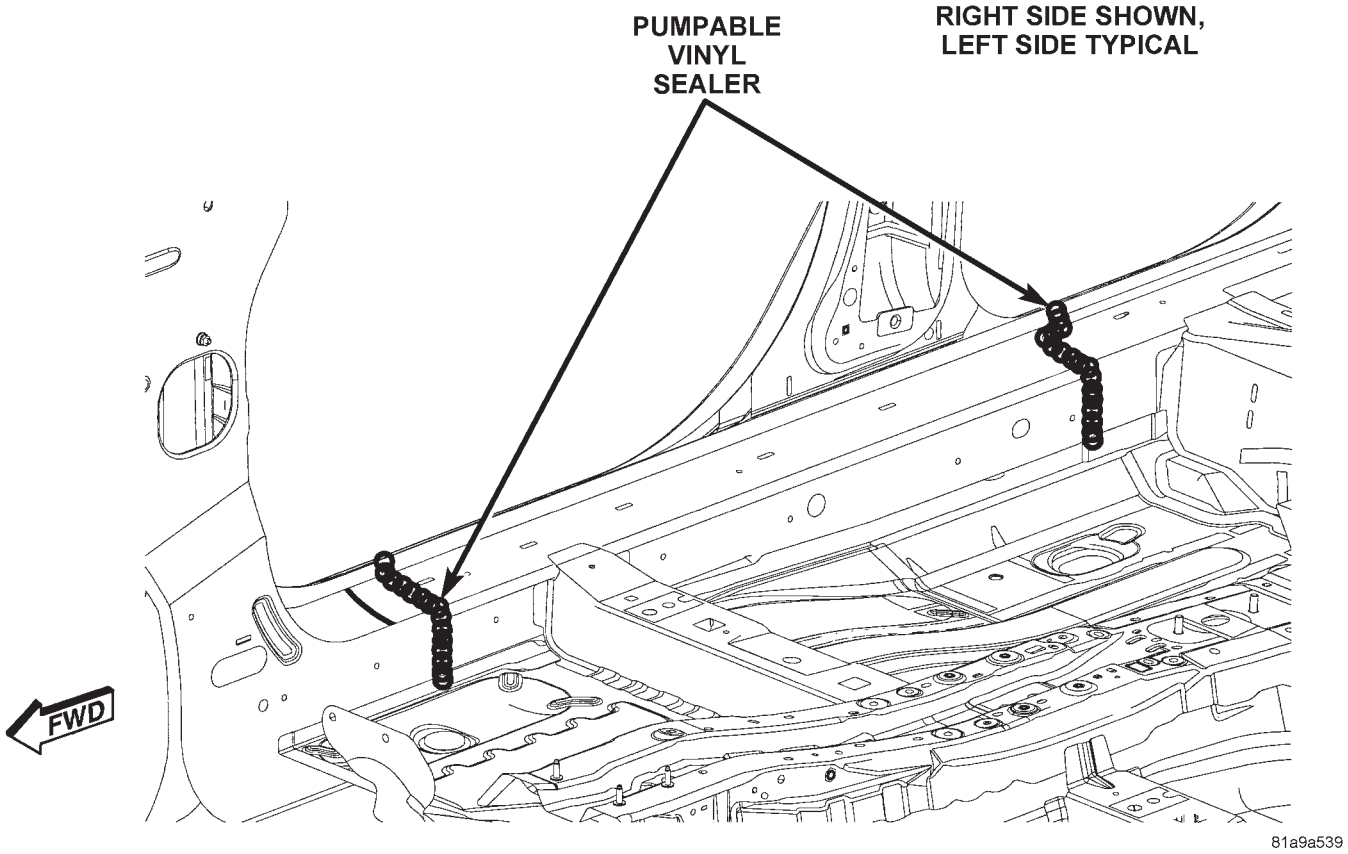

Figure 10. INNER SILL (2 OF 2)

Back to Index

BODY SEALER LOCATIONS
CHRYSLER SEBRING/DODGE AVENGER

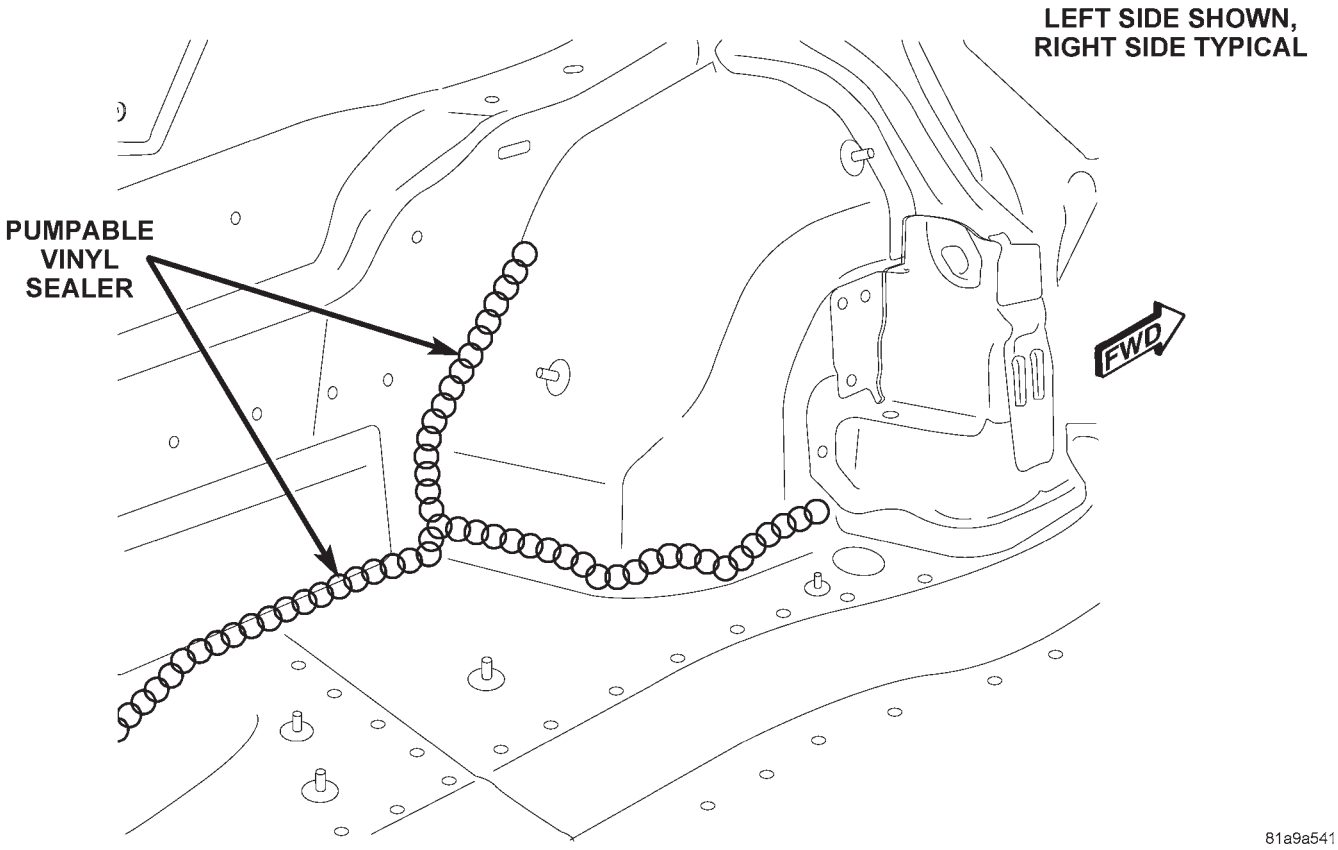

Figure 11. REAR FLOOR/INNER WHEELHOUSE

Back to Index

BODY SEALER LOCATIONS
CHRYSLER SEBRING/DODGE AVENGER

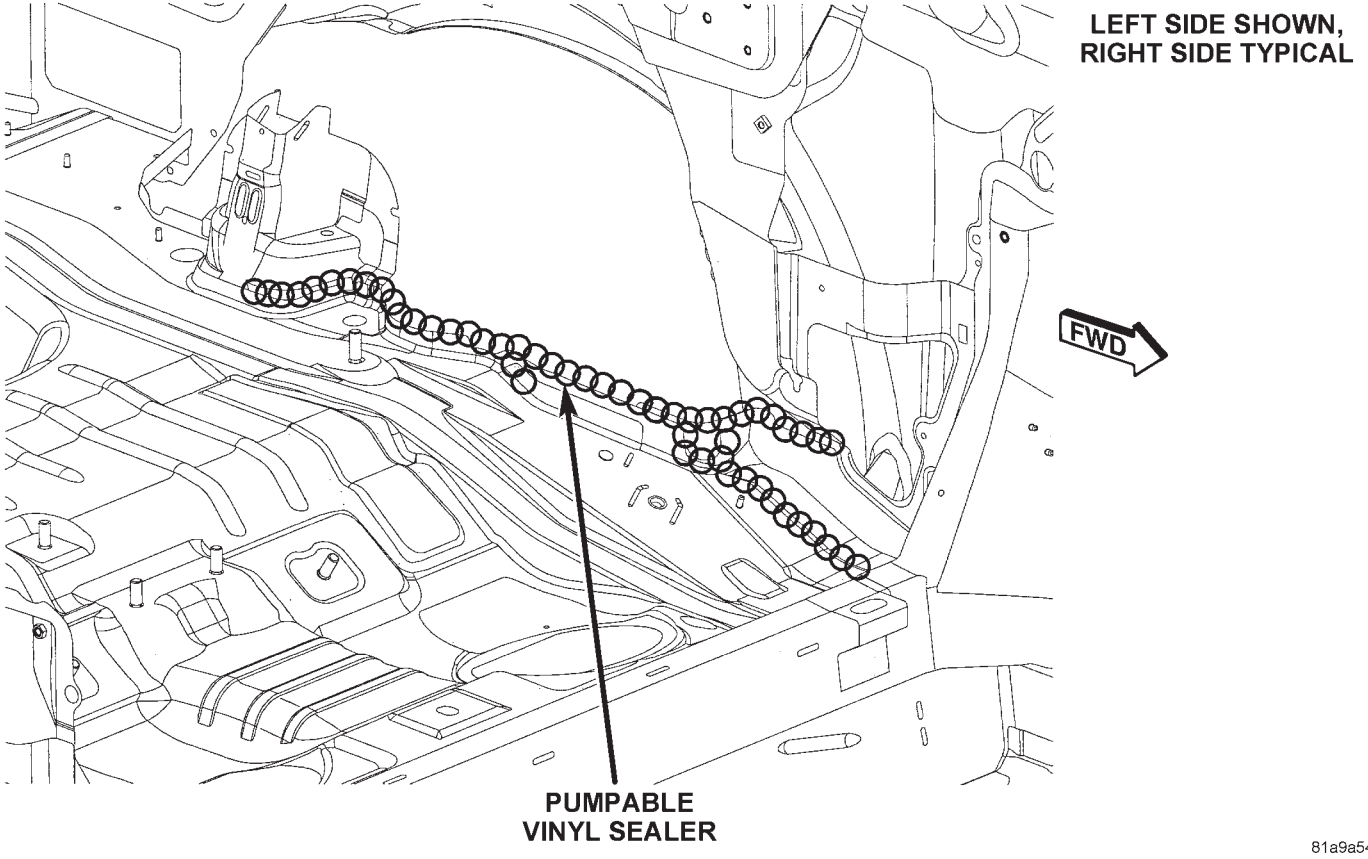

Figure 12. REAR FLOOR PAN/WHEELHOUSE/SILL

Back to Index

BODY SEALER LOCATIONS
CHRYSLER SEBRING/DODGE AVENGER

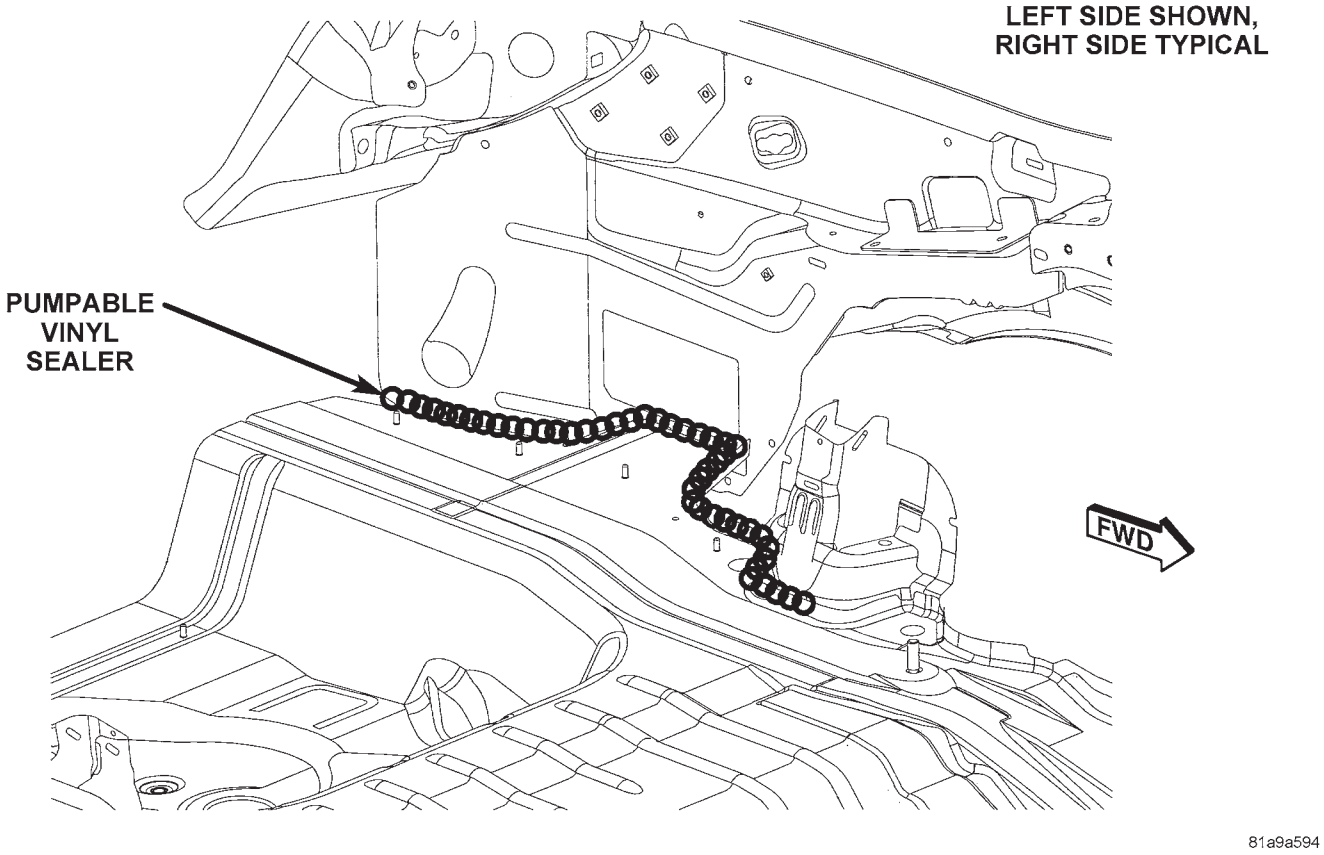

Figure 13. REAR FLOOR PAN/QUARTER PANEL/WHEELHOUSE

Back to Index

BODY SEALER LOCATIONS
CHRYSLER SEBRING/DODGE AVENGER

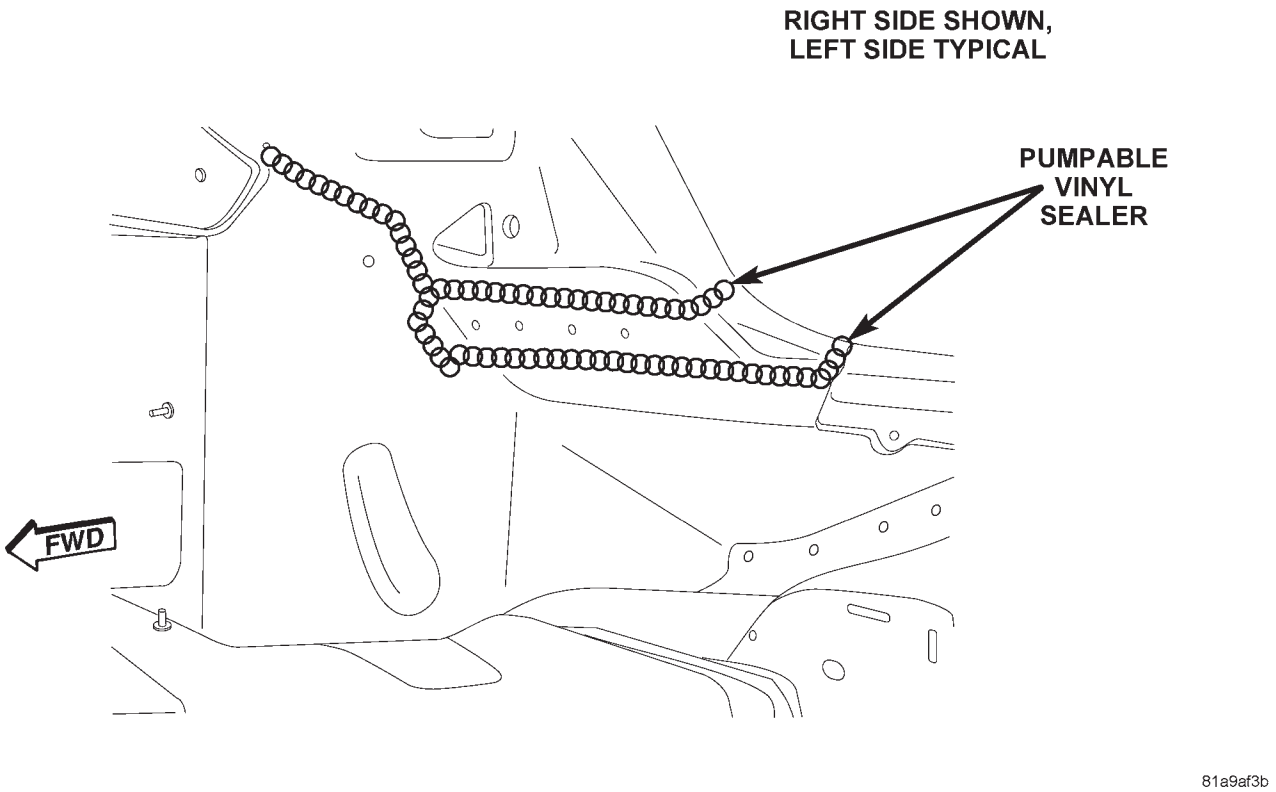

Figure 14. REAR CLOSEOUT PANEL/QUARTER EXTENSION

Back to Index

BODY SEALER LOCATIONS
CHRYSLER SEBRING/DODGE AVENGER

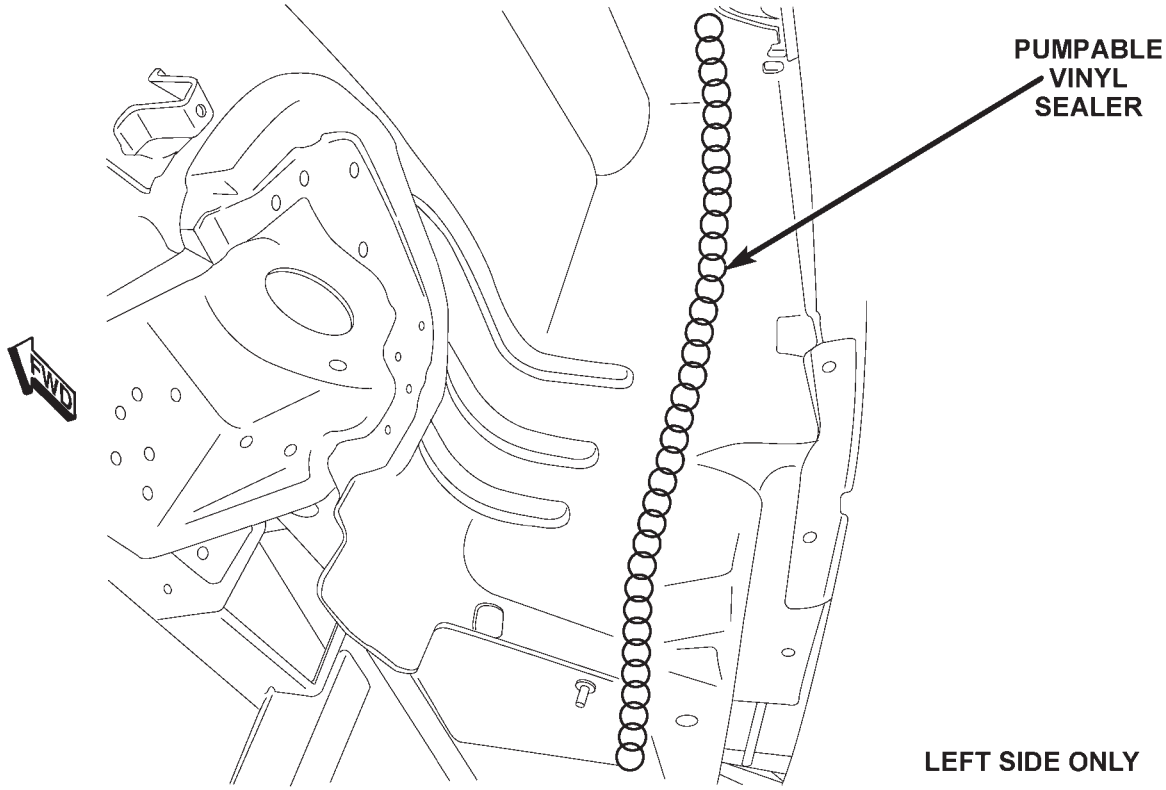

Figure 15. INNER REAR QUARTER/WHEELHOUSE (1 OF 4)

Back to Index

BODY SEALER LOCATIONS
CHRYSLER SEBRING/DODGE AVENGER

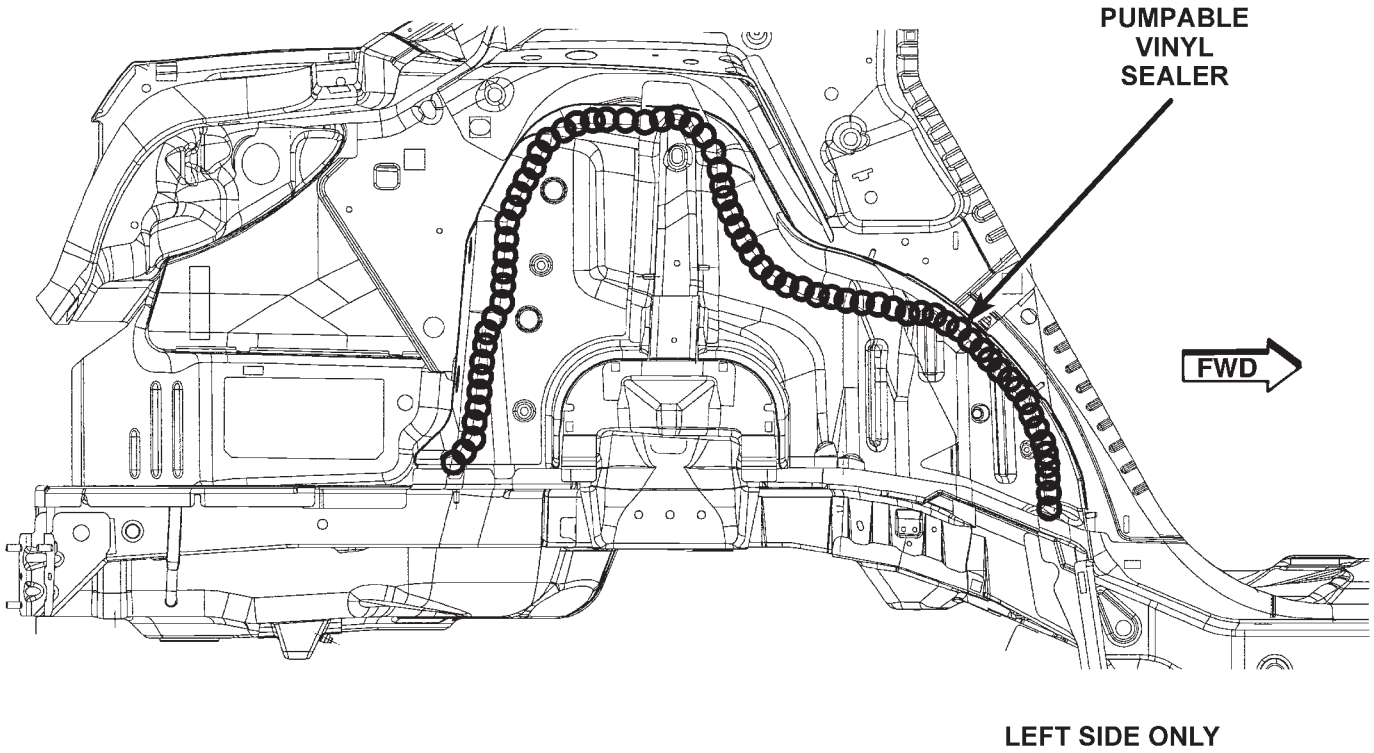

Figure 16. INNER REAR QUARTER/WHEELHOUSE (2 OF 4)

Back to Index

BODY SEALER LOCATIONS
CHRYSLER SEBRING/DODGE AVENGER

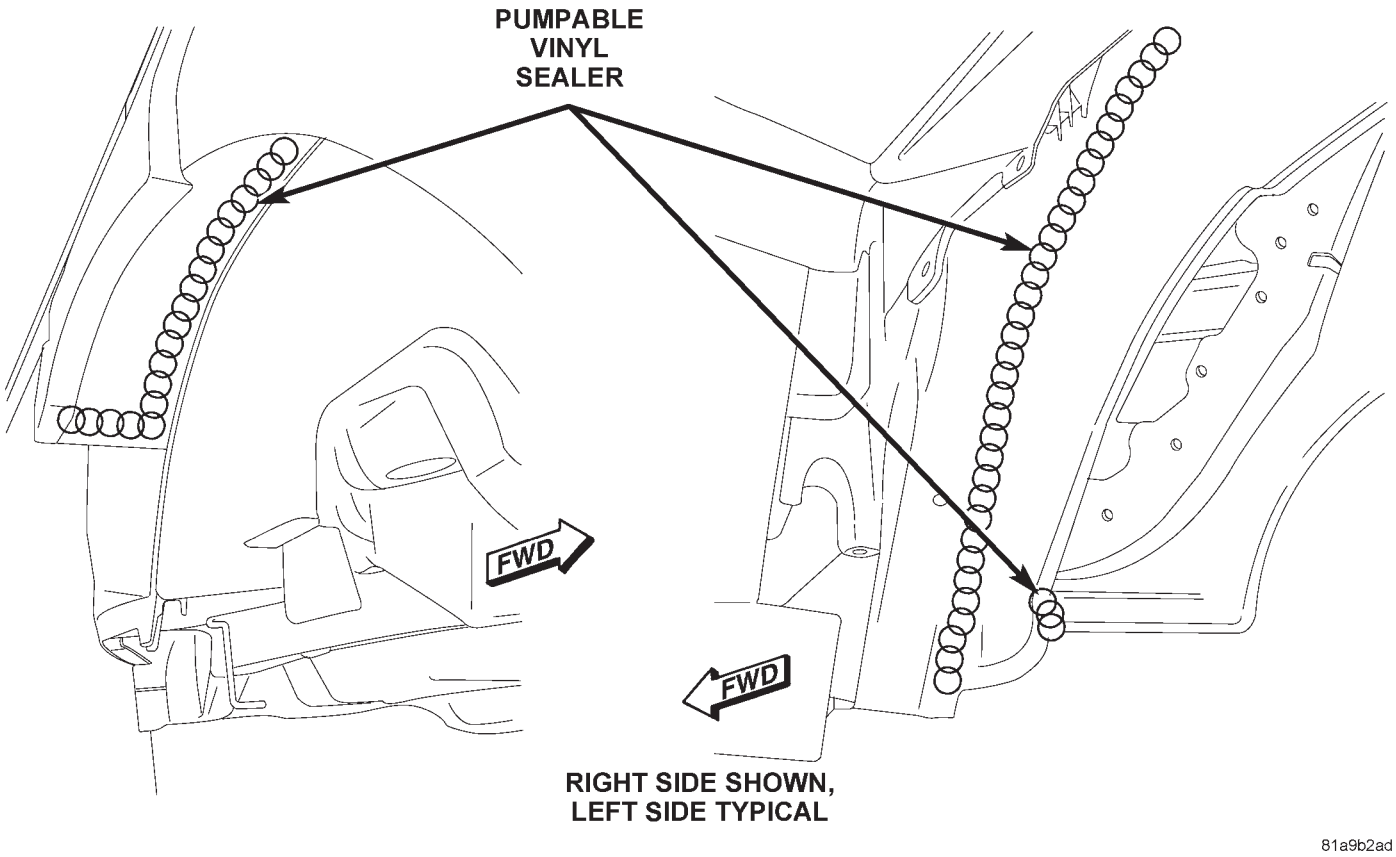

Figure 17. INNER REAR QUARTER/WHEELHOUSE (3 OF 4)

Back to Index

BODY SEALER LOCATIONS
CHRYSLER SEBRING/DODGE AVENGER

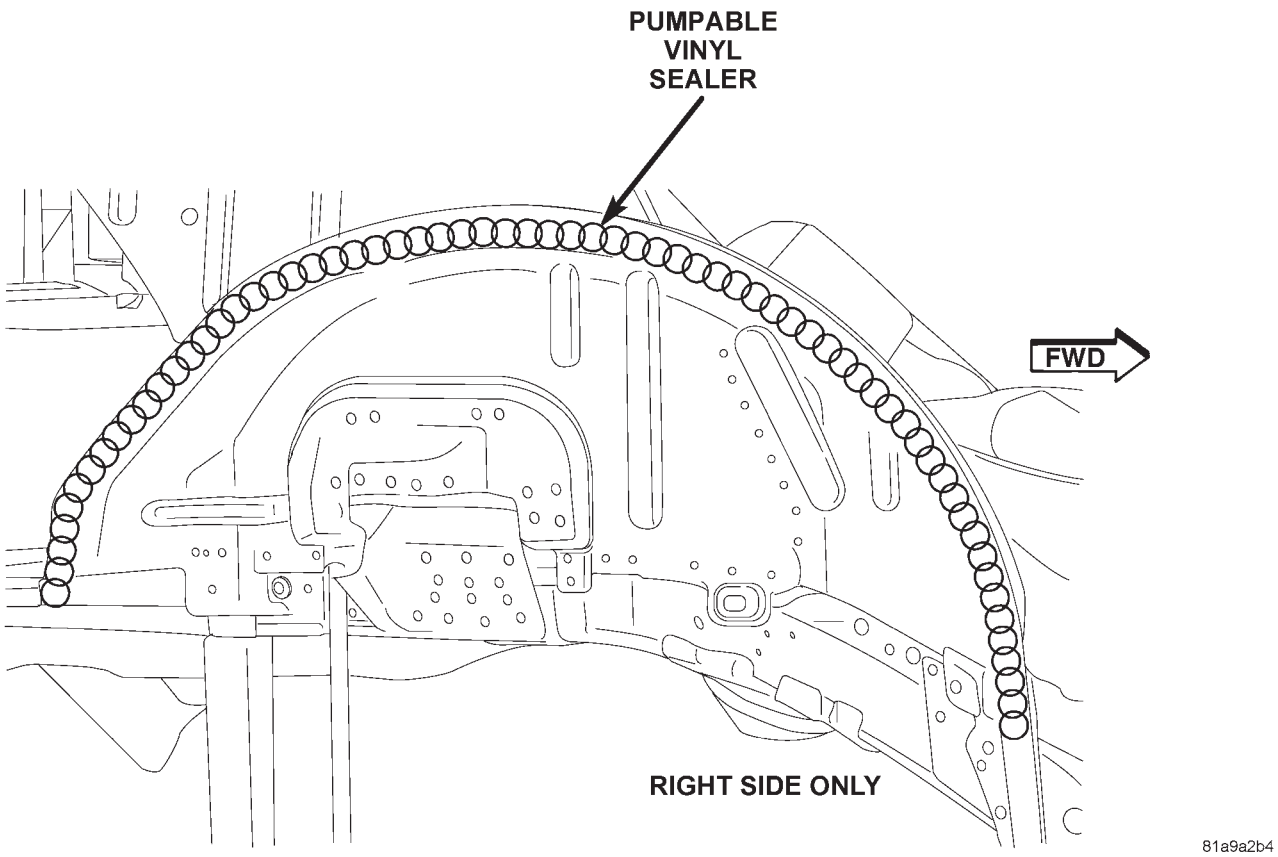

Figure 18. INNER QUARTER/WHEELHOUSE (4 OF 4)

Back to Index

BODY SEALER LOCATIONS
CHRYSLER SEBRING/DODGE AVENGER

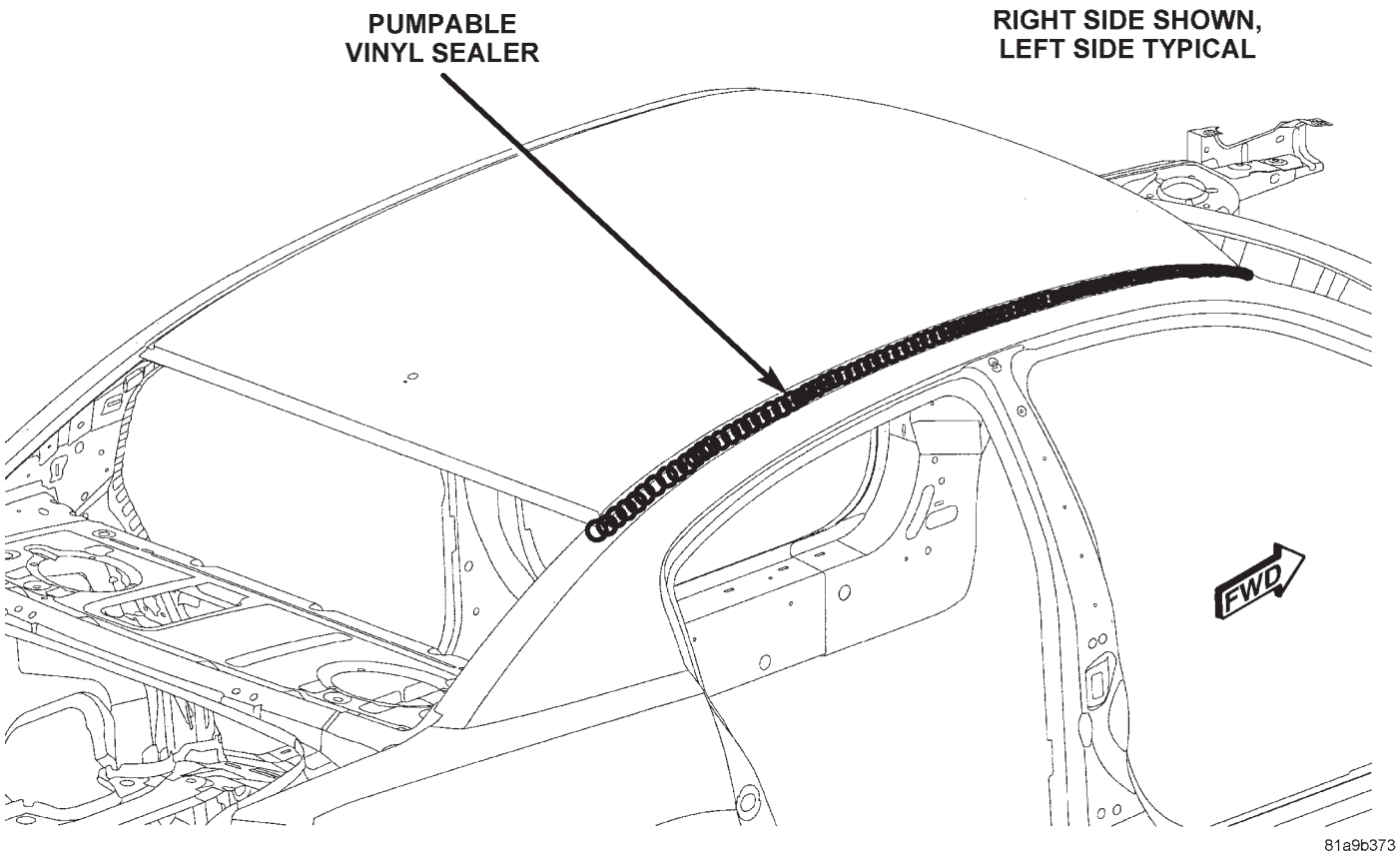

Figure 19. ROOF/BODY SIDE APERTURE

Back to Index

BODY SEALER LOCATIONS
CHRYSLER SEBRING/DODGE AVENGER

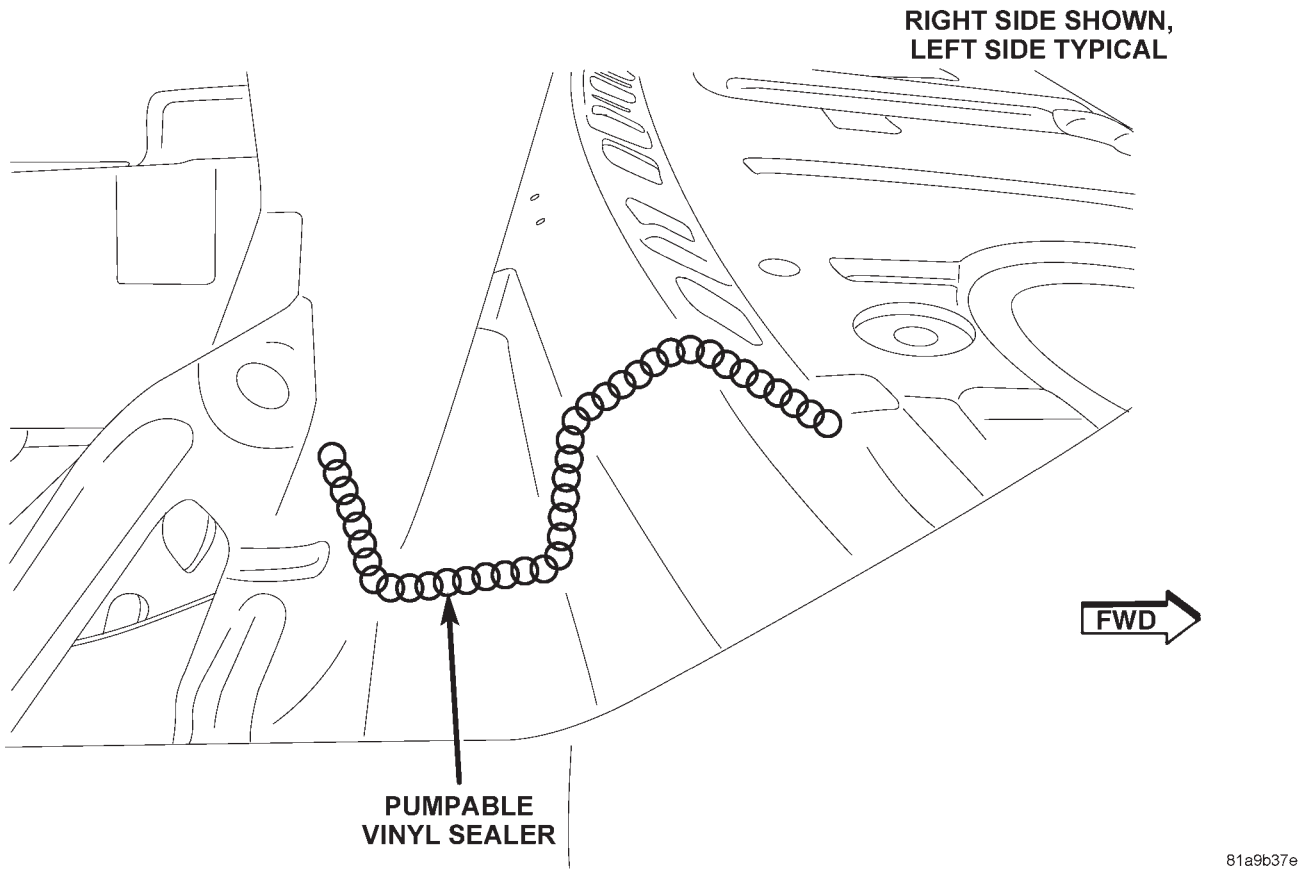

Figure 20. BACKLITE FLANGE “U” CHANNEL/REINFORCEMENT

Back to Index

BODY SEALER LOCATIONS
CHRYSLER SEBRING/DODGE AVENGER

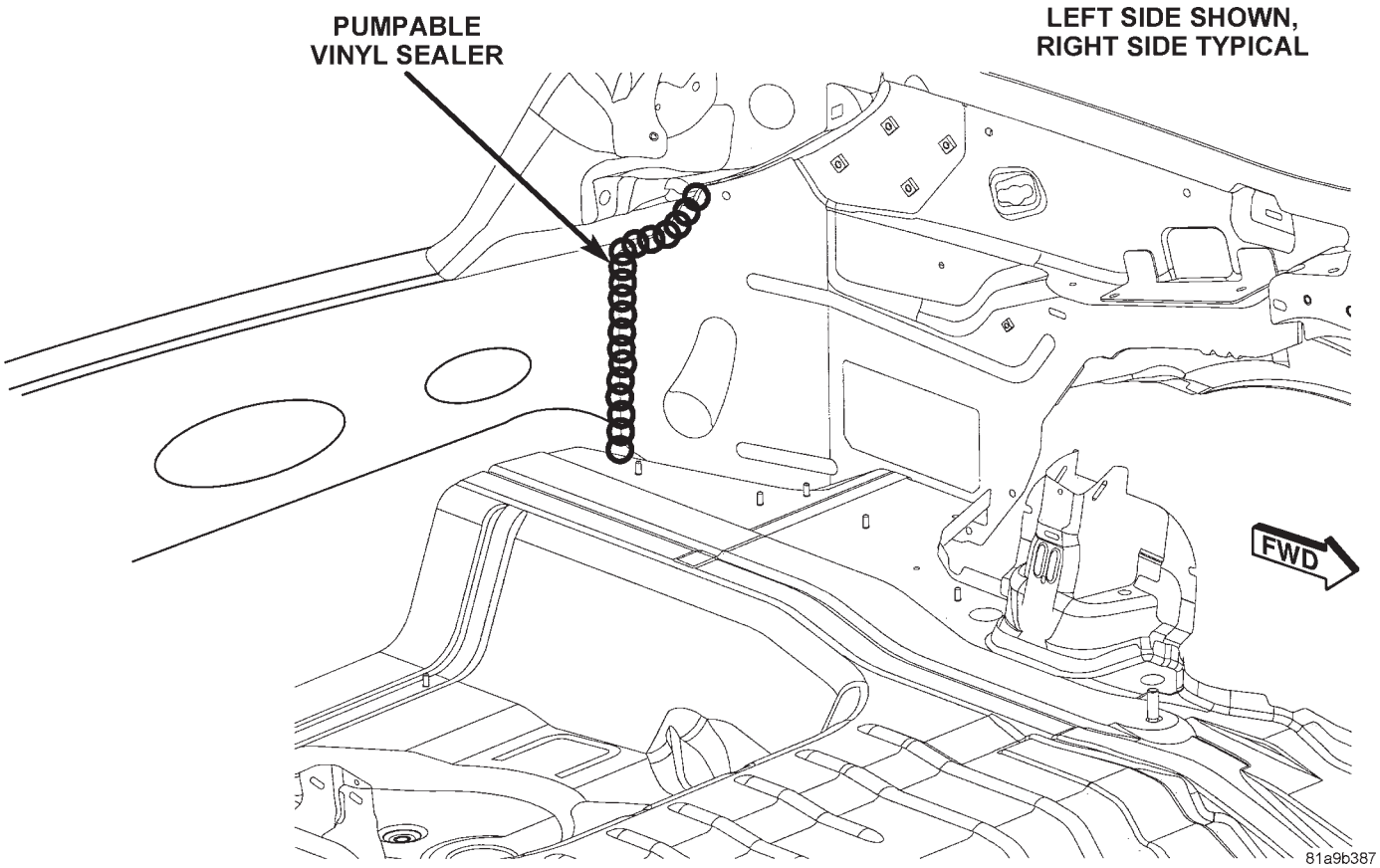

Figure 21. REAR FLOOR PAN (1 OF 3)

Back to Index

BODY SEALER LOCATIONS
CHRYSLER SEBRING/DODGE AVENGER

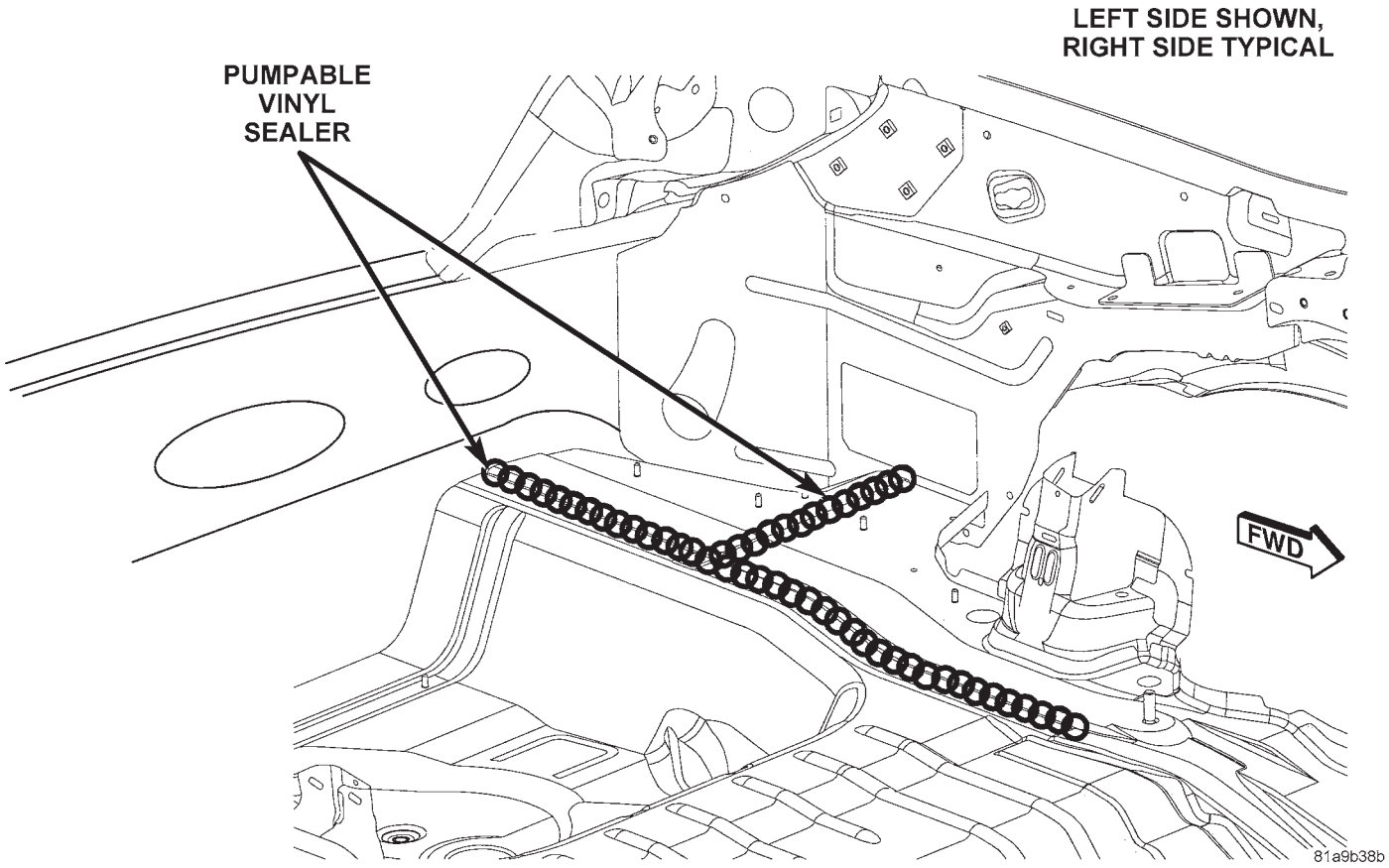

Figure 22. REAR FLOOR PAN (2 OF 3)

Back to Index

BODY SEALER LOCATIONS
CHRYSLER SEBRING/DODGE AVENGER

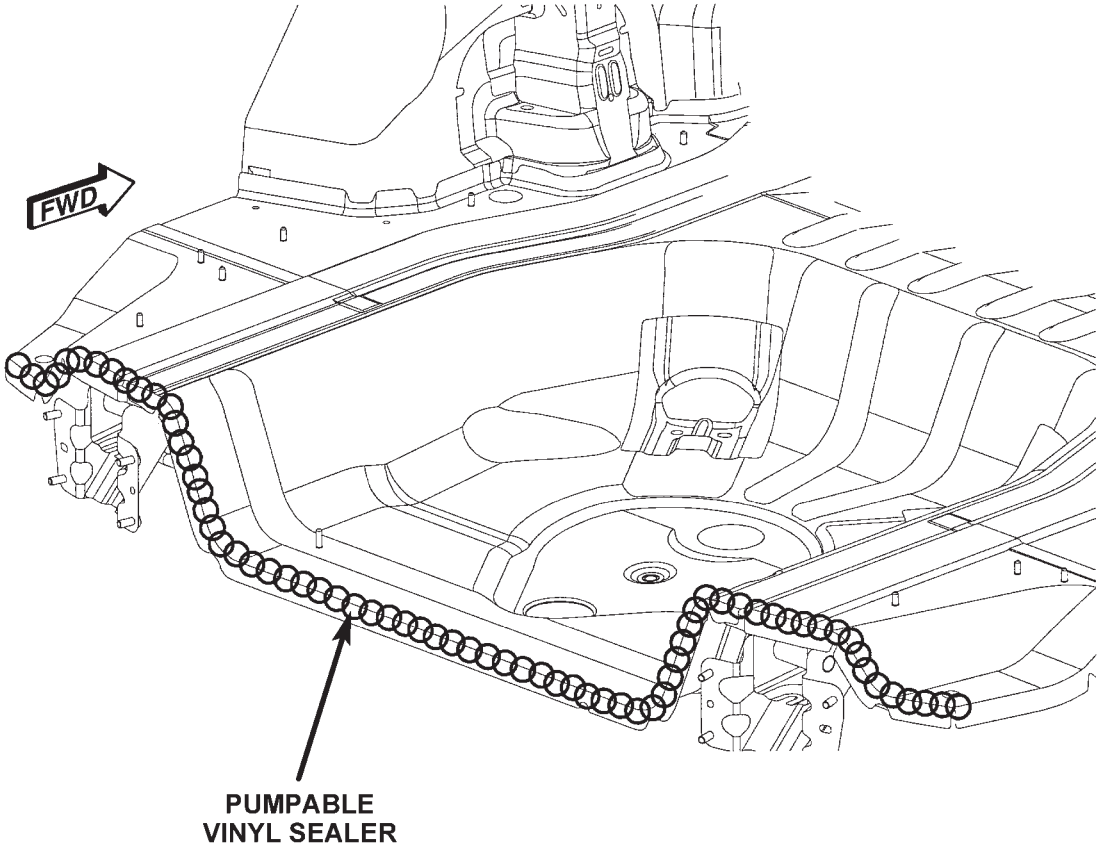

81a9ba5a

Figure 23. REAR FLOOR PAN (3 OF 3)

Back to Index

BODY SEALER LOCATIONS
CHRYSLER SEBRING ONLY

DESCRIPTION	FIGURE
BODY SIDE APERTURE/QUARTER PANEL EXTENSION	1
BODY SIDE APERTURE/DRAIN TROUGH OUTER PANEL	2
BODY SIDE APERTURE/TAIL LAMP PANEL	3

Preferred Mopar Product:

- Paintable Seam Sealer – Part No. 04318026

Back to Index

BODY SEALER LOCATIONS
CHRYSLER SEBRING ONLY

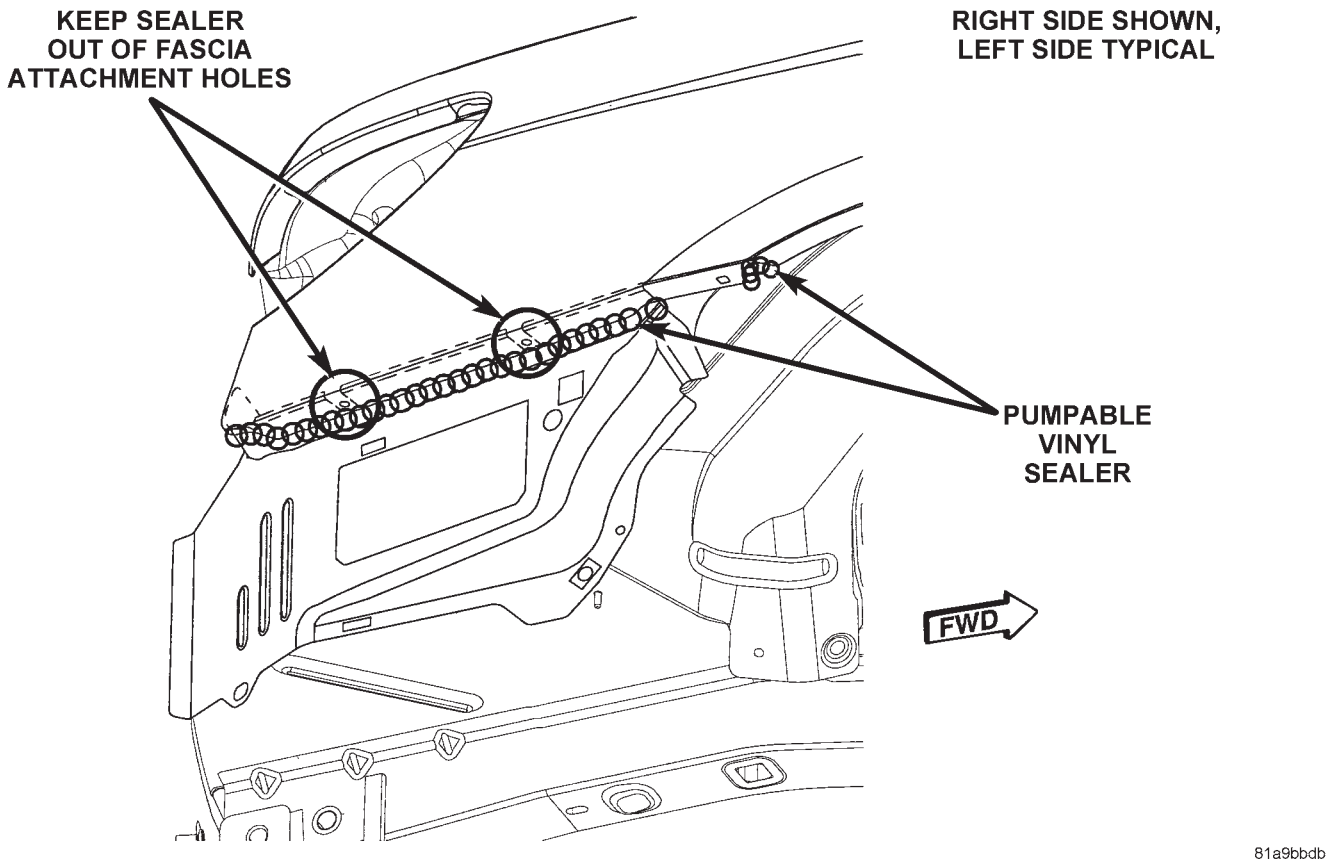

Figure 1. BODY SIDE APERTURE/QUARTER PANEL EXTENSION

Back to Index

BODY SEALER LOCATIONS
CHRYSLER SEBRING ONLY

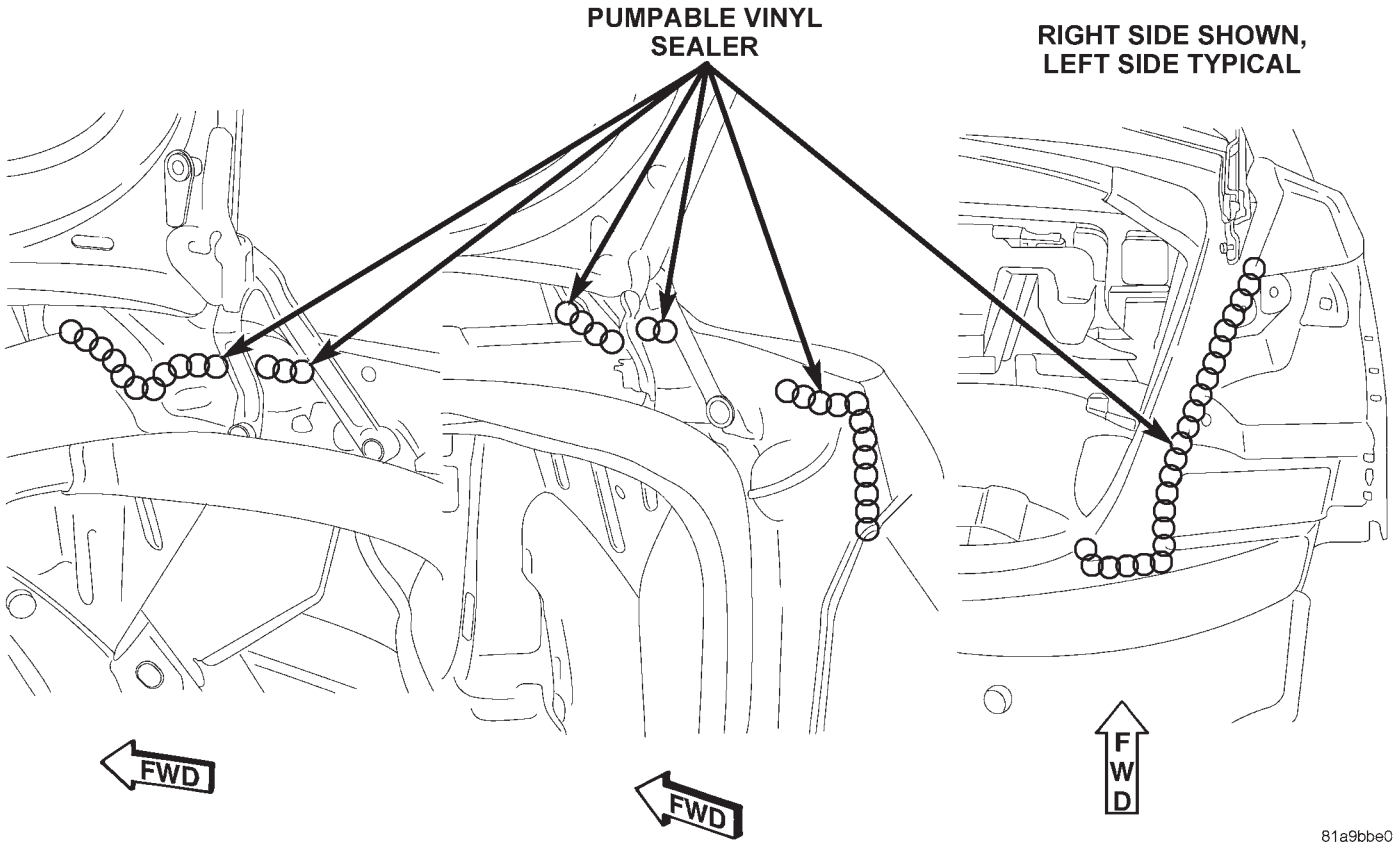

Figure 2. BODY SIDE APERTURE/DRAIN TROUGH OUTER PANEL

Back to Index

BODY SEALER LOCATIONS
CHRYSLER SEBRING

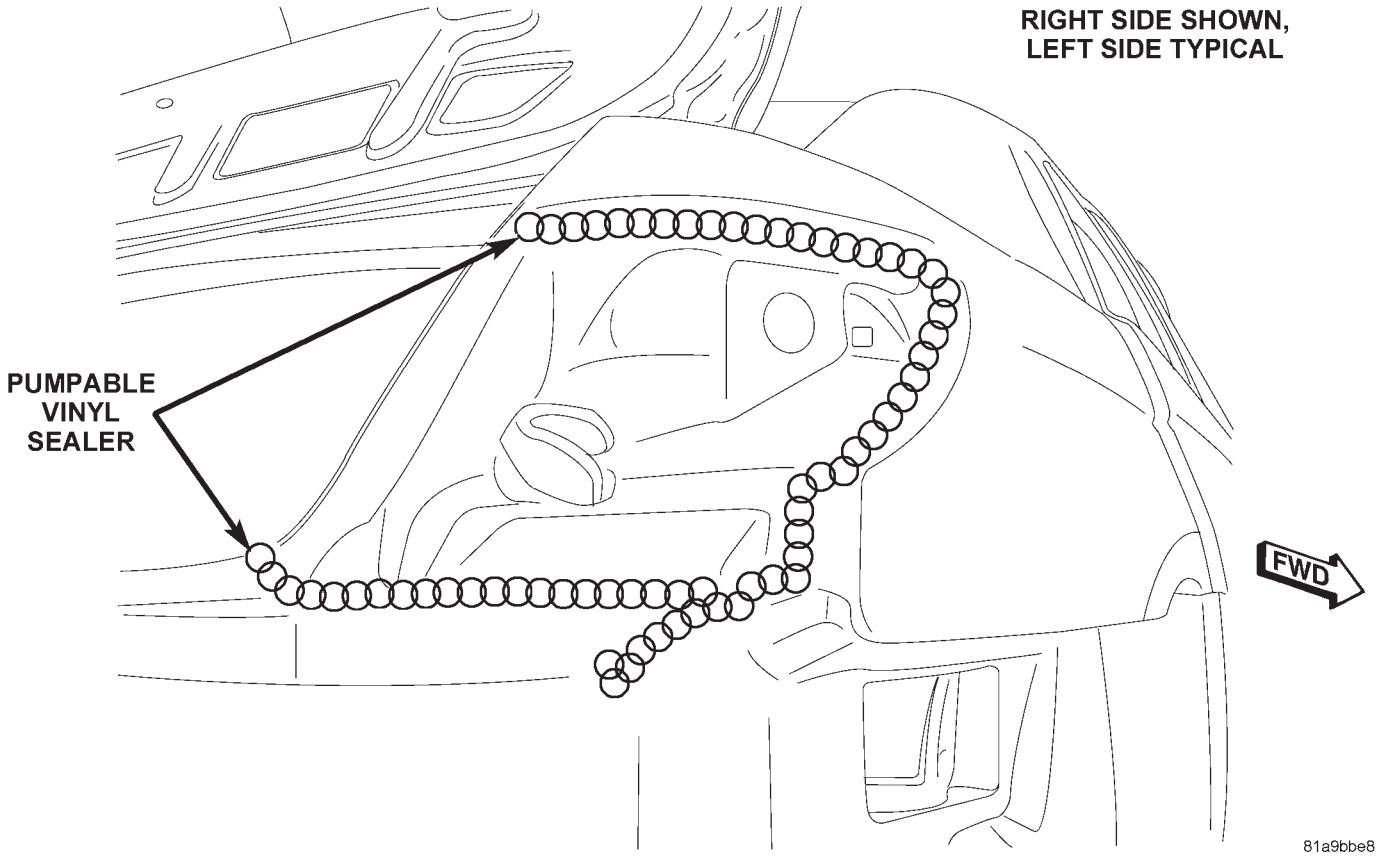

Figure 3. BODY SIDE APERTURE/TAIL LAMP PANEL

Back to Index

BODY SEALER LOCATIONS
DODGE AVENGER ONLY

DESCRIPTION	FIGURE
BODY SIDE APERTURE/QUARTER PANEL EXTENSION	1
BODY SIDE APERTURE/DRAIN TROUGH OUTER PANEL	2
BODY SIDE APERTURE/TAIL LAMP OPENING	3

Preferred Mopar Product:

- Paintable Seam Sealer – Part No. 04318026

Back to Index

BODY SEALER LOCATIONS
DODGE AVENGER ONLY

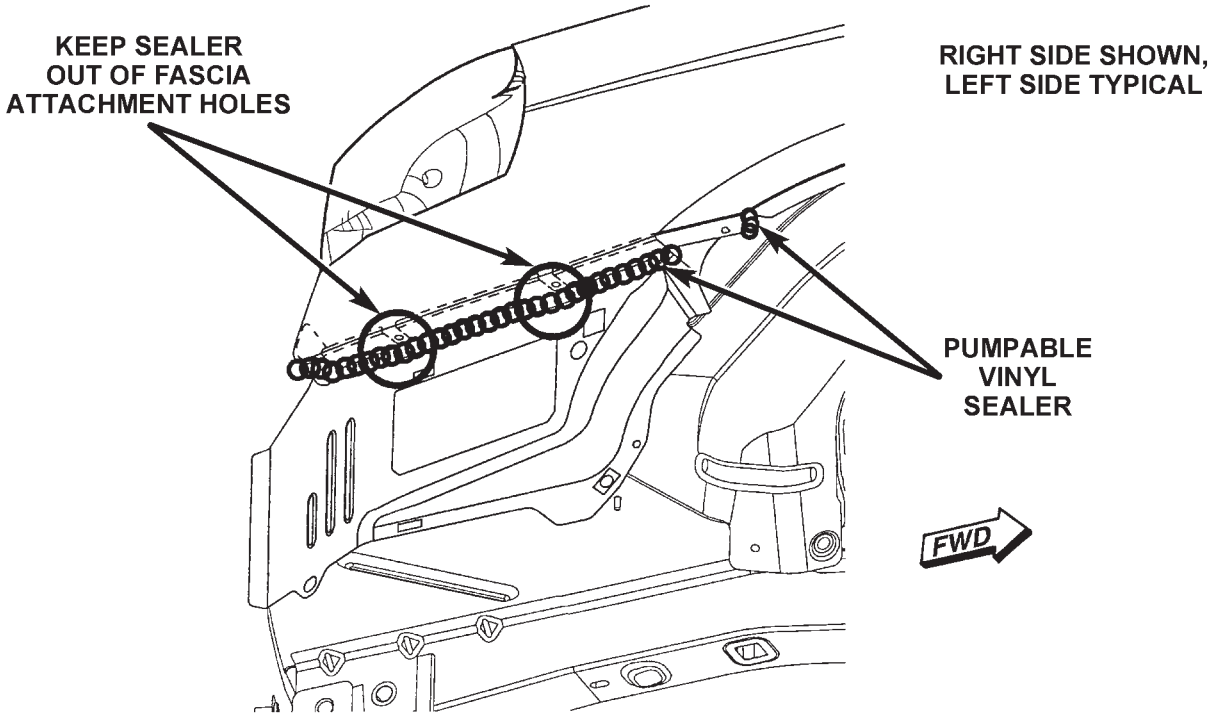

81b2a947

Figure 1. BODY SIDE APERTURE/QUARTER PANEL EXTENSION

Back to Index

BODY SEALER LOCATIONS
DODGE AVENGER ONLY

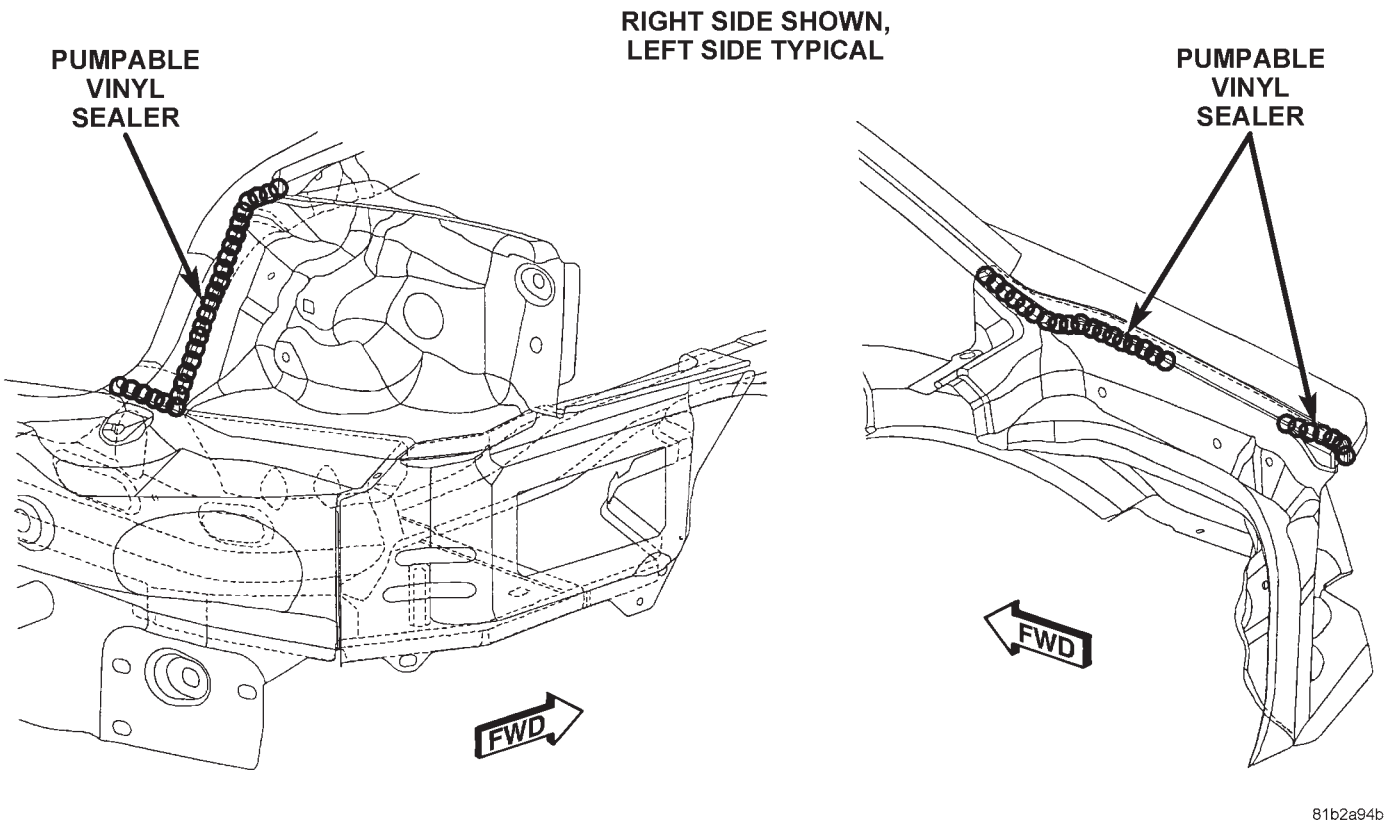

Figure 2. BODY SIDE APERTURE/DRAIN TROUGH OUTER PANEL

Back to Index

BODY SEALER LOCATIONS
DODGE AVENGER ONLY

RIGHT SIDE SHOWN,
LEFT SIDE TYPICAL

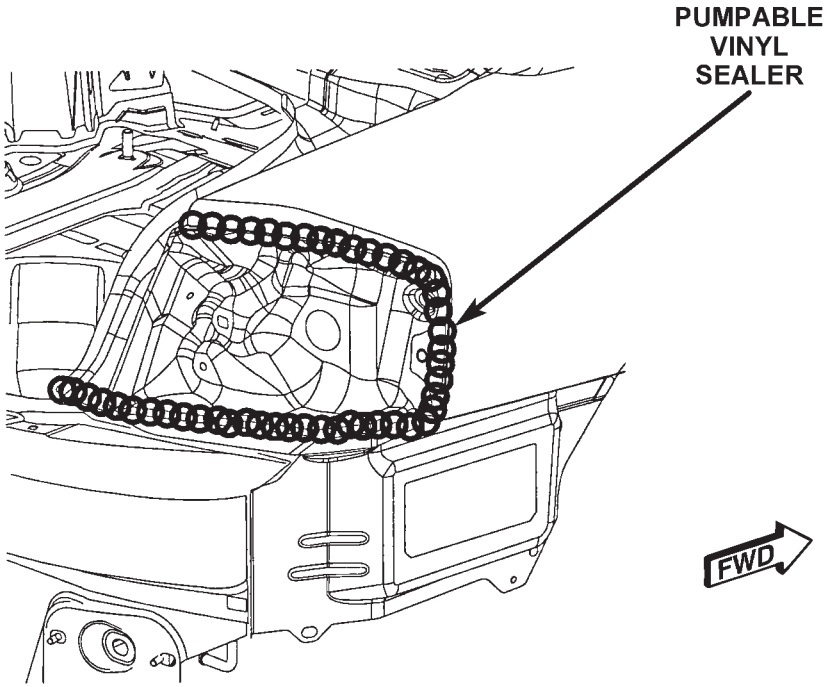

81b2a94f

Figure 3. BODY SIDE APERTURE/TAIL LAMP OPENING

Back to Index

CHRYSLER SEBRING BODY SIDE APERTURE SECTION

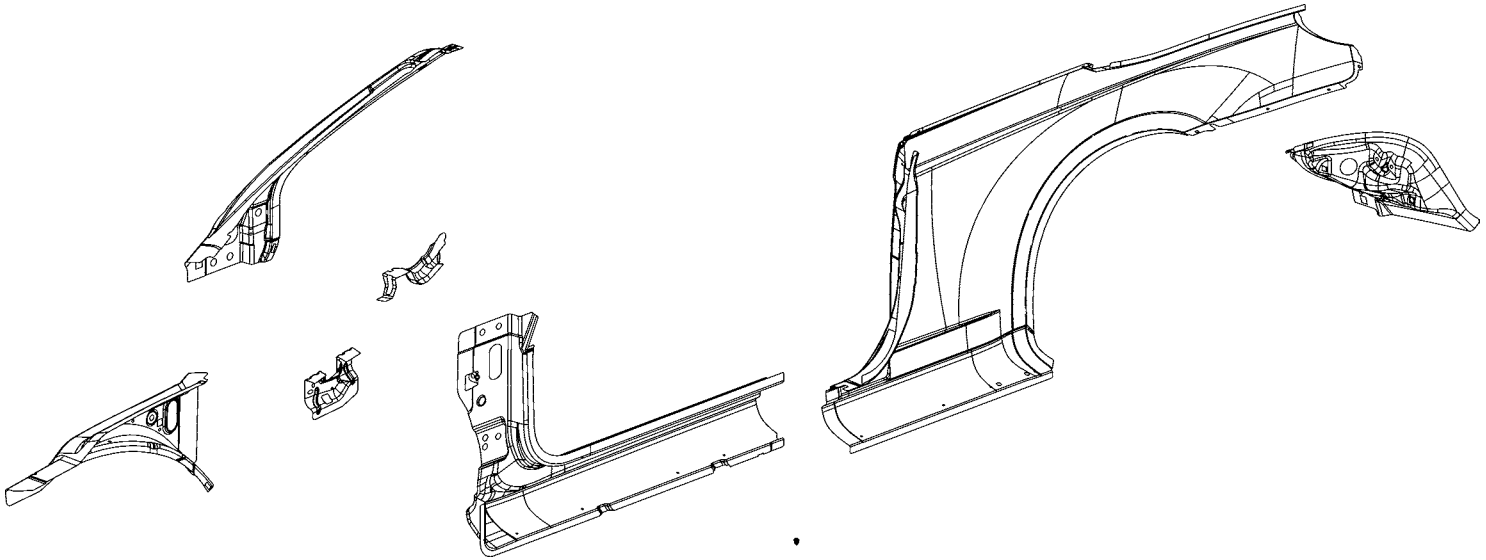

AA REINF – BODY SIDE SILL OTR RT –
AA REINF – BODY SIDE SILL OTR LT –
AB REINF – INR –
AB REINF – INR –
AC GUSSET – A-PILLAR INR RT –
AC GUSSET – A-PILLAR INR LT –
AD TAPPING PLATE – FRT DOOR HINGE LWR RT –
AD TAPPING PLATE – FRT DOOR HINGE LWR LT –
AE REINF – TUBE –
AE REINF – TUBE –
AF REINF – SILL RT –
AF REINF – SILL LT –
AG GUSSET – IMPACT BODY SIDE SILL –
AG GUSSET – IMPACT BODY SIDE SILL –
AH NUT/WELD.HEX – NIBS.NO.FIN.PILOT.PT – PLATE TO PANEL
AH NUT/WELD.HEX – NIBS.NO.FIN.PILOT.PT – PLATE TO PANEL
AJ FRAME – WINDSHIELD OPENING SIDE OTR RT –
AJ FRAME – WINDSHIELD OPENING SIDE OTR LT –
AK REINF – A-PILLAR RT –
AK REINF – A-PILLAR LT-
AL REINF – RR OTR INR BELT RT –
AL REINF – RR OTR INR BELT LT –
AM PANEL – QTR INR RT –
AM PANEL – QTR INR LT –
AN RETAINER – ANCHOR PLATE –
AN RETAINER –ANCHOR PLATE –
AP NUT/WELD.SQ – NIBS.NO.FIN.SQUARE – ANCHOR PLATE TO PANEL
AP NUT/WELD.SQ – NIBS.NO.FIN.SQUARE – ANCHOR PLATE TO PANEL
AR NUT/WELD.SQ – NIBS.NO.FIN.SQUARE – QTR INR PNL TO BRKT ASSY
AR NUT/WELD.SQ – NIBS.NO.FIN.SQUARE – QTR INR TO MUCKET
AR NUT/WELD.SQ – NIBS.NO.FIN.SQUARE – QTR INR PNL TO BRKT ASSY
AS NUT/WELD.SQ – NIBS.NO.FIN.SQUARE – QTR INR BELT TO BULKHEAD REIN
AS NUT/WELD.SQ – NIBS.NO.FIN.SQUARE – QTR INR BELT TO BULKHEAD REIN
AT PANEL – TAIL LAMP MOUNTING RT –
AU BRACKET – BUMPER –
AV NUT/WELD.HEX – THICK – BRKT ASSY TO BRKT BUMPER OVERSLAM
AW REINF – QTR OTR PANEL FRT RT –
AW REINF – QTR OTR PANEL FRT LT –
AX REINF – B-PILLAR INR RT –
AX REINF – B-PILLAR INR LT –
AY FILLER – DRAIN TROUGH –
AY FILLER – DRAIN TROUGH –

Back to Index

PARTS IDENTIFICATION LEGEND, OVERVIEW 13

AA REINF – BODY SIDE SILL OTR RT –
AA REINF – BODY SIDE SILL OTR LT –
AB REINF – INR –
AB REINF – INR –
AC GUSSET – A-PILLAR INR RT –
AC GUSSET – A-PILLAR INR LT –
AD TAPPING PLATE – FRT DOOR HINGE LWR RT –
AD TAPPING PLATE – FRT DOOR HINGE LWR LT –
AE REINF – TUBE –
AE REINF – TUBE –
AF REINF – SILL RT –
AF REINF – SILL LT –
AG GUSSET – IMPACT BODY SIDE SILL –
AG GUSSET – IMPACT BODY SIDE SILL –
AH NUT/WELD.HEX – NIBS.NO.FIN.PILOT.PT – PLATE TO PANEL
AH NUT/WELD.HEX – NIBS.NO.FIN.PILOT.PT – PLATE TO PANEL
AJ FRAME – WINDSHIELD OPENING SIDE OTR RT –
AJ FRAME – WINDSHIELD OPENING SIDE OTR LT –
AK REINF – A-PILLAR RT –
AK REINF – A-PILLAR LT-
AL REINF – RR OTR INR BELT RT –
AL REINF – RR OTR INR BELT LT –
AM PANEL – QTR INR RT –
AM PANEL – QTR INR LT –
AN RETAINER – ANCHOR PLATE –
AN RETAINER –ANCHOR PLATE –
AP NUT/WELD.SQ – NIBS.NO.FIN.SQUARE – ANCHOR PLATE TO PANEL
AP NUT/WELD.SQ – NIBS.NO.FIN.SQUARE – ANCHOR PLATE TO PANEL
AR NUT/WELD.SQ – NIBS.NO.FIN.SQUARE – QTR INR PNL TO BRKT ASSY
AR NUT/WELD.SQ – NIBS.NO.FIN.SQUARE – QTR INR TO MUCKET
AR NUT/WELD.SQ – NIBS.NO.FIN.SQUARE – QTR INR PNL TO BRKT ASSY
AS NUT/WELD.SQ – NIBS.NO.FIN.SQUARE – QTR INR BELT TO BULKHEAD REIN
AS NUT/WELD.SQ – NIBS.NO.FIN.SQUARE – QTR INR BELT TO BULKHEAD REIN
AT PANEL – TAIL LAMP MOUNTING RT –
AU BRACKET – BUMPER –
AV NUT/WELD.HEX – THICK – BRKT ASSY TO BRKT BUMPER OVERSLAM
AW REINF – QTR OTR PANEL FRT RT –
AW REINF – QTR OTR PANEL FRT LT –
AX REINF – B-PILLAR INR RT –
AX REINF – B-PILLAR INR LT –
AY FILLER – DRAIN TROUGH –
AY FILLER – DRAIN TROUGH –

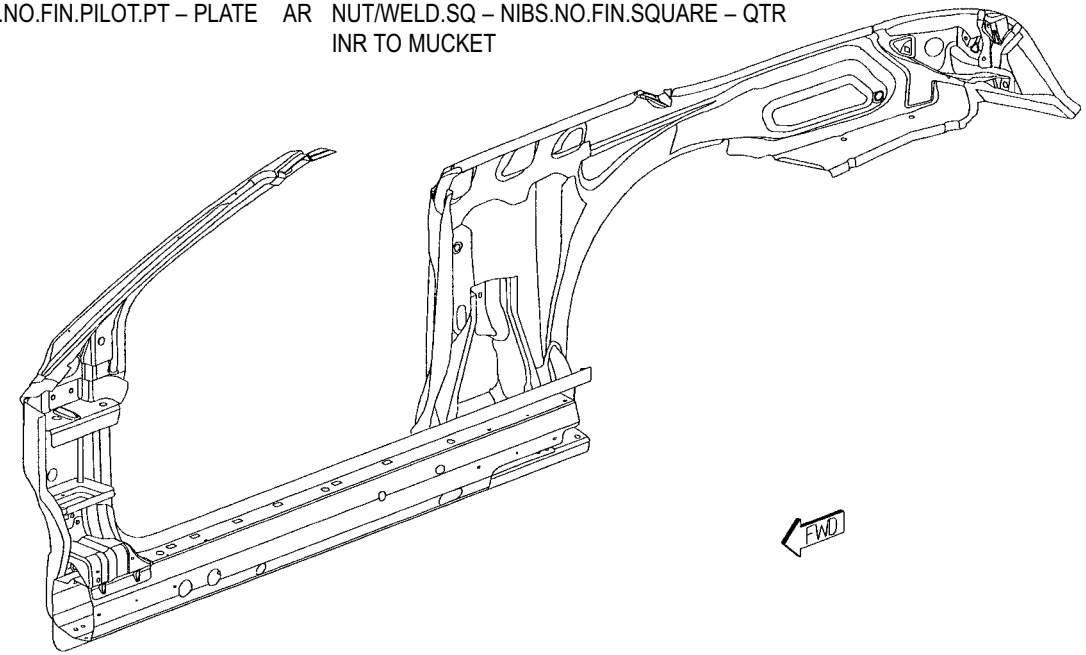

Back to Index

WELD LAYOUT LOCATION GUIDE

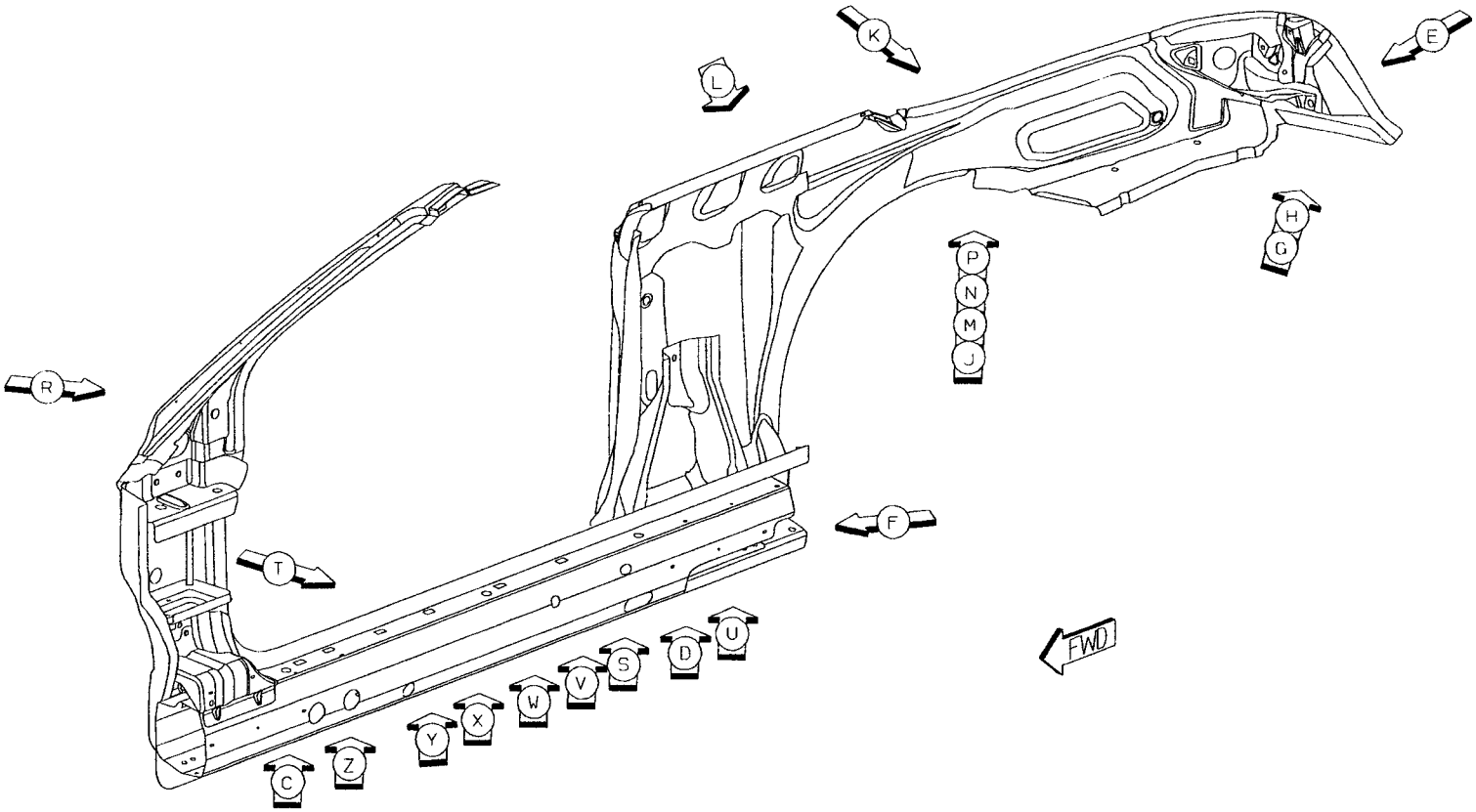

Back to Index

01 AB TO AA 3 S/WELDS (ORD)
02 AC TO AA 5 S/WELDS (ORD)
03 AD TO AA 7 S/WELDS (ORD)

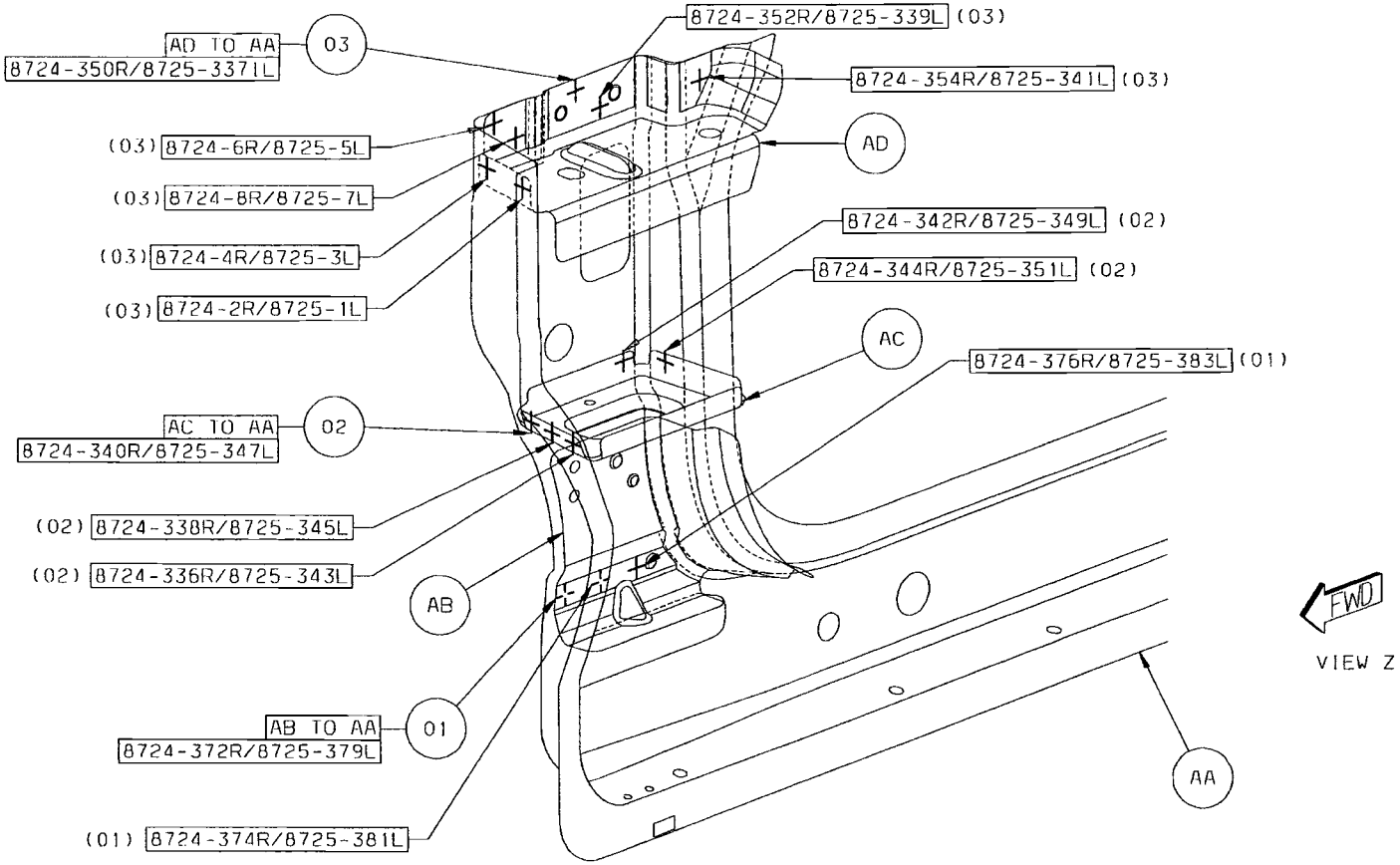

Back to Index

04 AB TO AE TO AA 3 S/WELDS (ORD)

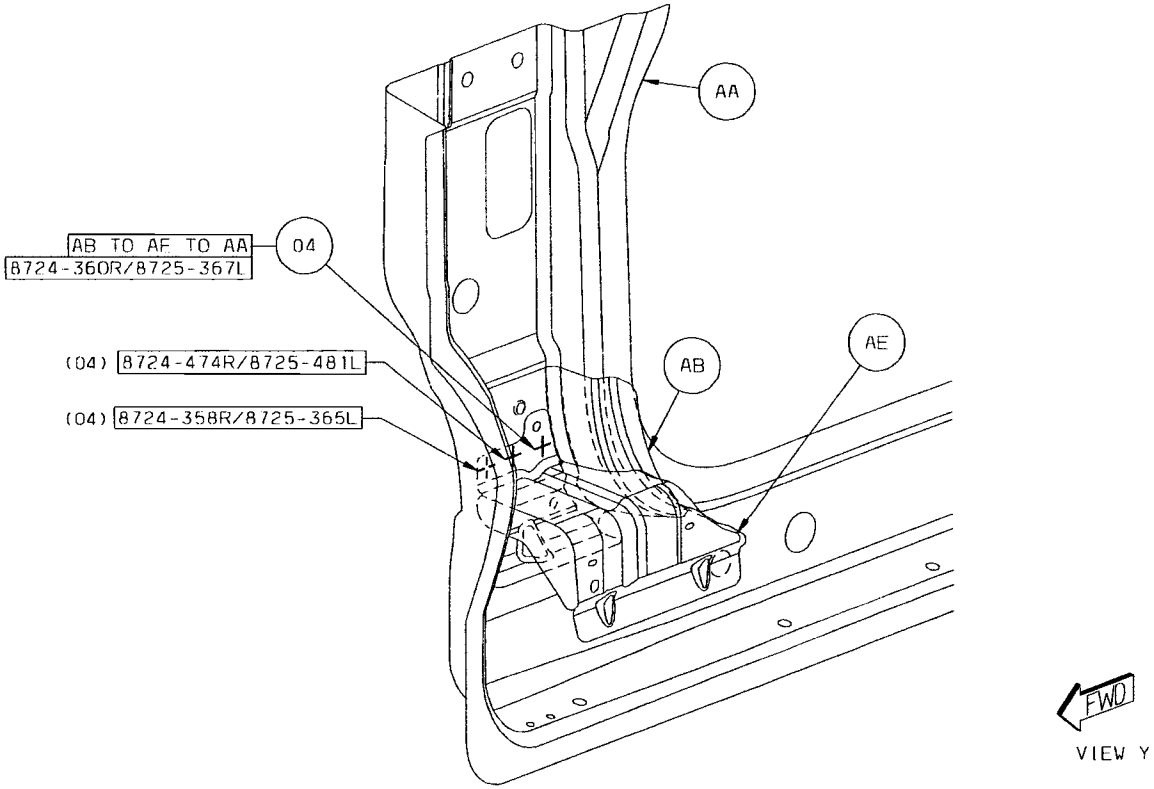

Back to Index

05 AE TO AA 5 S/WELDS (ORD)

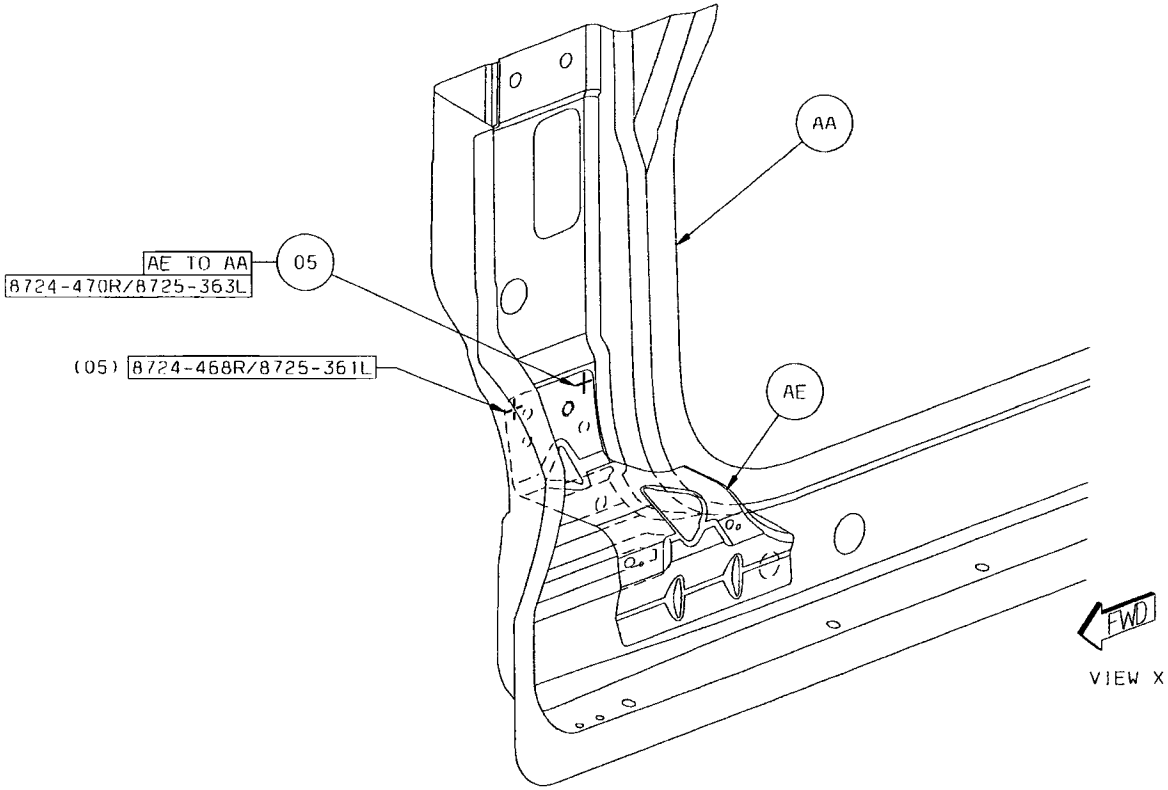

Back to Index

06 AB TO AF 4 S/WELDS (ORD)

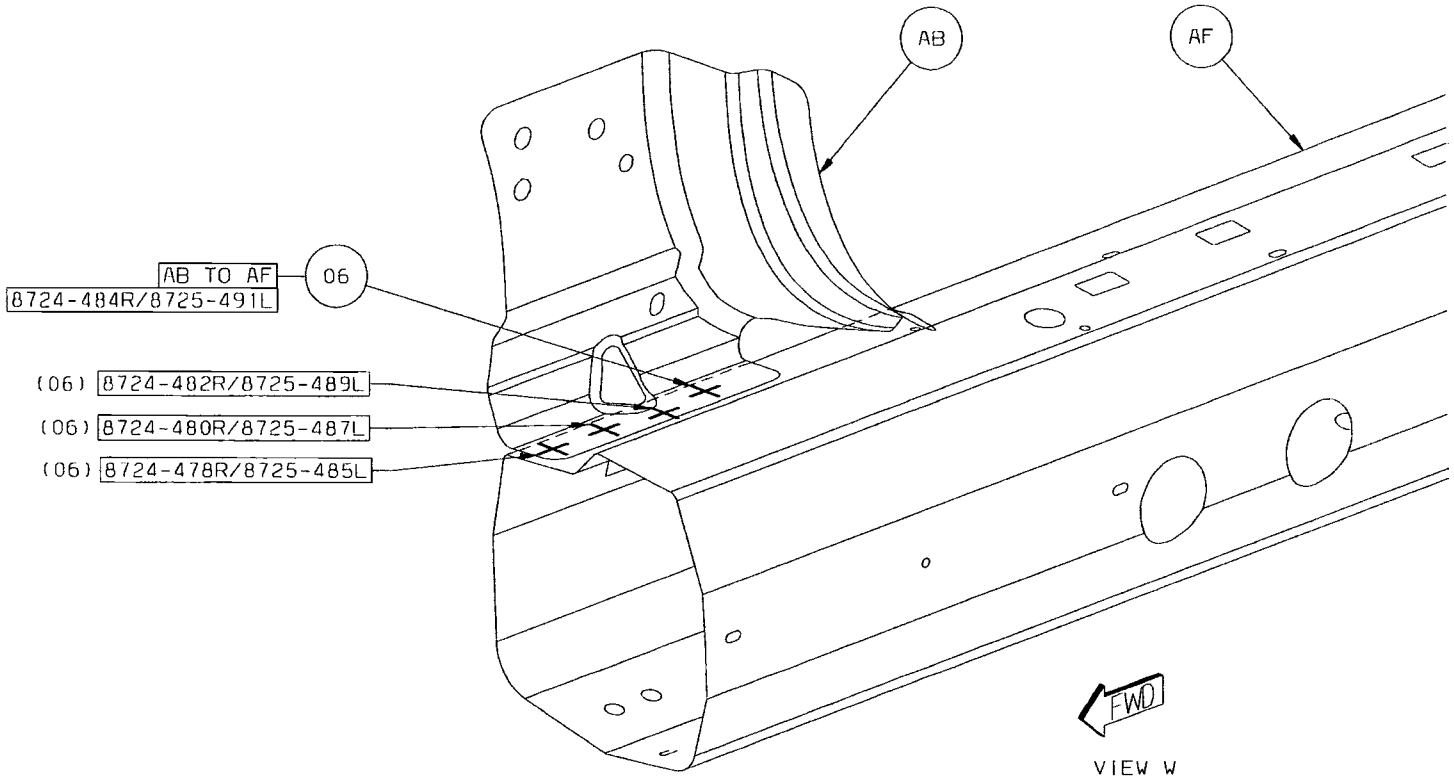

Back to Index

07 AE TO AF 5 S/WELDS (ORD)

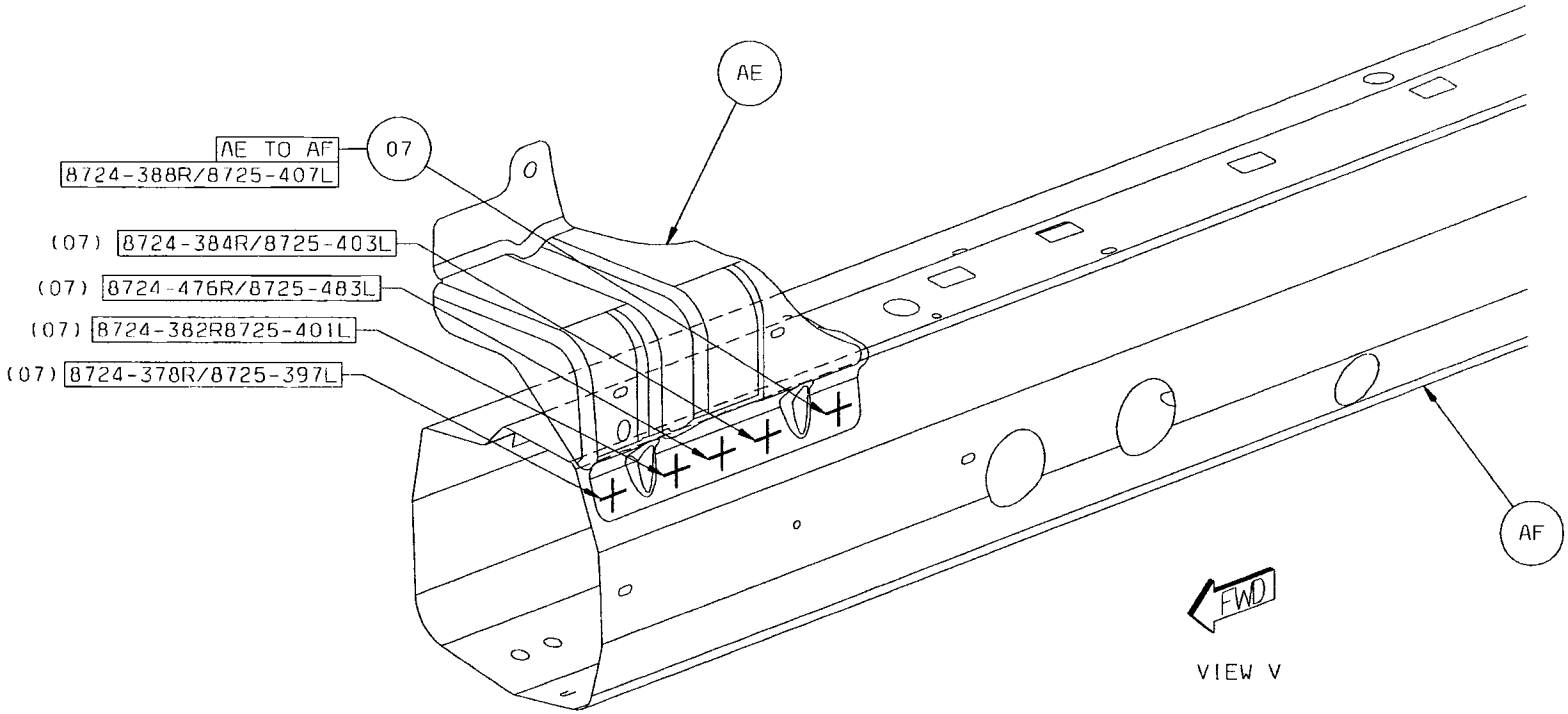

Back to Index

08 AF TO AA 9 S/WELDS (ORD)

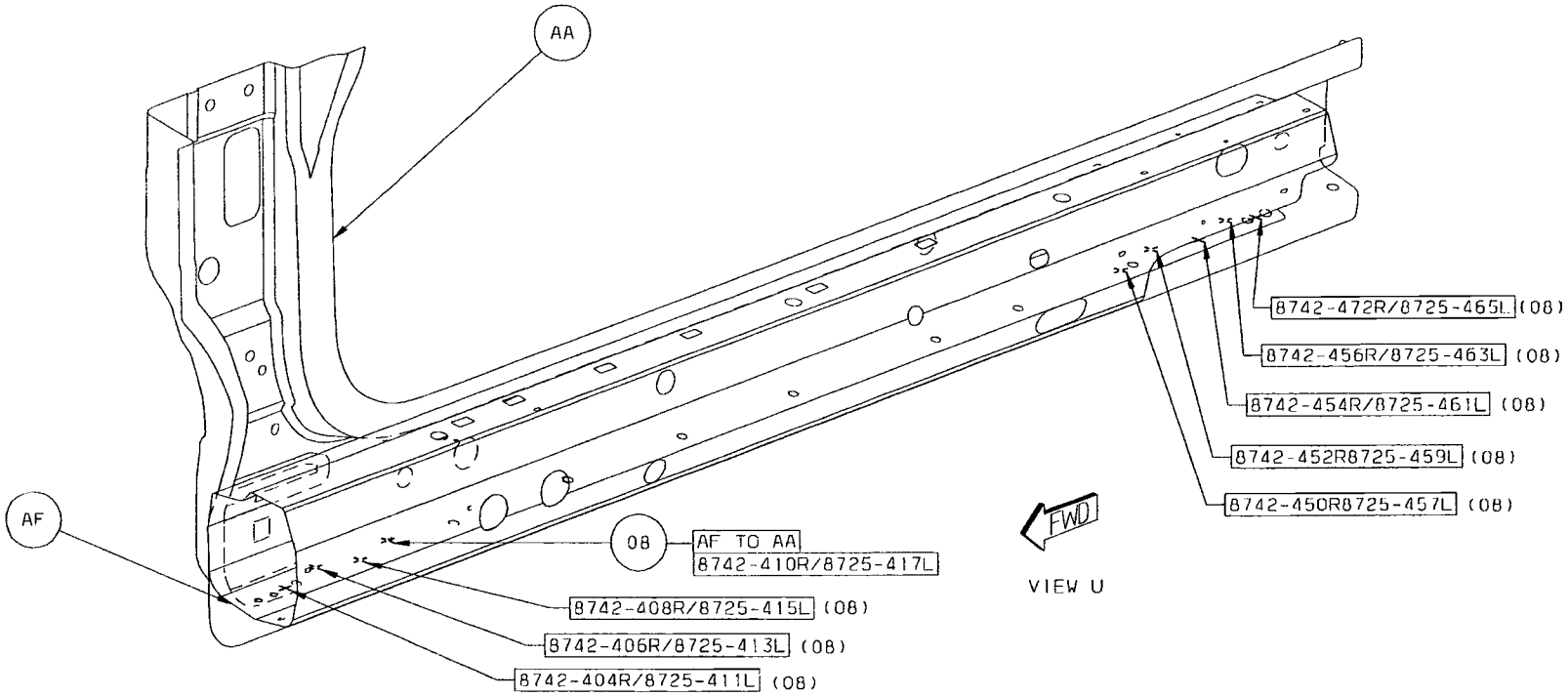

Back to Index

09 AG TO AF TO AA 3 S/WELDS (ORD)
10 AG TO AA 10 S/WELDS (ORD)

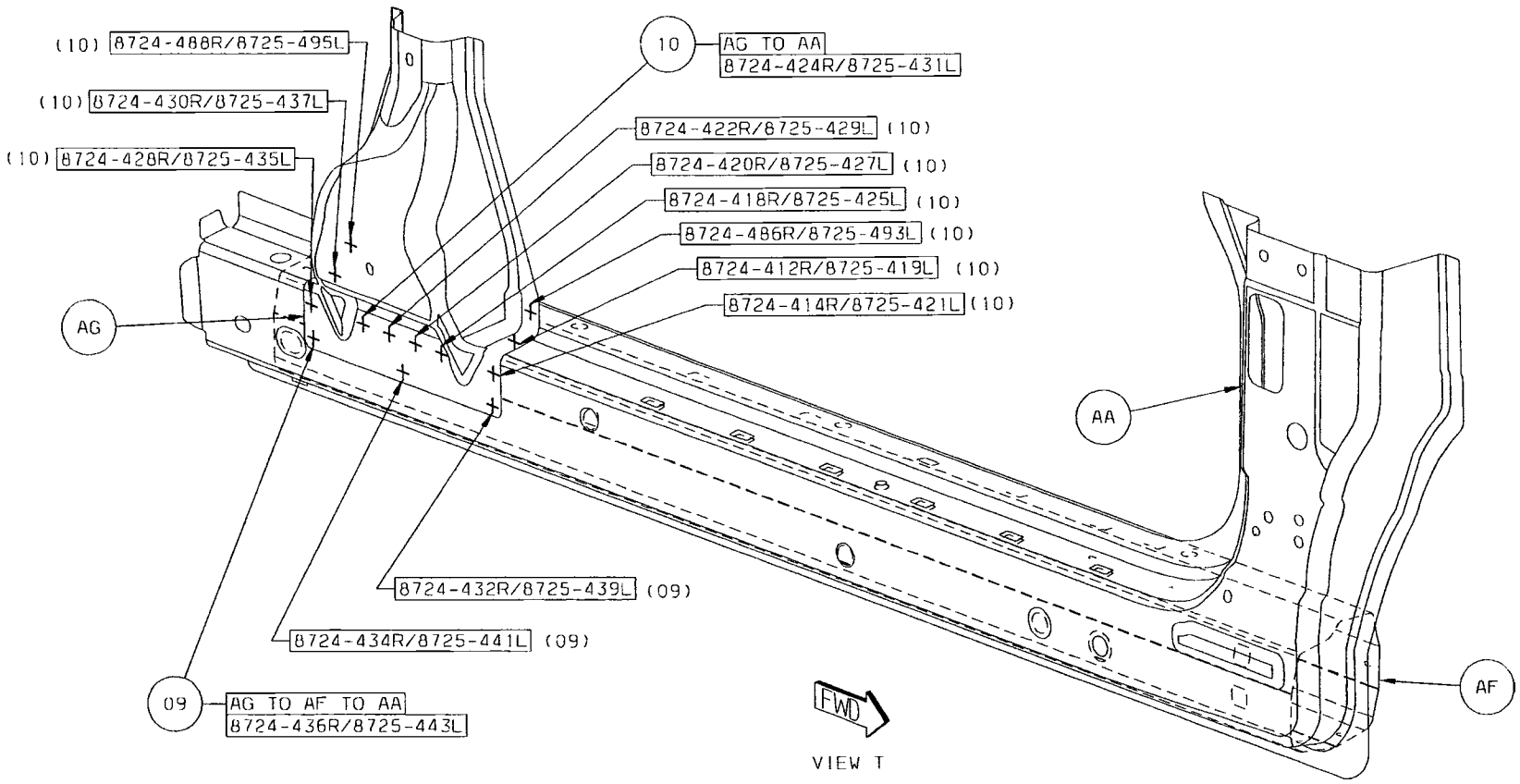

Back to Index

11 AH TO AB 3 PROJ WELDS (ORD)
12 AH TO AD 2 PROJ WELDS (ORD)

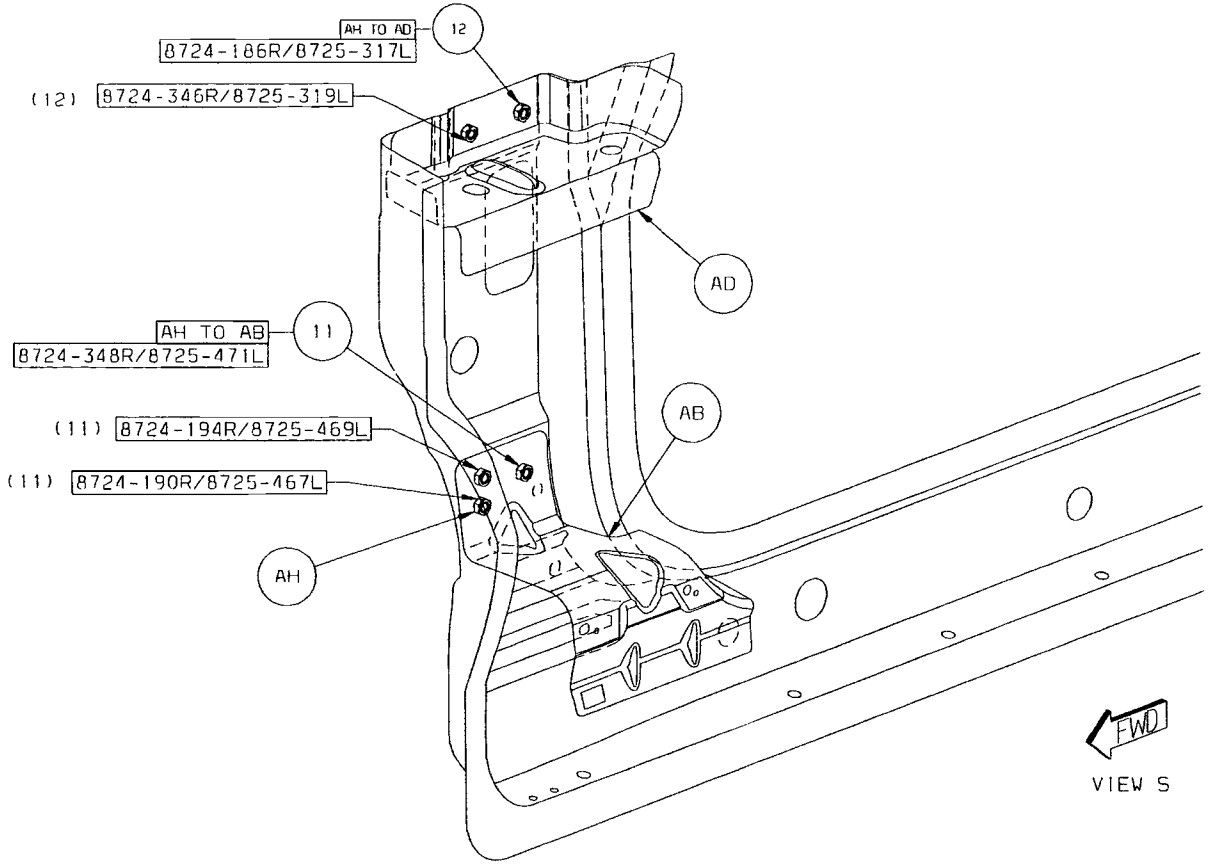

Back to Index

13 AJ TO AK 30 S/WELDS (ORD)

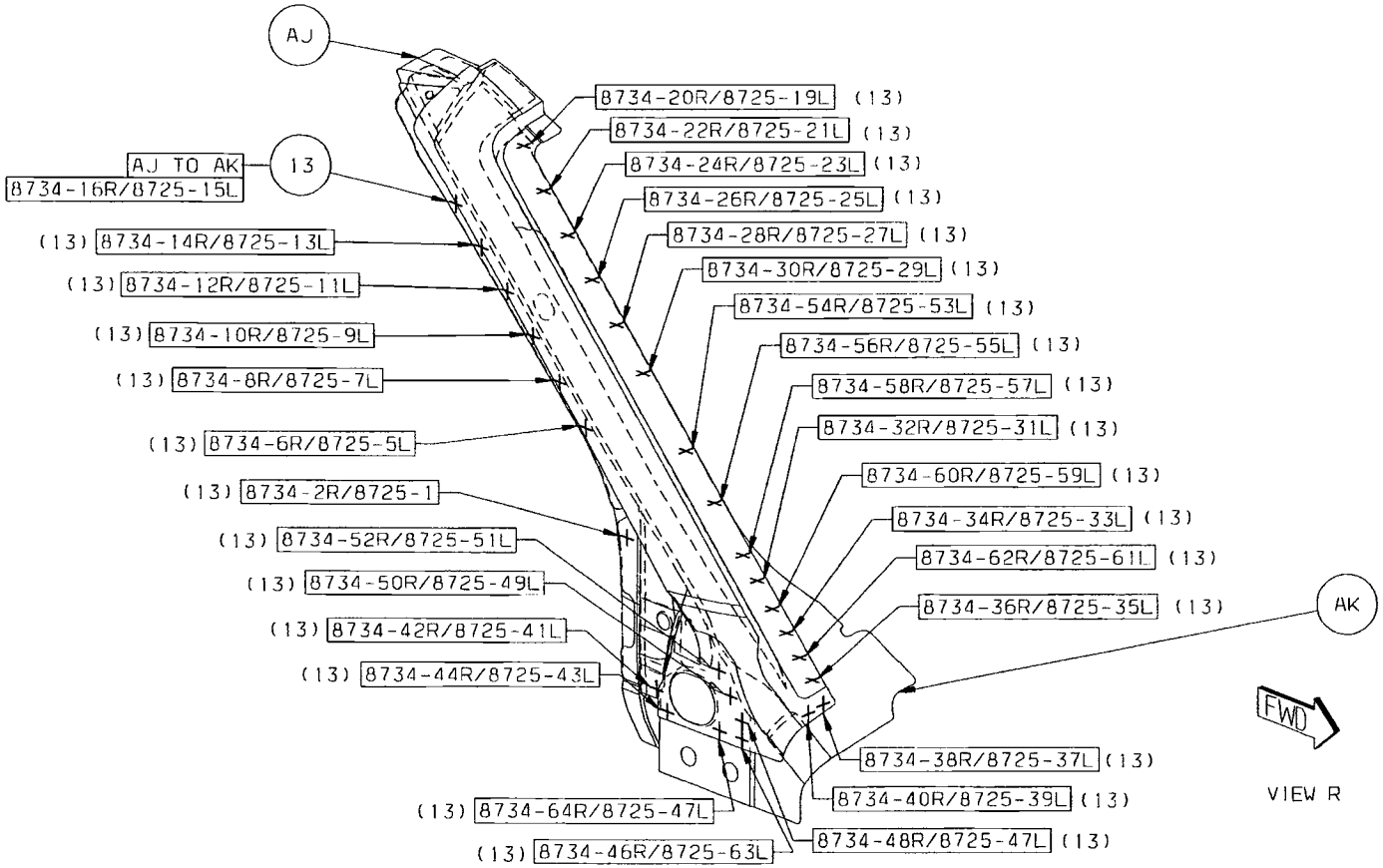

Back to Index

14 AL TO AM 22 S/WELD (ORD)

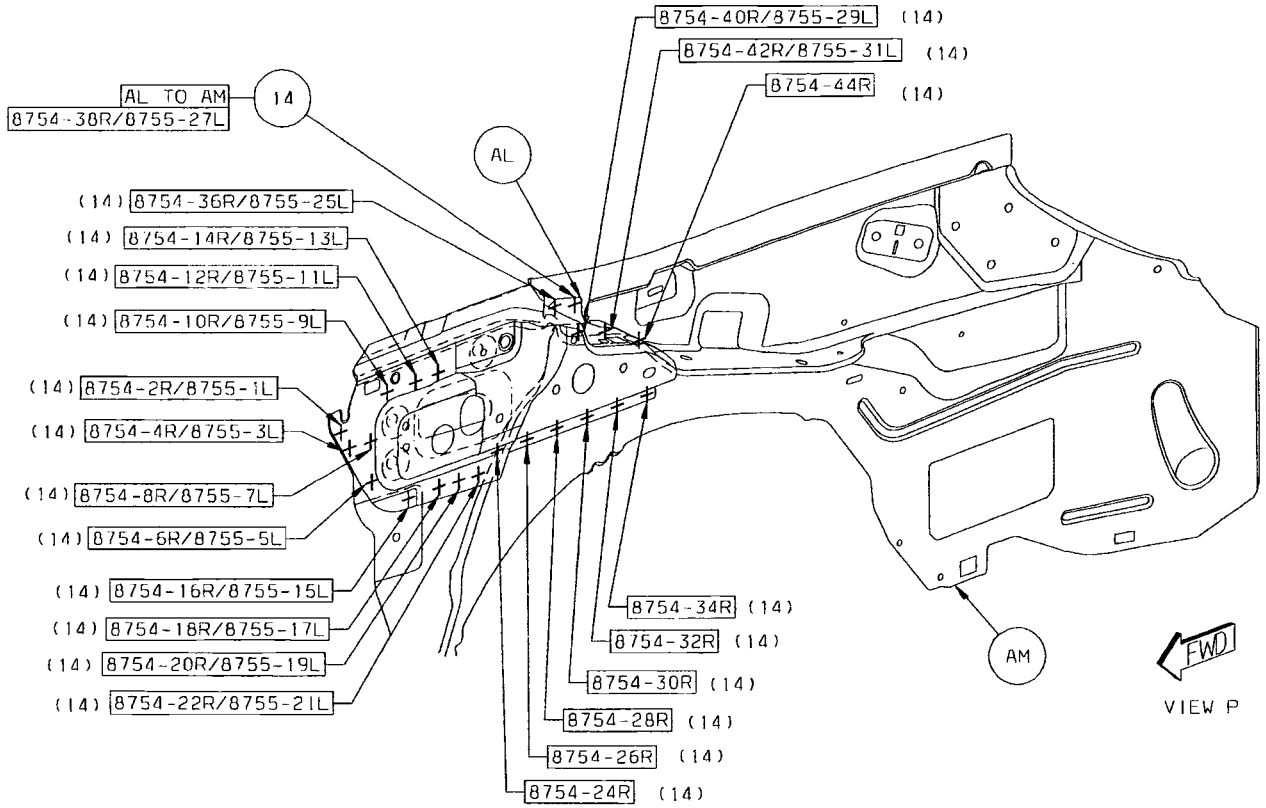

Back to Index

15 AL TO AM 11 S/WELDS (ORD)

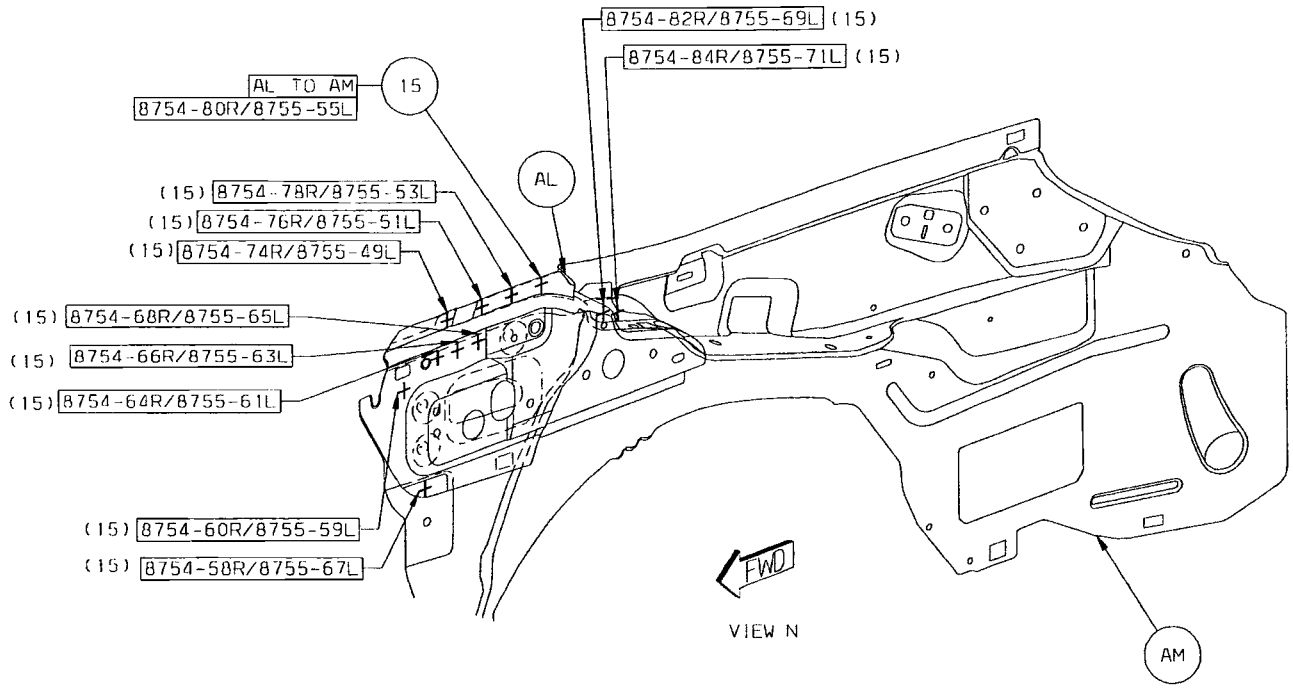

Back to Index

16 AN TO AM 7 S/WELDS (ORD)

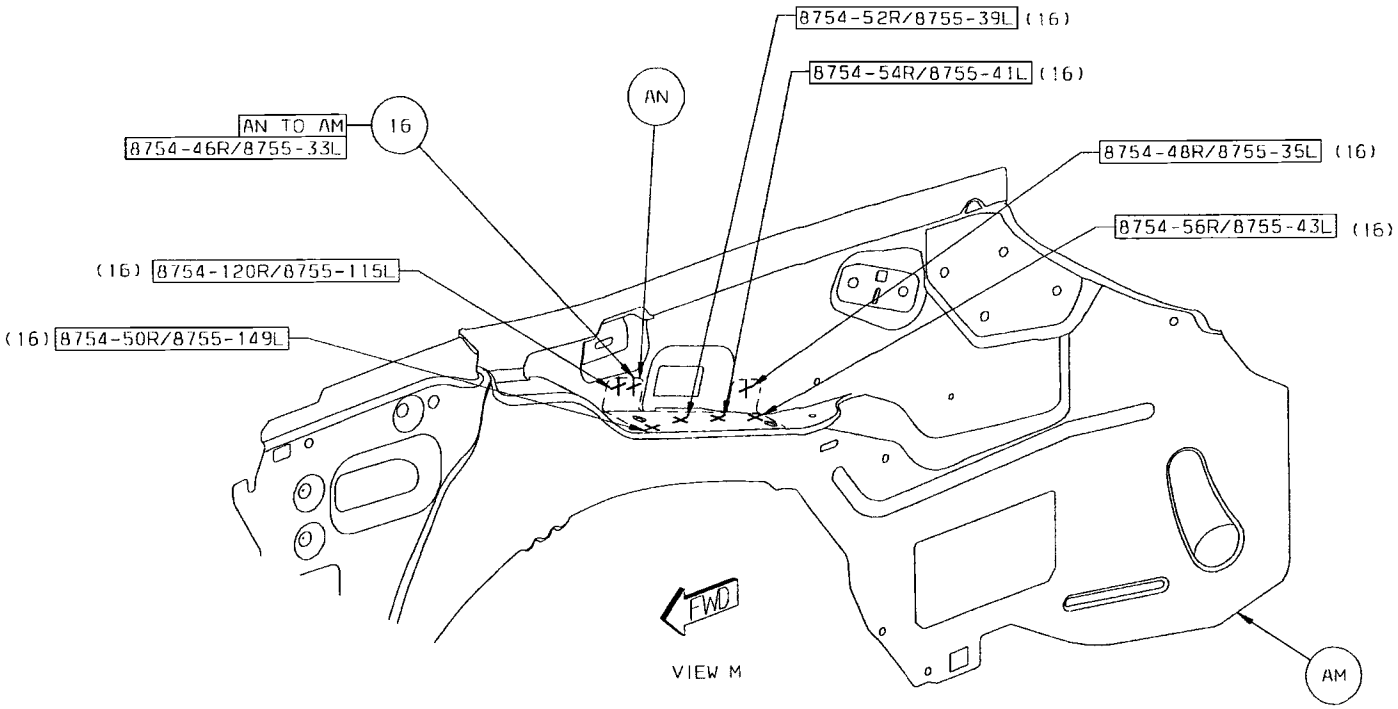

Back to Index

17 AP TO AM 12 PROJ WELDS (ORD)
18 AR TO AM 1 PROJ WELD (ORD)

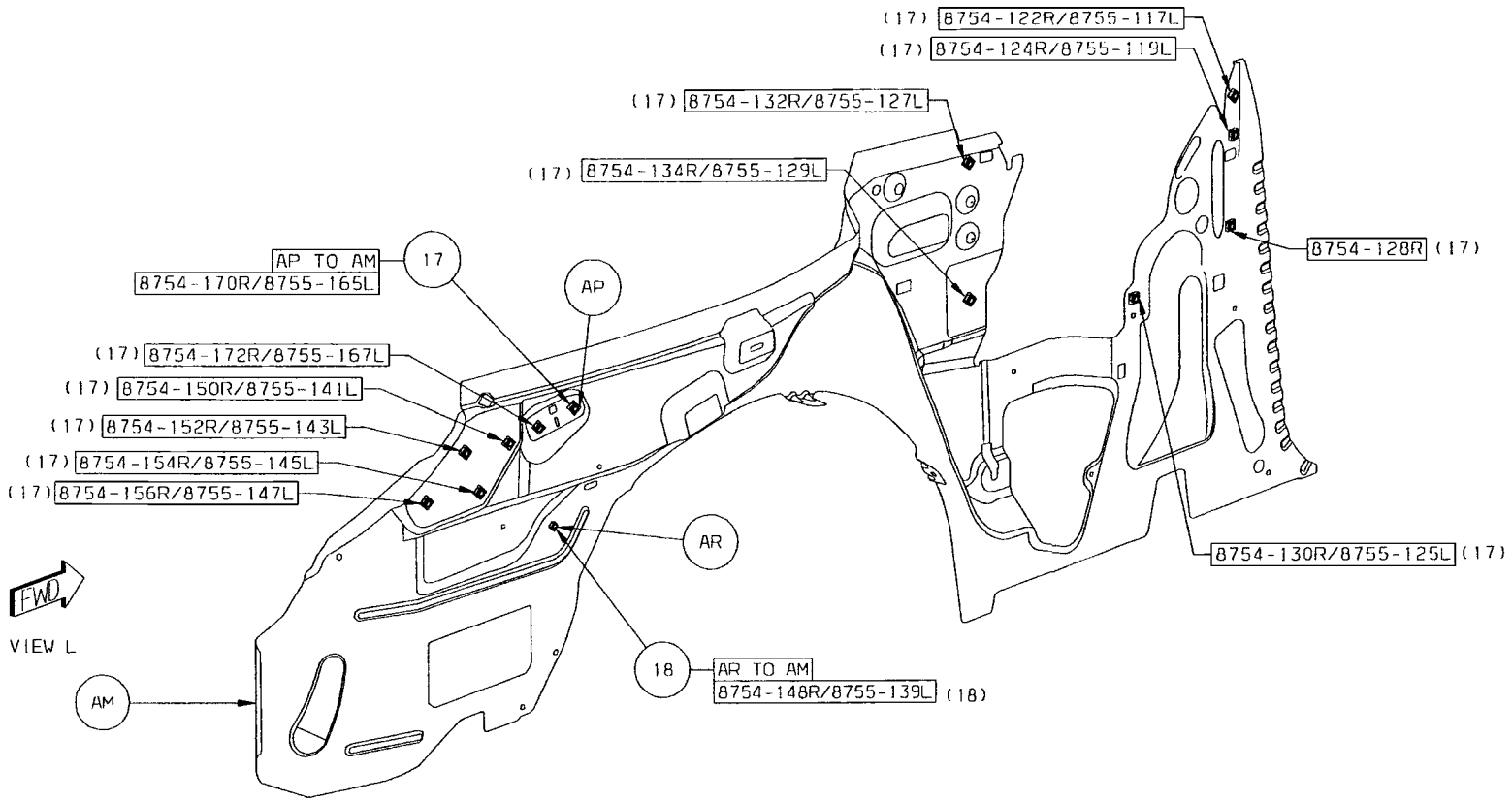

Back to Index

19 AS TO AL 3 PROJ WELDS (ORD)
20 AR TO AL 2 PROJ WELDS (ORD)
21 AP TO AL 1 PROJ WELD (ORD)

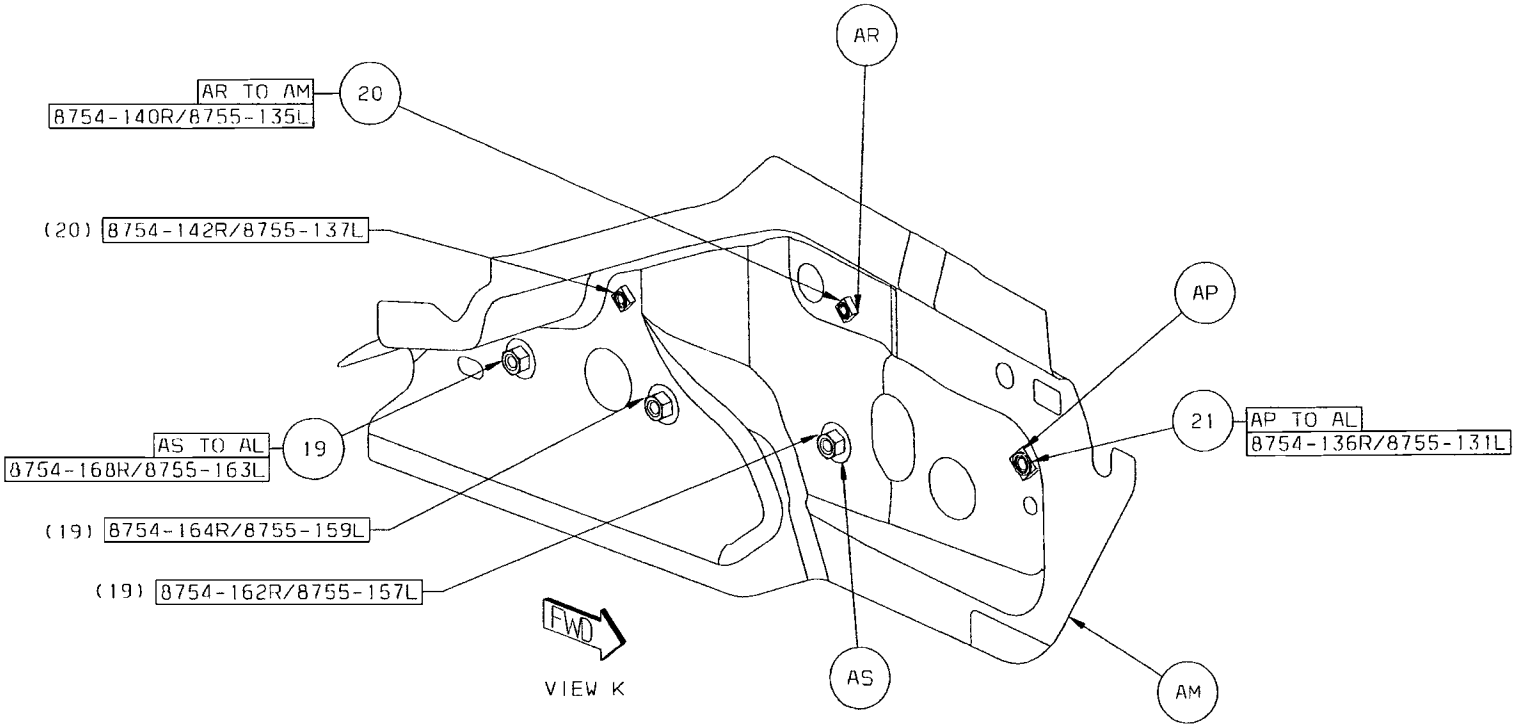

Back to Index

22 AU TO AN 2 PROJ WELDS (ORD)

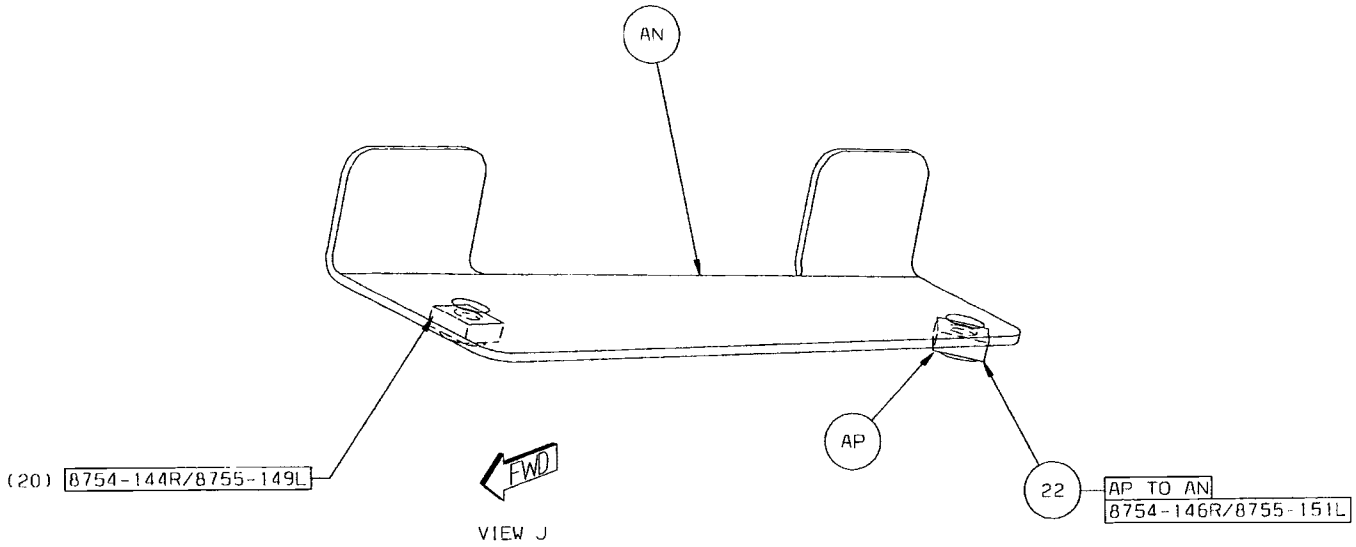

Back to Index

23 AU TO AT 4 S/WELDS (ORD)

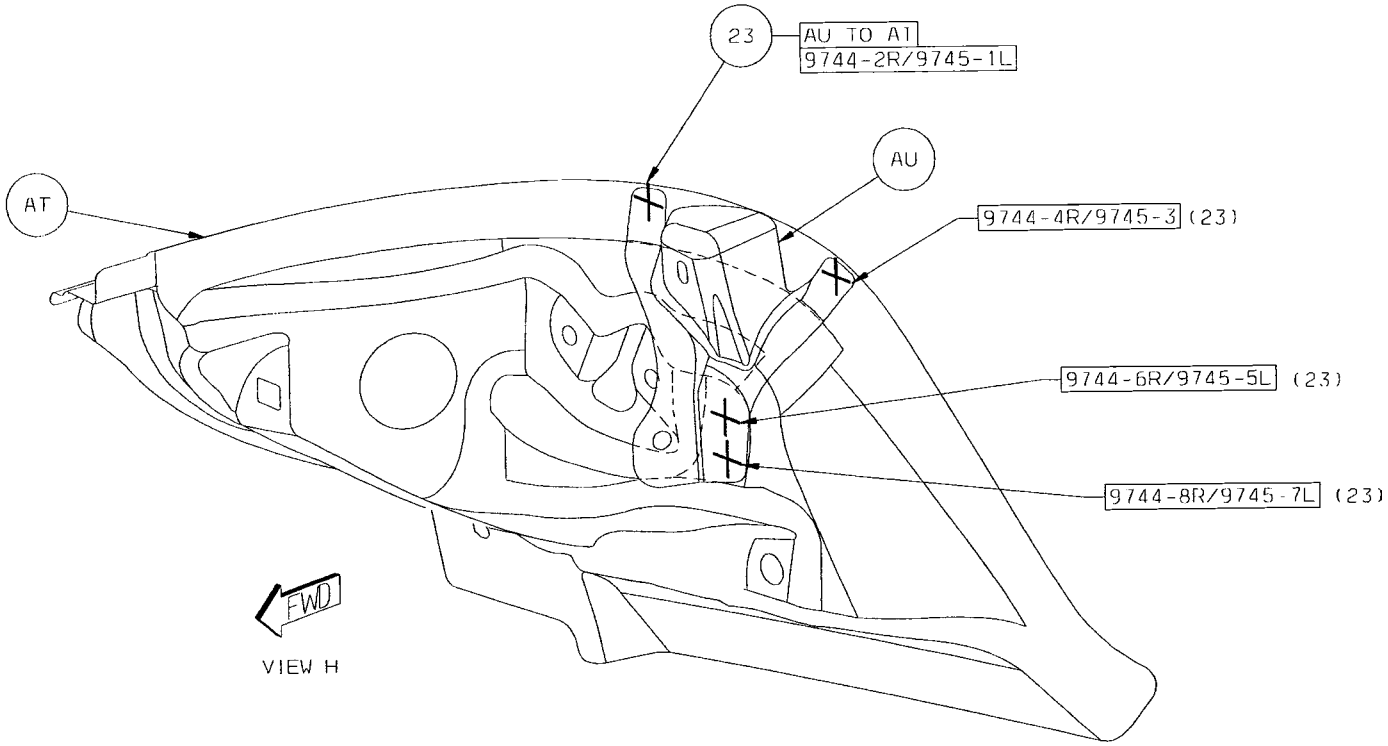

Back to Index

24 AV TO AU 1 PROJ WELD (ORD)

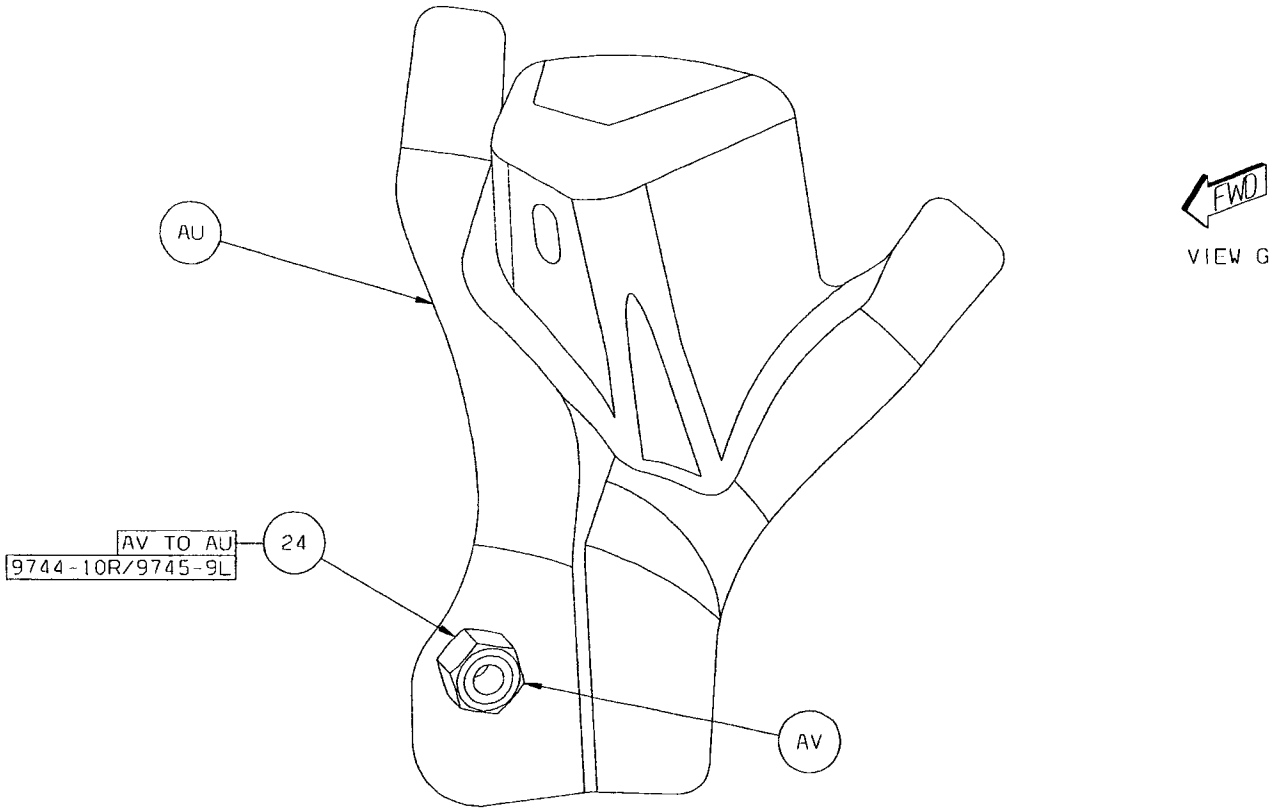

Back to Index

25 AX TO AW 12 S/WELDS (ORD)
26 AY TO AW 3 S/WELDS (ORD)

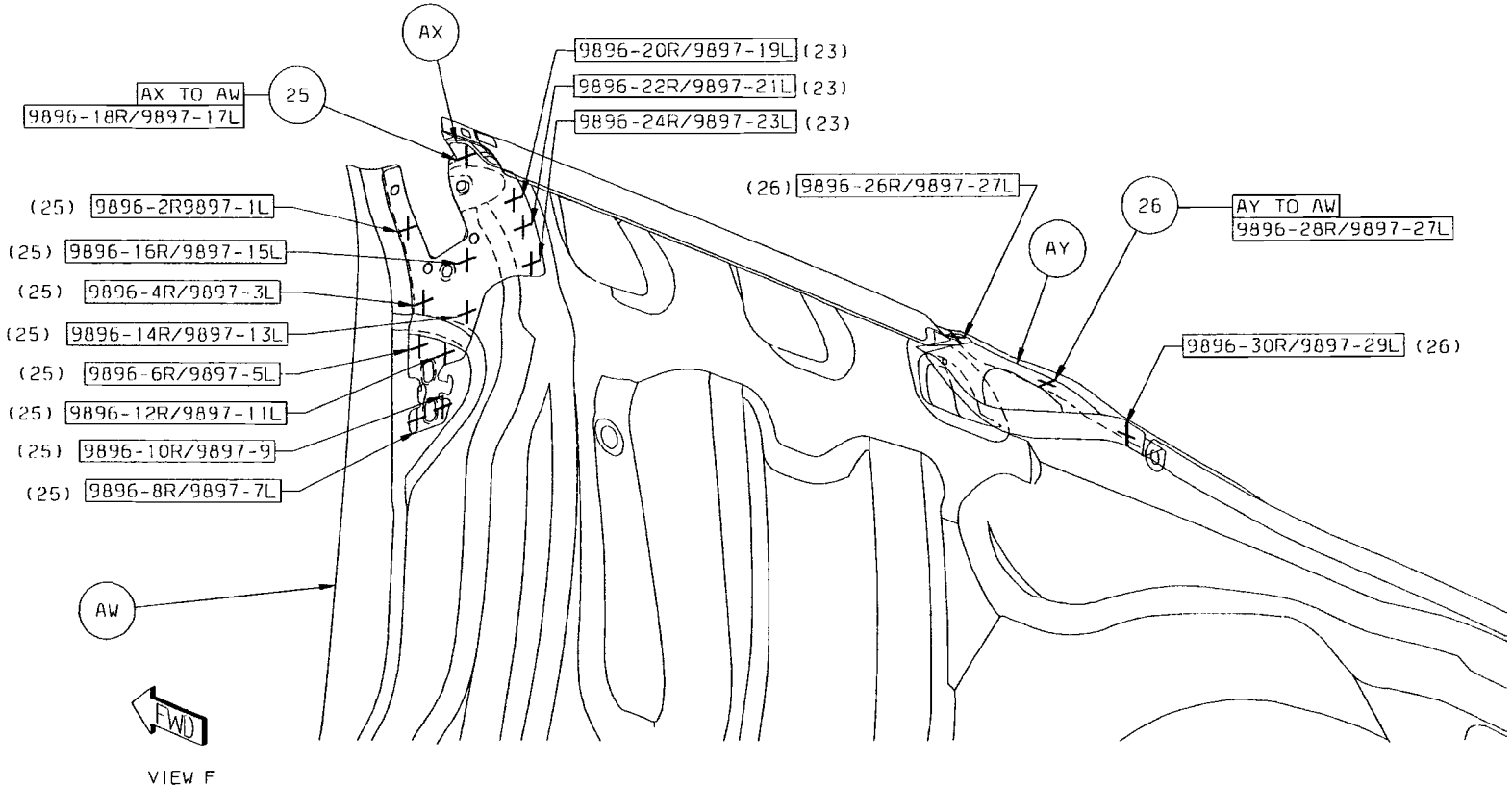

Back to Index

27 AF TO AA 2 STRUC ADH

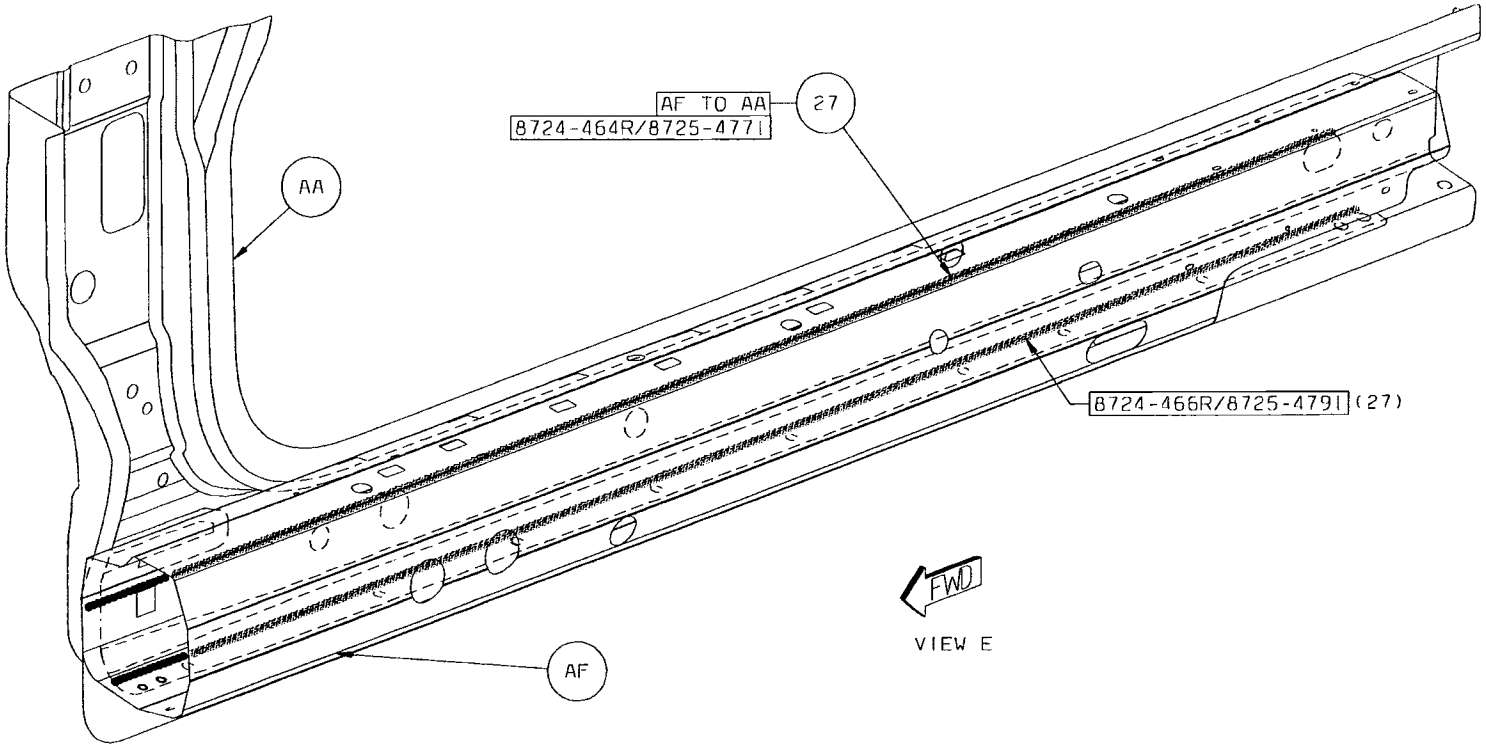

Back to Index

28 AB TO AA 1 STRUC ADH

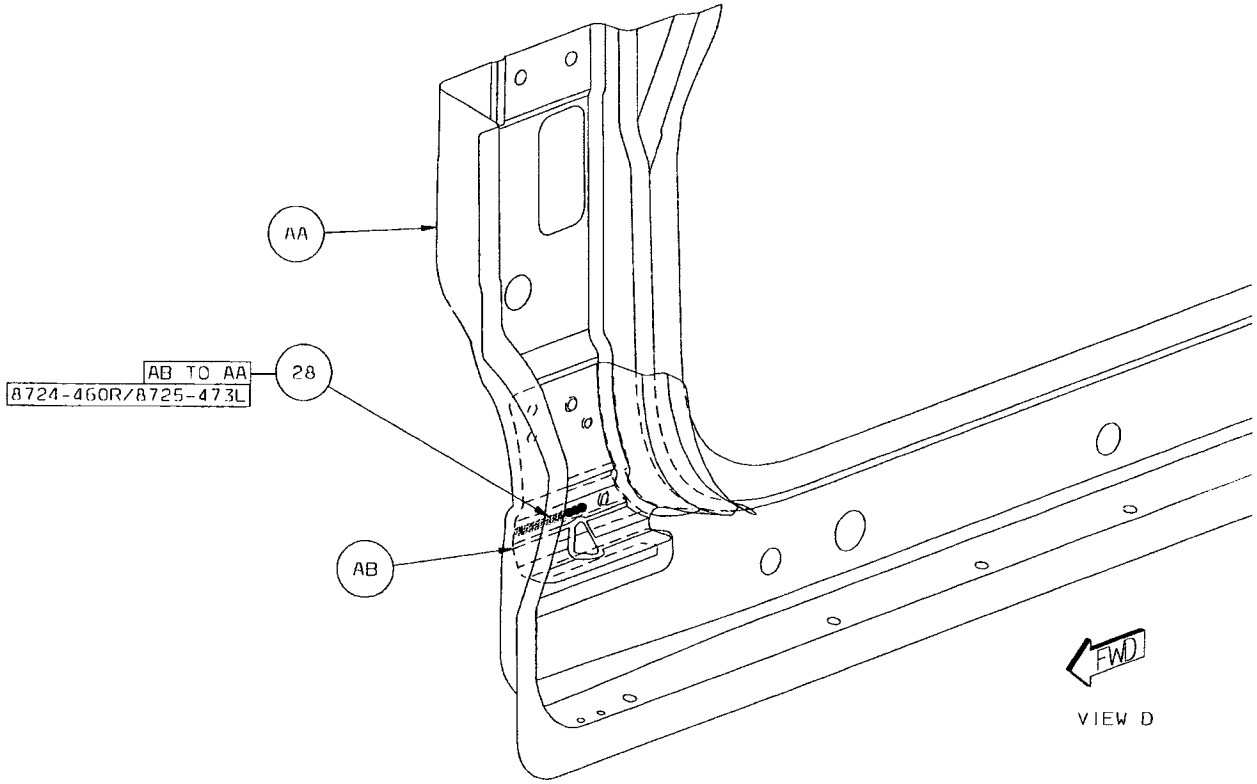

Back to Index

29 AE TO AB 1 STRUC ADH

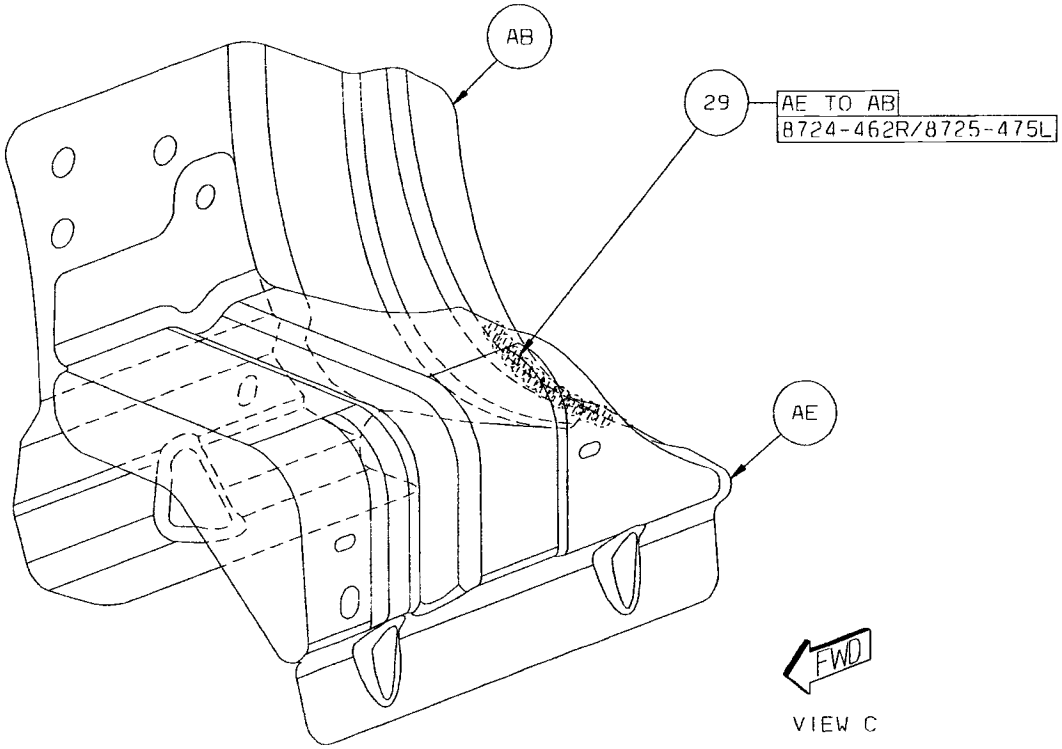

Back to Index

CHRYSLER SEBRING BODY SIDE APERTURE COMPLETE SECTION

AA FRAME – WINDSHIELD OPENING SIDE OTR LT –
AB REINF – A-PILLAR RT –
AB REINF – A-PILLAR LT –
AC BEAM – UPR LOAD PATH OTR RT –
AC BEAM – UPR LOAD PATH OTR LT –
AD FRAME – WINDSHIELD FRAME INR RT –
AD FRAME – WINDSHIELD FRAME INR LT –
AE REINF – BODY SIDE SILL OTR RT –
AE REINF – BODY SIDE SILL OTR LT –
AF TAPPING PLATE – FRT DOOR HINGE LWR RT –
AF TAPPING PLATE – FRT DOOR HINGE LWR LT –
AG PANEL – SILL OTR RT –
AG PANEL – SILL OTR LT –
AH GUSSET – A-PILLAR INR RT –
AH GUSSET – A-PILLAR INR LT –
AJ REINF – FRT DOOR HINGE PILLAR LWR RT –
AJ REINF – FRT DOOR HINGE PILLAR LWR LT –
AK PANEL – QTR OTR RT –
AK PANEL – QTR OTR LT –
AL REINF – QTR OTR PANEL FRT RT –
AL REINF – QTR OTR PANEL FRT LT –
AM PANEL – QTR INR RT –
AM PANEL – QTR INR LT –
AN GUSSET – IMPACT BODY SIDE SILL –
AN GUSSET – IMPACT BODY SIDE SILL –
AP FILLER – DRAIN TROUGH – RT –
AP FILLER – DRAIN TROUGH – LT –
AR PANEL – RR WHEELHOUSE OTR RT –
AR PANEL – RR WHEELHOUSE OTR LT –
AS PANEL – TAIL LAMP MOUNTING RT –
AS PANEL – TAIL LAMP MOUNTING LT –

Back to Index

PARTS IDENTIFICATION LEGEND, OVERVIEW 31

AA FRAME – WINDSHIELD OPENING SIDE OTR LT –
AB REINF – A-PILLAR RT –
AB REINF – A-PILLAR LT –
AC BEAM – UPR LOAD PATH OTR RT –
AC BEAM – UPR LOAD PATH OTR LT –
AD FRAME – WINDSHIELD FRAME INR RT –
AD FRAME – WINDSHIELD FRAME INR LT –
AE REINF – BODY SIDE SILL OTR RT –
AE REINF – BODY SIDE SILL OTR LT –
AF TAPPING PLATE – FRT DOOR HINGE LWR RT –
AF TAPPING PLATE – FRT DOOR HINGE LWR LT –
AG PANEL – SILL OTR RT –
AG PANEL – SILL OTR LT –
AH GUSSET – A-PILLAR INR RT –
AH GUSSET – A-PILLAR INR LT –
AJ REINF – FRT DOOR HINGE PILLAR LWR RT –
AJ REINF – FRT DOOR HINGE PILLAR LWR LT –
AK PANEL – QTR OTR RT –
AK PANEL – QTR OTR LT –
AL REINF – QTR OTR PANEL FRT RT –
AL REINF – QTR OTR PANEL FRT LT –
AM PANEL – QTR INR RT –
AM PANEL – QTR INR LT –
AN GUSSET – IMPACT BODY SIDE SILL –
AN GUSSET – IMPACT BODY SIDE SILL –
AP FILLER – DRAIN TROUGH – RT –
AP FILLER – DRAIN TROUGH – LT –
AR PANEL – RR WHEELHOUSE OTR RT –
AR PANEL – RR WHEELHOUSE OTR LT –
AS PANEL – TAIL LAMP MOUNTING RT –
AS PANEL – TAIL LAMP MOUNTING LT –

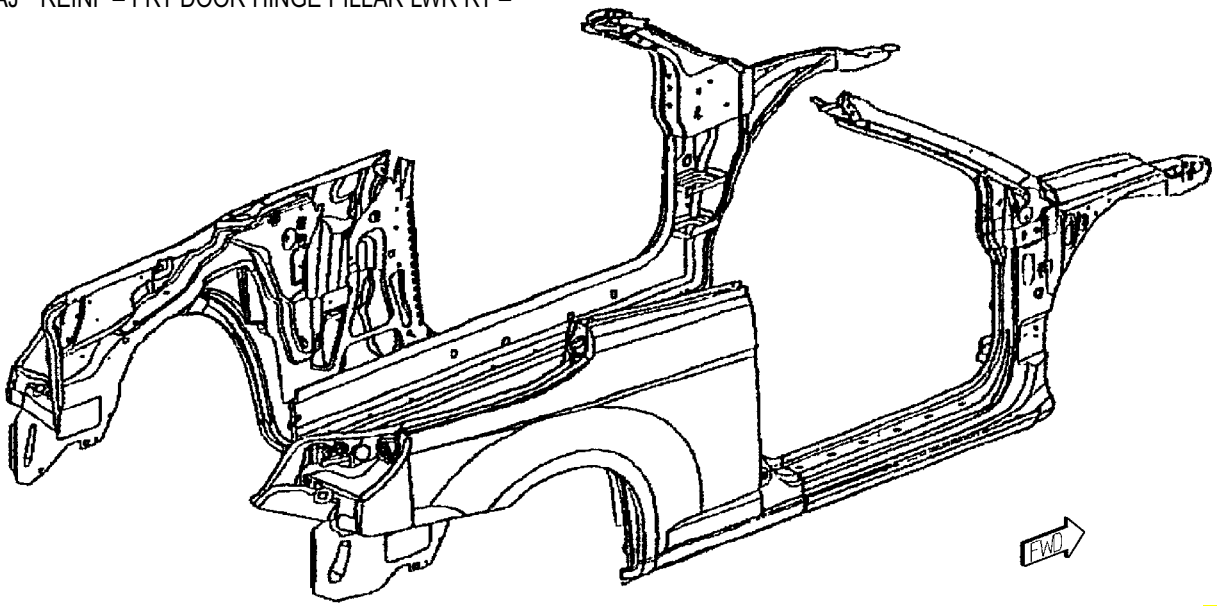

Back to Index

WELD LAYOUT LOCATION GUIDE

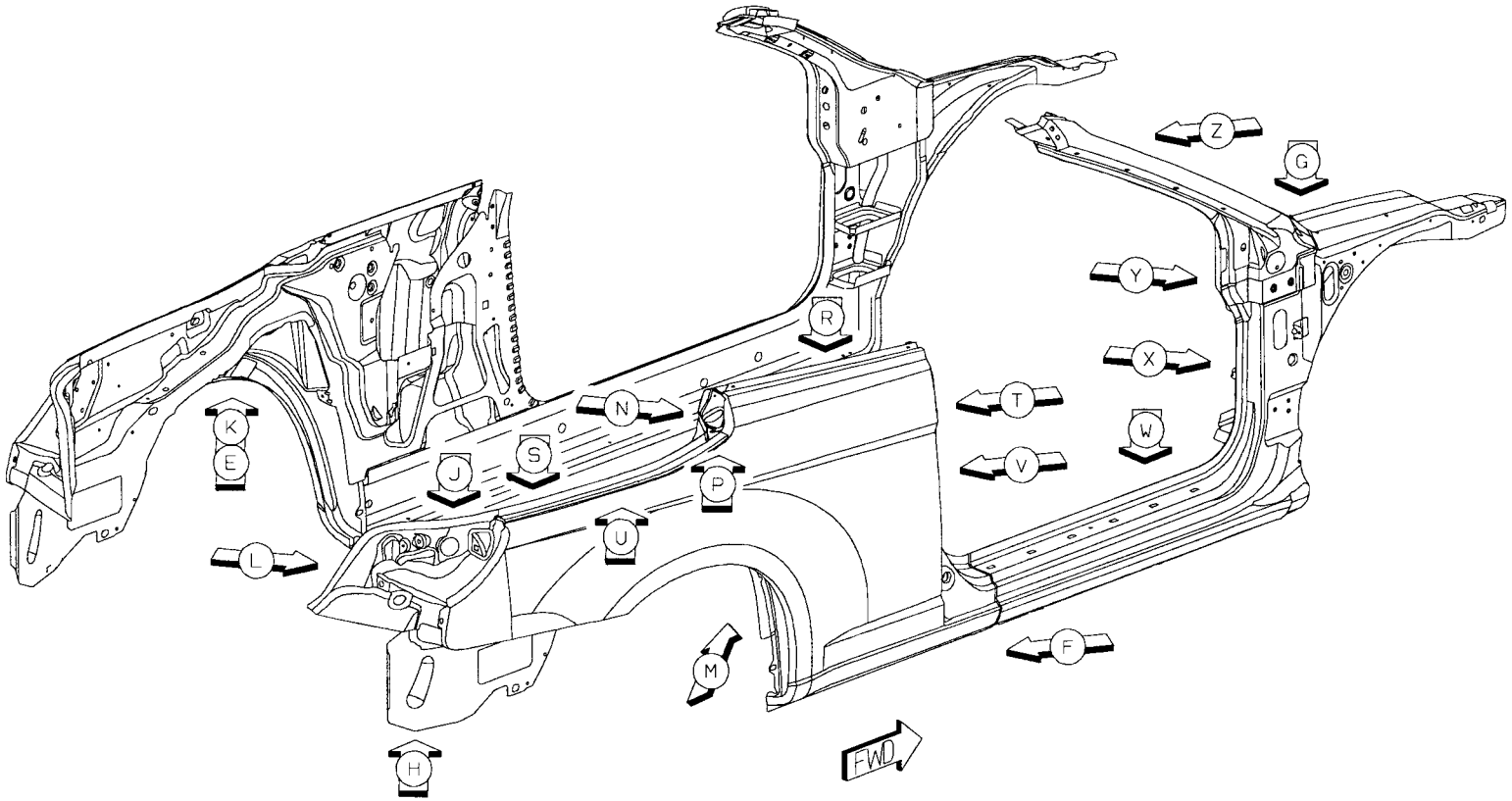

Back to Index

01 AA TO AB TO AC 2/SD S/WELDS (ORD)
02 AA TO AB TO AD 21/SD S/WELDS (ORD)
03 AB TO AD 4/SD S/WELDS (ORD)
04 AB TO AC 3/SD S/WELDS (ORD)

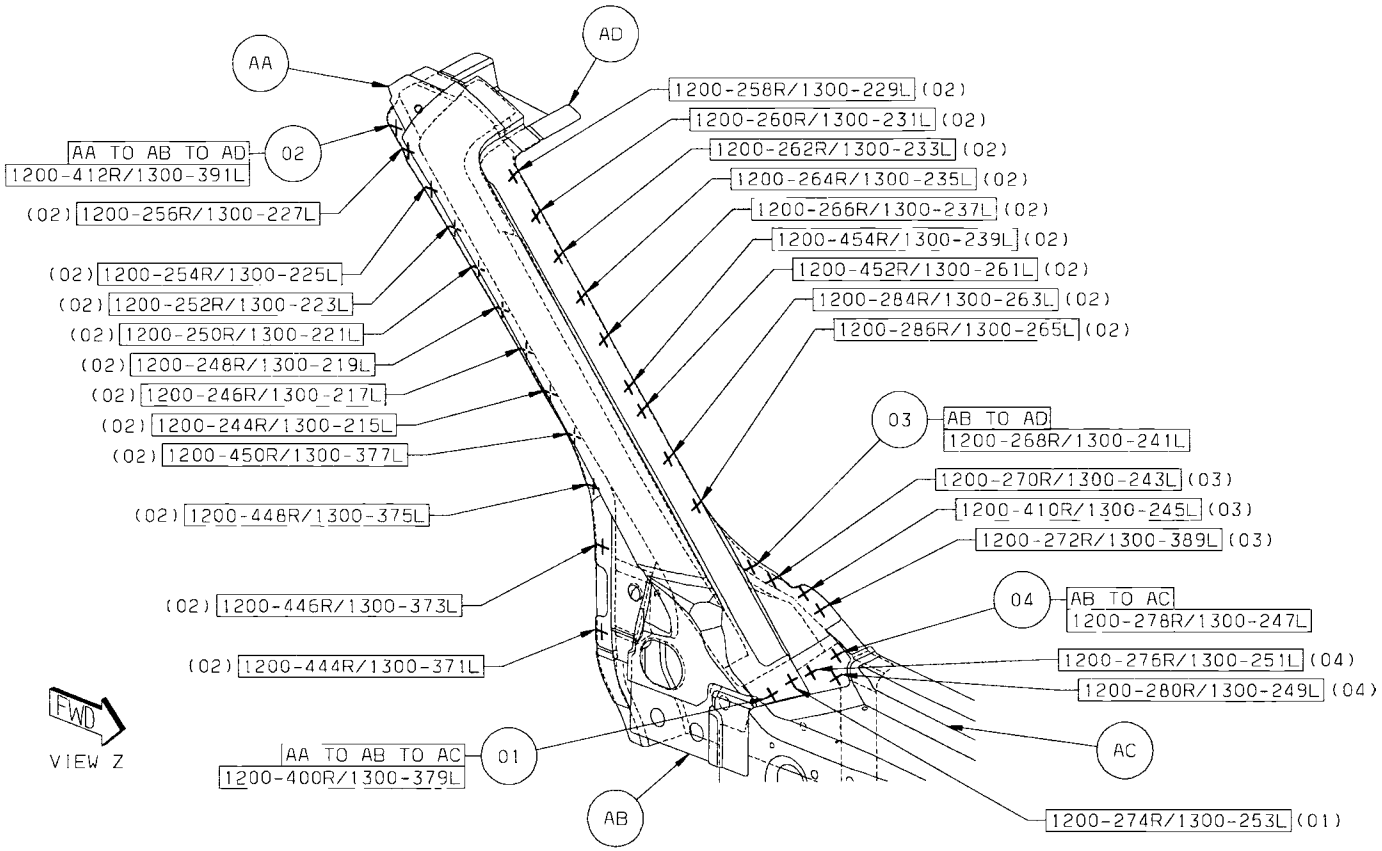

Back to Index

05 AD TO AF 3/SD S/WELDS (ORD)
06 AE TO AD 2/SD S/WELDS (CRT)
07 AB TO AE TO AD 2/SD S/WELDS (ORD)
08 AG TO AC TO AE 4/SD S/WELDS (ORD)
09 AG TO AH TO AE 3/SD S/WELDS (ORD)
10 AG TO AJ TO AE 3/SD S/WELDS (ORD)

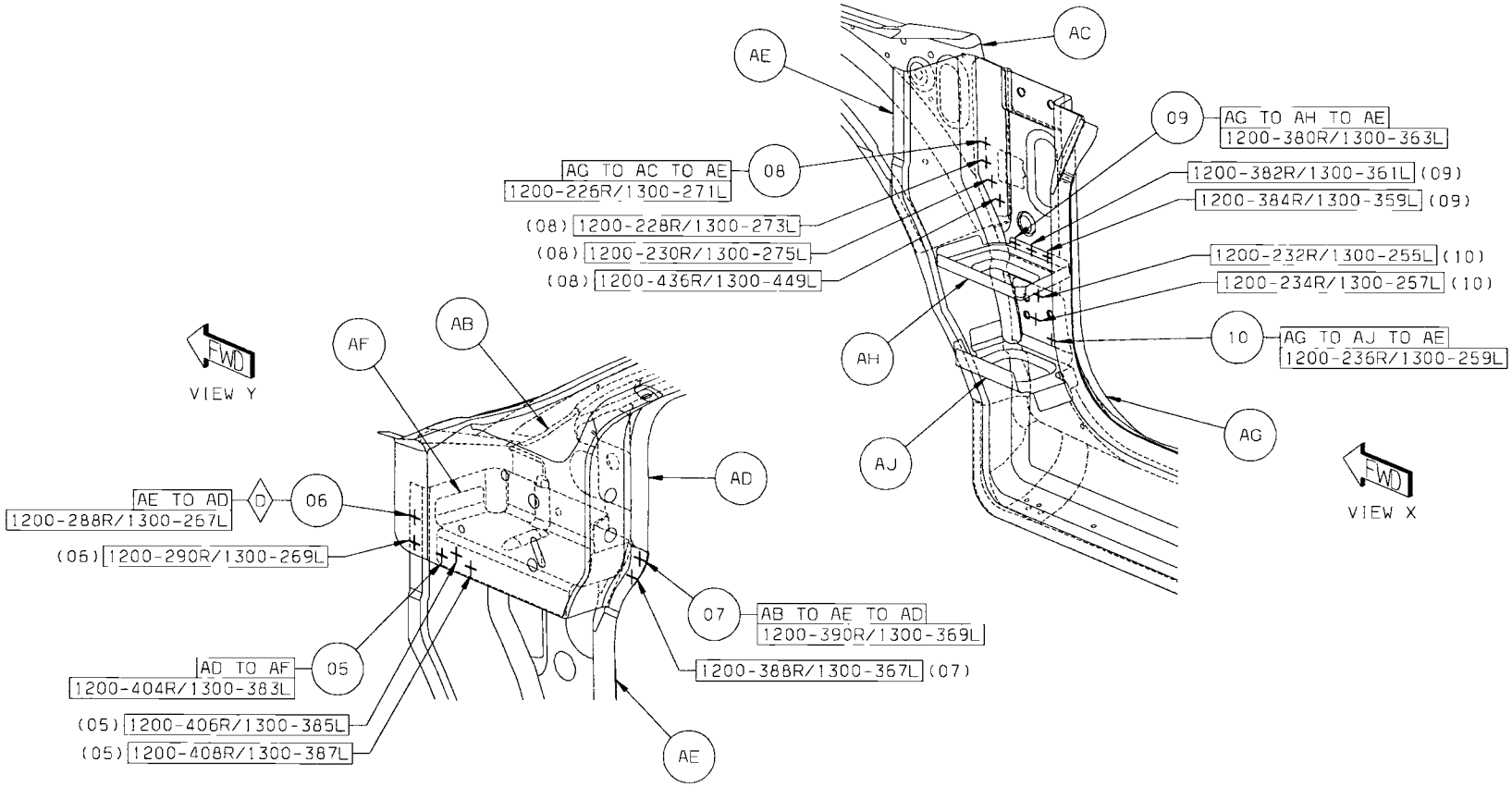

Back to Index

11 AG TO AE 23/SD S/WELDS (ORD)
12 AK TO AE 5/SD S/WELDS (ORD)

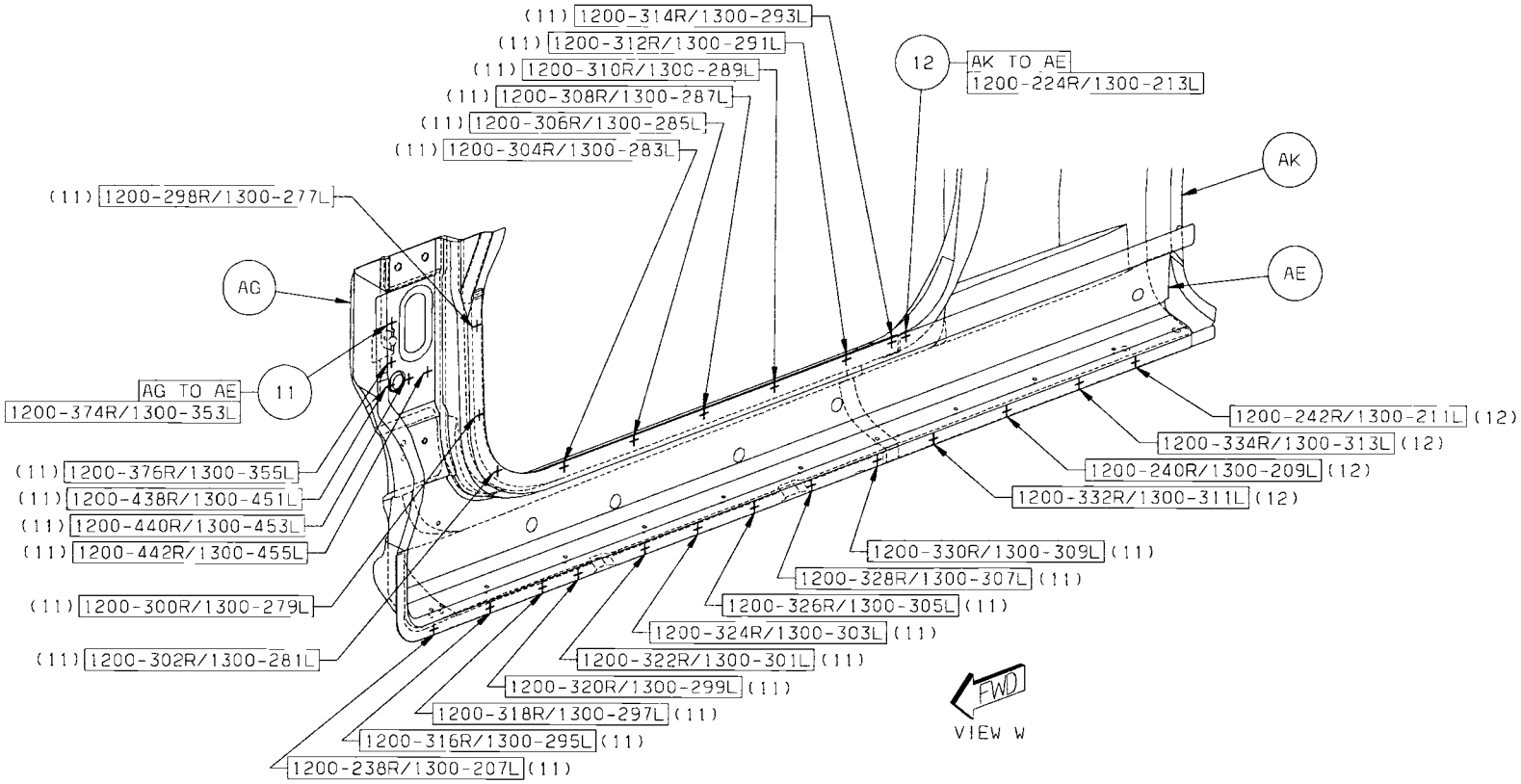

Back to Index

13 AK TO AL TO AM 24/SD S/WELDS

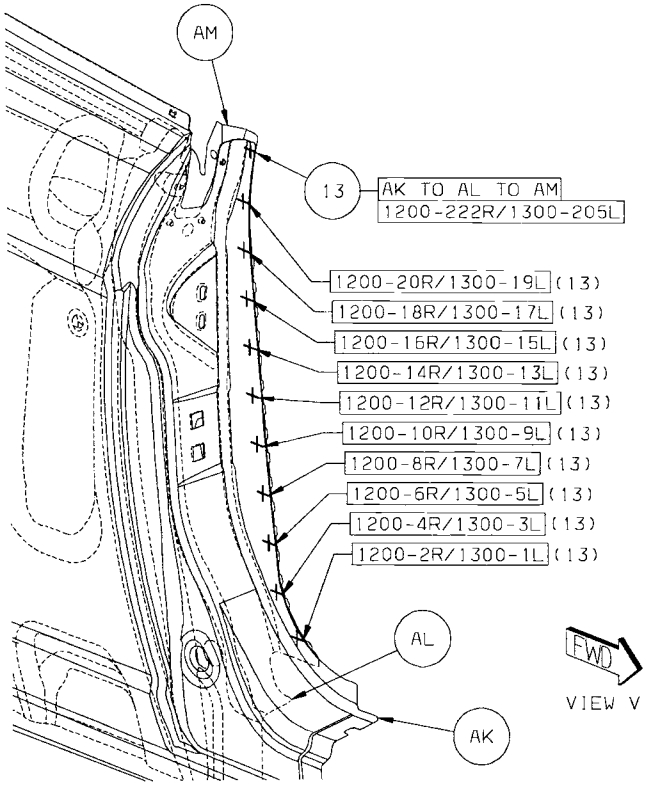

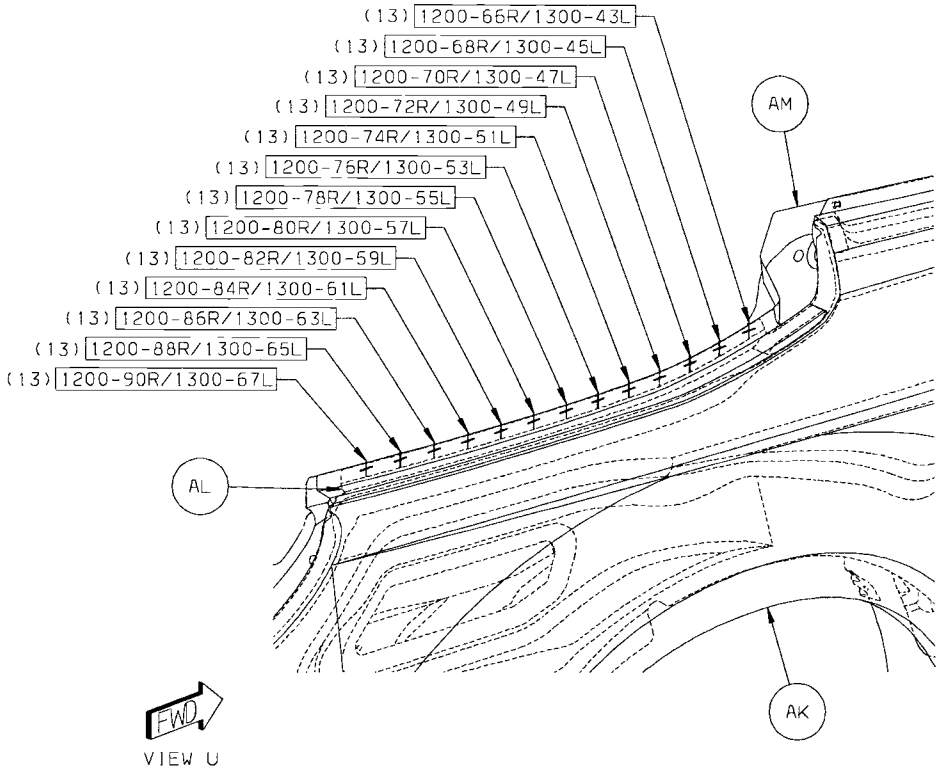

Back to Index

14 AK TO AL 24/SD S/WELDS (ORD)

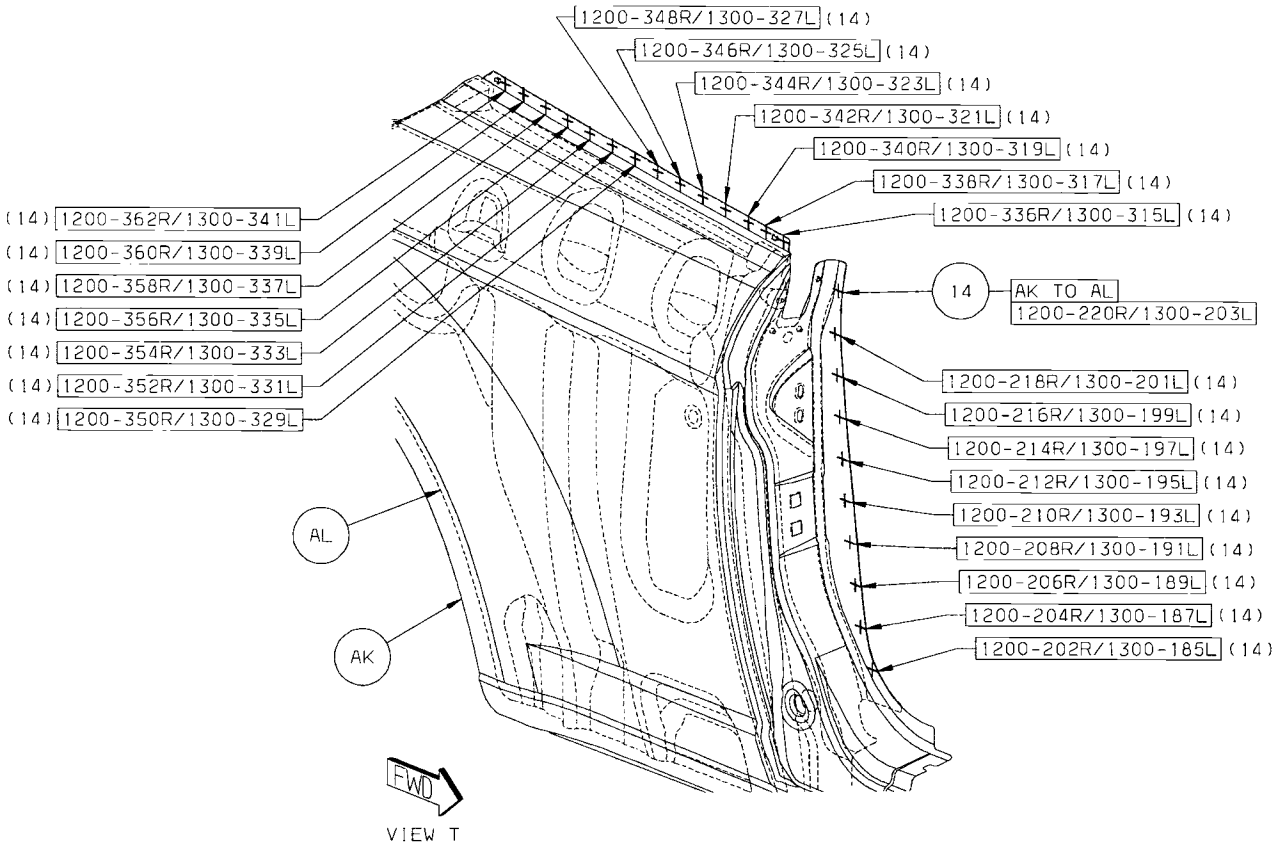

Back to Index

30 AK TO AL 15/SD S/WELDS (ORD)

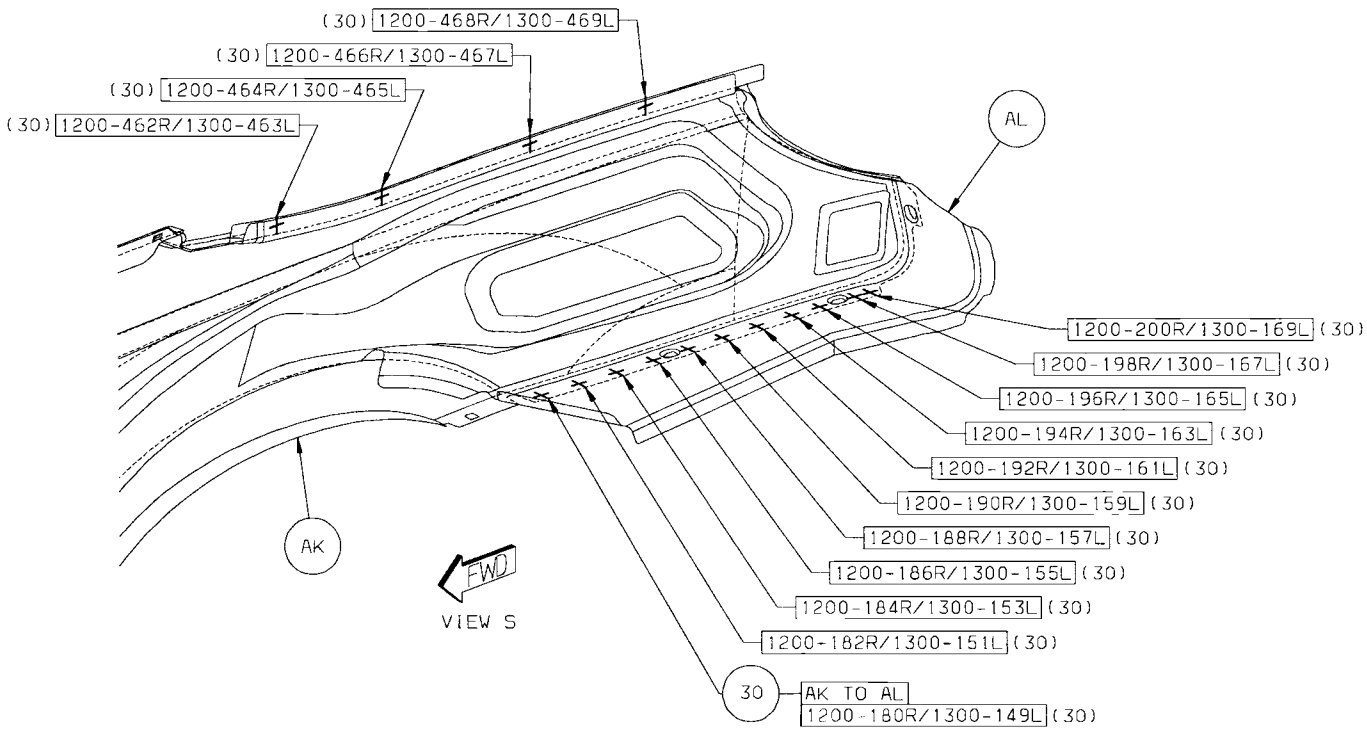

Back to Index

15 AM TO AN 10/SD S/WELDS (ORD)

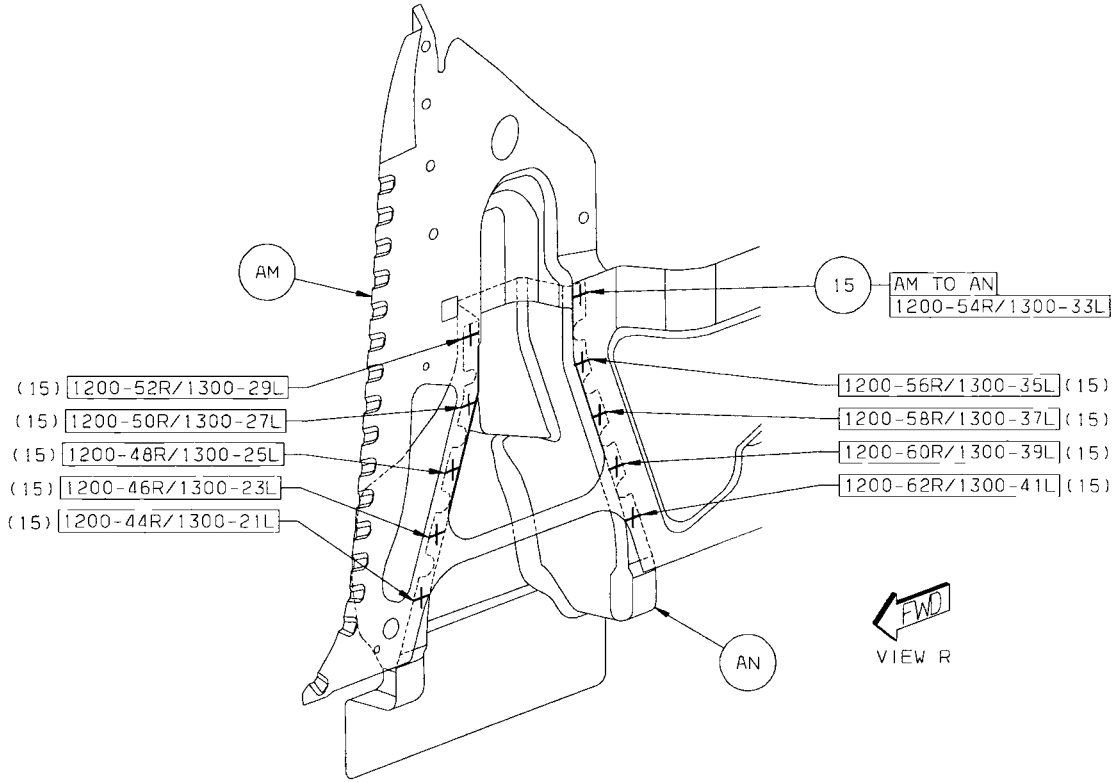

Back to Index

16 AM TO AP TO AK 1/SD S/WELDS (ORD)
17 AK TO AL TO AP 4/SD S/WELDS (ORD)
18 AM TO AP 5/SD S/WELDS (ORD)

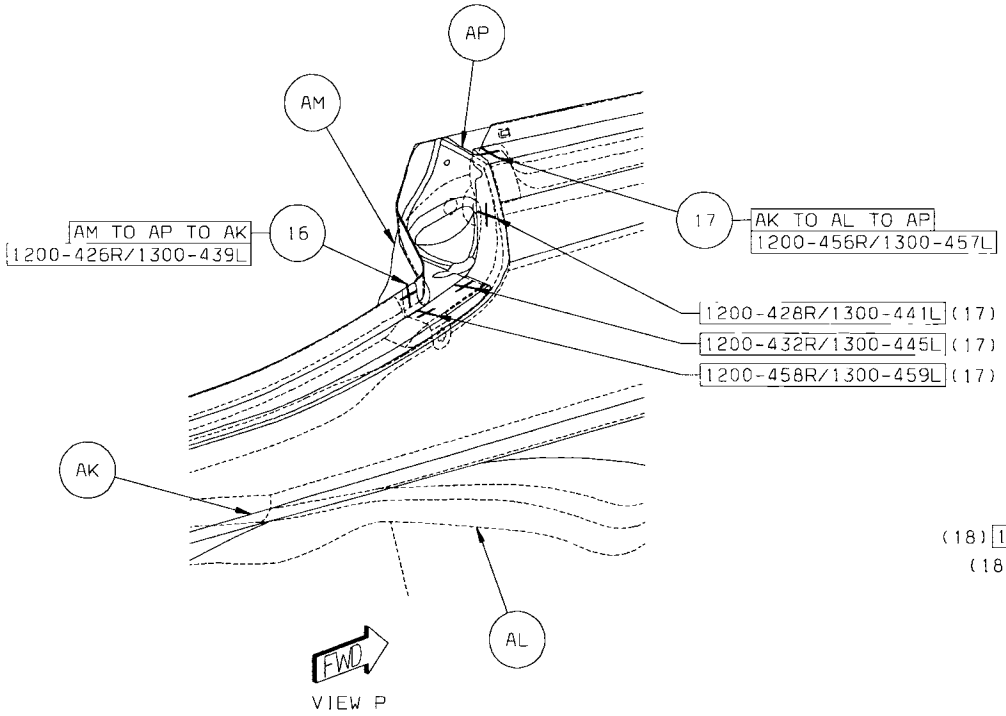

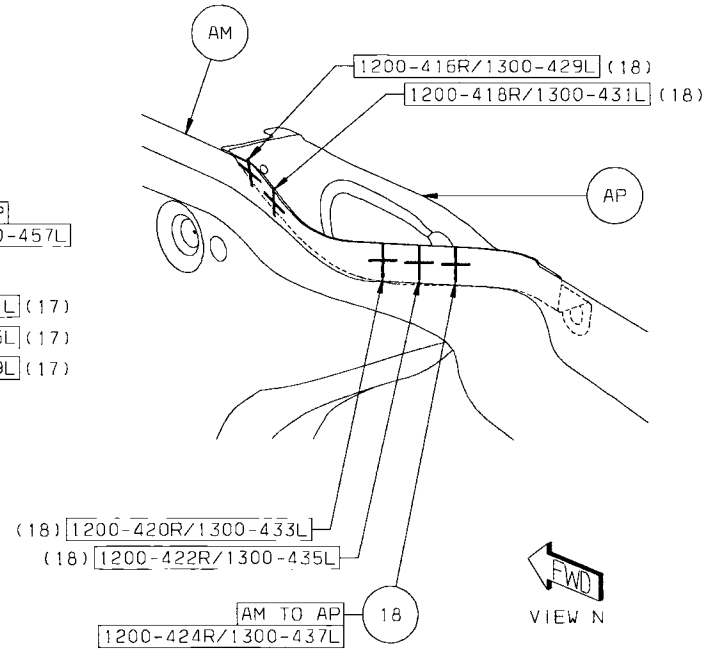

Back to Index

19 AK TO AR 25R/24L S/WELDS (ORD)

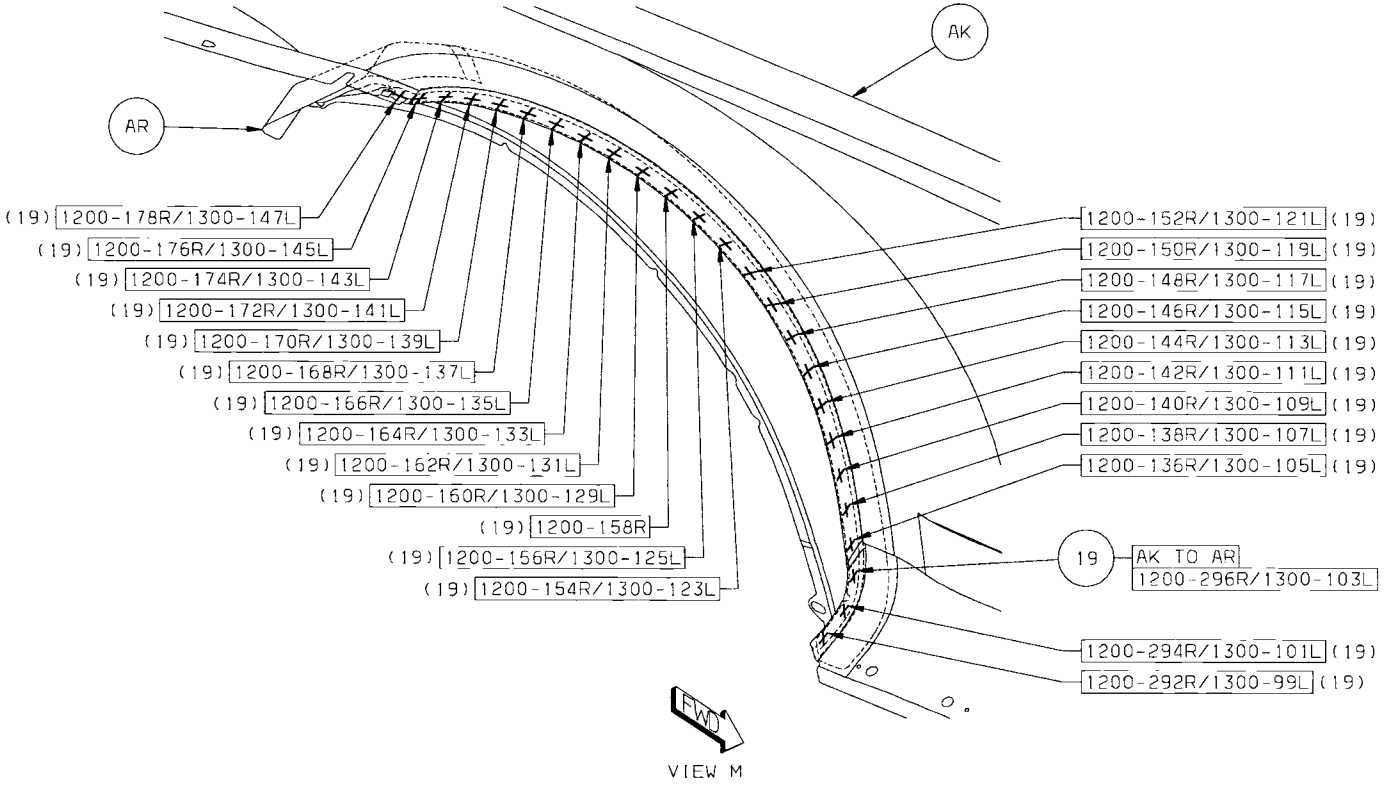

Back to Index

20 AM TO AR 11R S/WELDS (ORD)

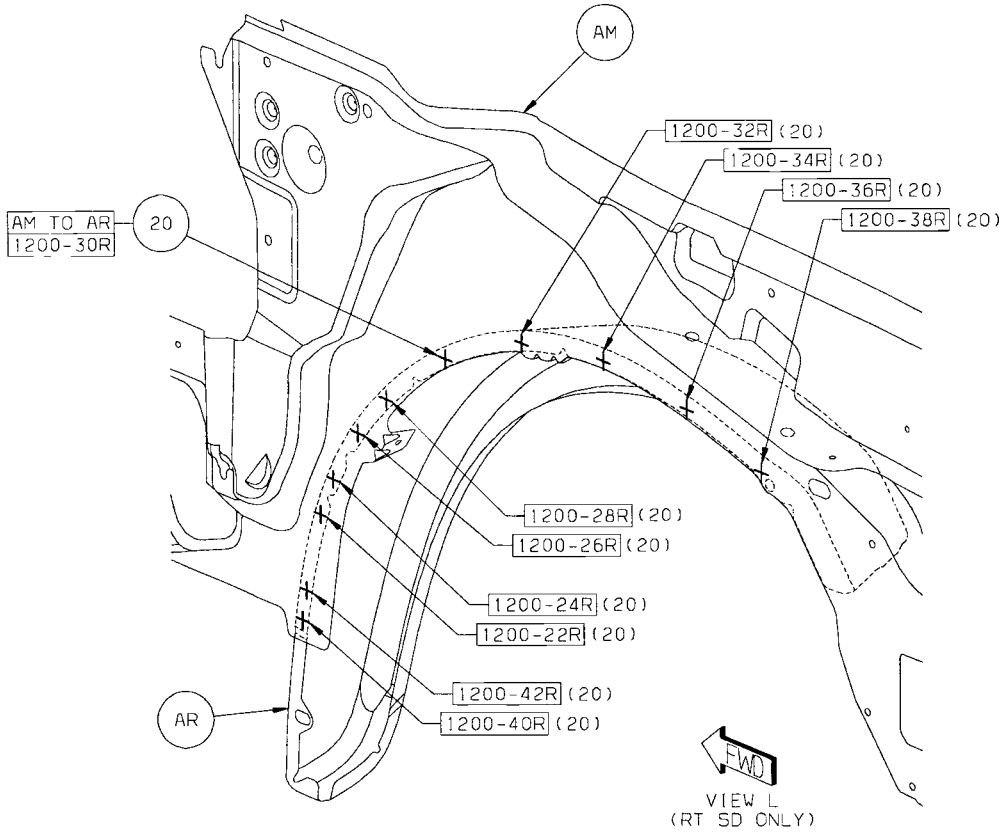

Back to Index

21 AM TO AR 17L S/WELDS (ORD)

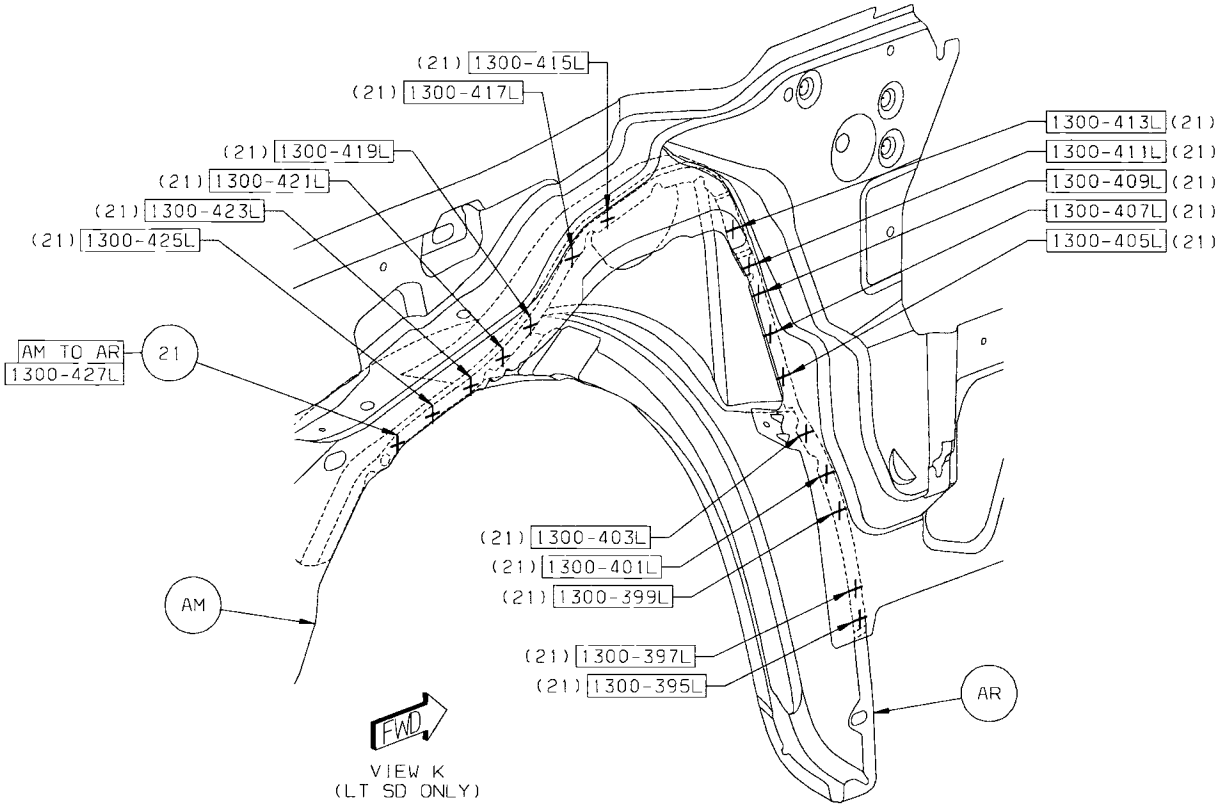

Back to Index

22 AL TO AM 11/SD S/WELDS (ORD)

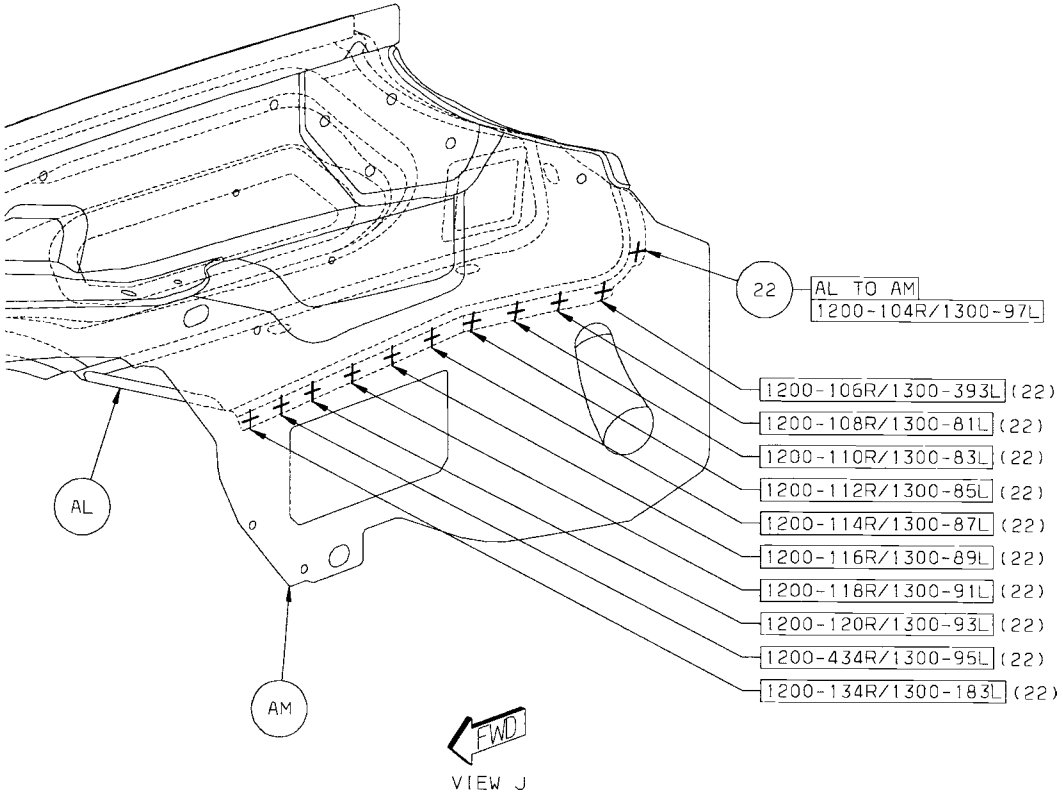

Back to Index

23 AS TO AL 2/SD S/WELDS (ORD)
24 AM TO AL TO AS 1/SD S/WELDS (ORD)
25 AM TO AS 5/SD S/WELDS (ORD)
26 AK TO AS TO AL 4/SD S/WELDS (ORD)

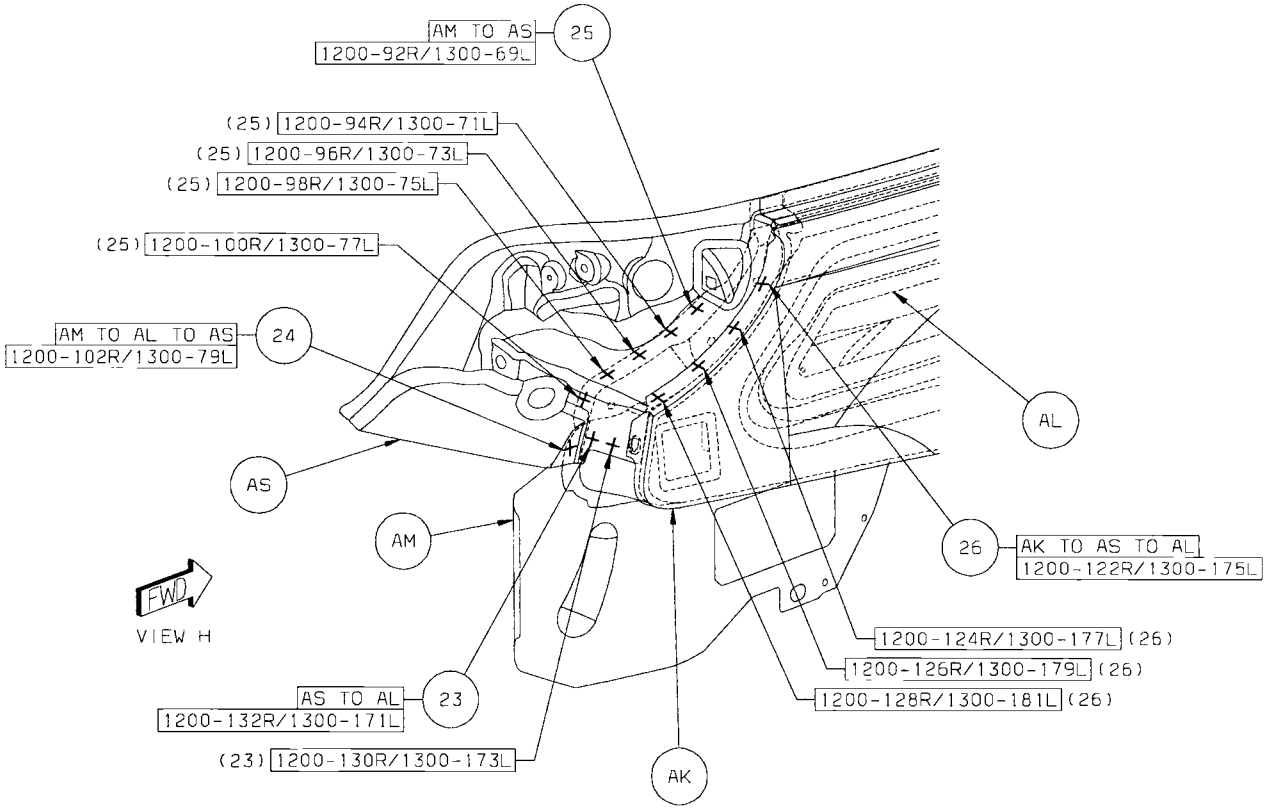

Back to Index

27 AG TO AE 1/SD STRUC ADH
28 AM TO AN 1/SD STRUC ADH

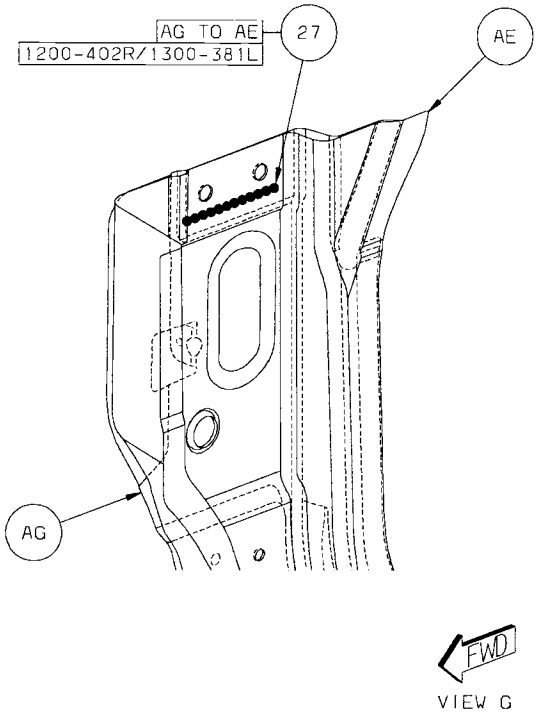

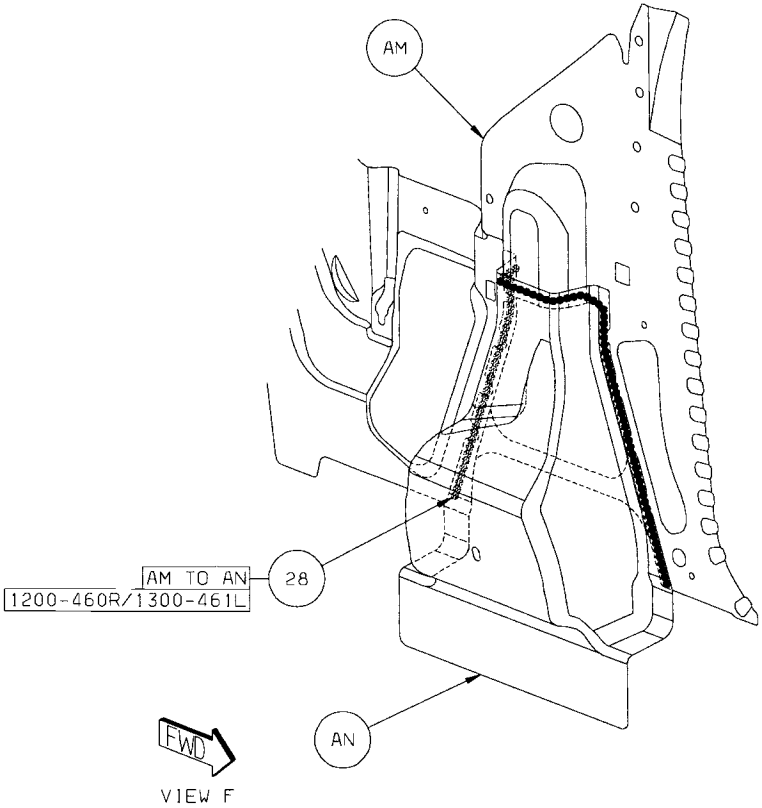

Back to Index

29 AM TO AR 1L STRUC ADH

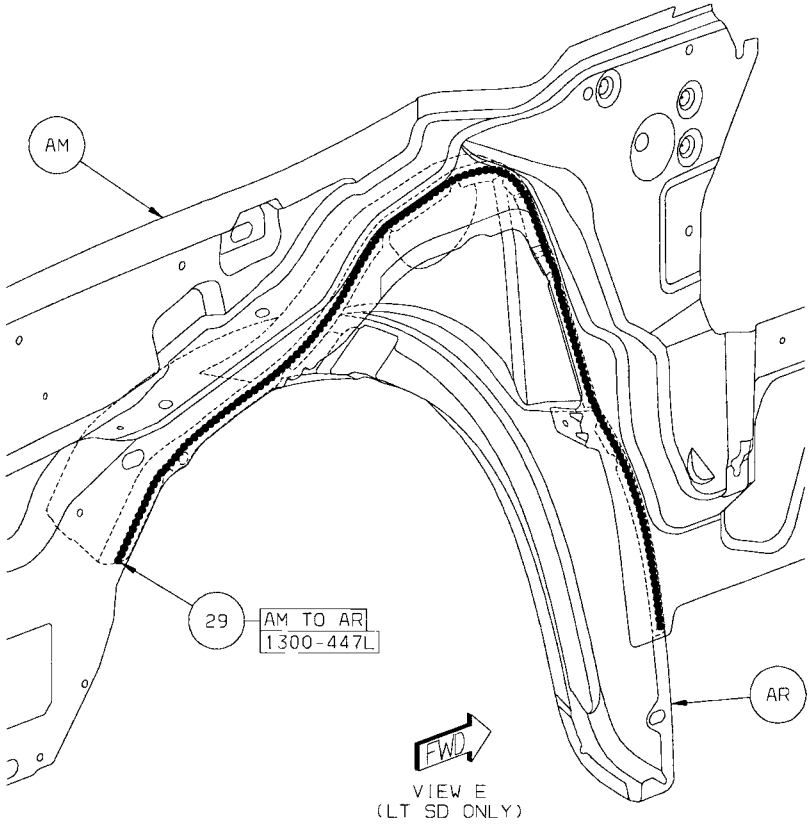

Back to Index

DODGE AVENGER BODY SIDE APERTURE COMPLETE SECTION

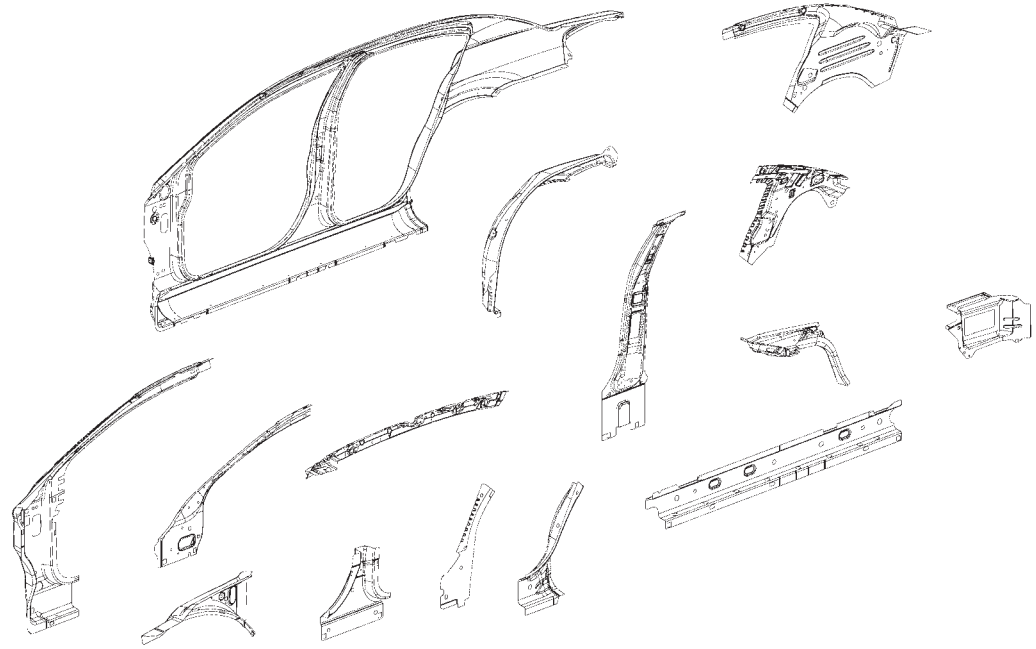

AA PANEL – BODY SIDE APERTURE RT –
AA PANEL – BODY SIDE APERTURE LT –
AB BEAM – UPR LOAD PATH OTR RT –
AB BEAM – UPR LOAD PATH OTR LT –
AC PANEL – HINGE PILLAR RT –
AC PANEL – HINGE PILLAR LT –
AD SILL – OTR RT –
AD SILL – OTR LT –
AE FRAME – WINDSHIELD OPENING SIDE INR –
AE FRAME – WINDSHIELD OPENING SIDE INR –
AF REINF – B-PILLAR LWR & SILL RT –
AF REINF – B-PILLAR LWR & SILL LT –
AG PANEL – B-PILLAR INR RT –
AG PANEL – B-PILLAR INR LT –
AH PANEL – B-PILLAR RT –
AH PANEL – B-PILLAR LT –
AJ PANEL – QTR INR RR RT –
AJ PANEL – QTR INR RR LT –
AK PANEL – QTR INR UPR RT –
AK PANEL – QTR INR UPR LT –
AL REINF – C-PILLAR LWR RT –
AL REINF – C-PILLAR LWR LT –
AM PANEL – QTR INR LWR RR RT –
AM PANEL – QTR INR LWR RR LT –
AN PANEL – RR CLOSURE OTR LWR EXTENSION RT –
AN PANEL – RR CLOSURE OTR LWR EXTENSION LT –
AP PANEL – WHEELHOUSE OTR RT –
AP PANEL – WHEELHOUSE OTR RR LT –
AR TROUGH – QTR OTR PANEL DRAIN RT –
AR TROUGH – QTR OTR PANEL DRAIN LT –
AS RAIL – ROOF SIDE INR RT –
AS RAIL – ROOF SIDE INR LT –

Back to Index

PARTS IDENTIFICATION LEGEND, OVERVIEW 33

AA PANEL – BODY SIDE APERTURE RT –
AA PANEL – BODY SIDE APERTURE LT –
AB BEAM – UPR LOAD PATH OTR RT –
AB BEAM – UPR LOAD PATH OTR LT –
AC PANEL – HINGE PILLAR RT –
AC PANEL – HINGE PILLAR LT –
AD SILL – OTR RT –
AD SILL – OTR LT –
AE FRAME – WINDSHIELD OPENING SIDE INR –
AE FRAME – WINDSHIELD OPENING SIDE INR –
AF REINF – B-PILLAR LWR & SILL RT –
AF REINF – B-PILLAR LWR & SILL LT –
AG PANEL – B-PILLAR INR RT –
AG PANEL – B-PILLAR INR LT –
AH PANEL – B-PILLAR RT –
AH PANEL – B-PILLAR LT –
AJ PANEL – QTR INR RR RT –
AJ PANEL – QTR INR RR LT –
AK PANEL – QTR INR UPR RT –
AK PANEL – QTR INR UPR LT –
AL REINF – C-PILLAR LWR RT –
AL REINF – C-PILLAR LWR LT –
AM PANEL – QTR INR LWR RR RT –
AM PANEL – QTR INR LWR RR LT –
AN PANEL – RR CLOSURE OTR LWR EXTENSION RT –
AN PANEL – RR CLOSURE OTR LWR EXTENSION LT –
AP PANEL – WHEELHOUSE OTR RT –
AP PANEL – WHEELHOUSE OTR RR LT –
AR TROUGH – QTR OTR PANEL DRAIN RT –
AR TROUGH – QTR OTR PANEL DRAIN LT –
AS RAIL – ROOF SIDE INR RT –
AS RAIL – ROOF SIDE INR LT –

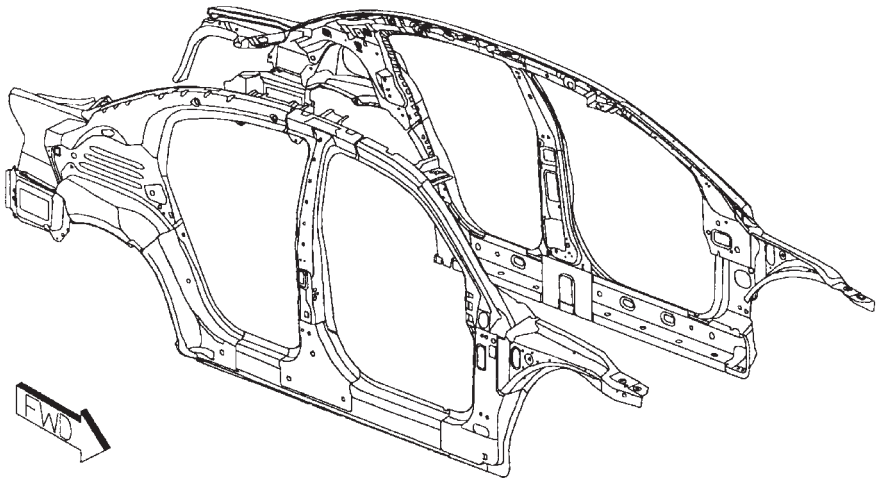

Back to Index

WELD LAYOUT LOCATION GUIDE

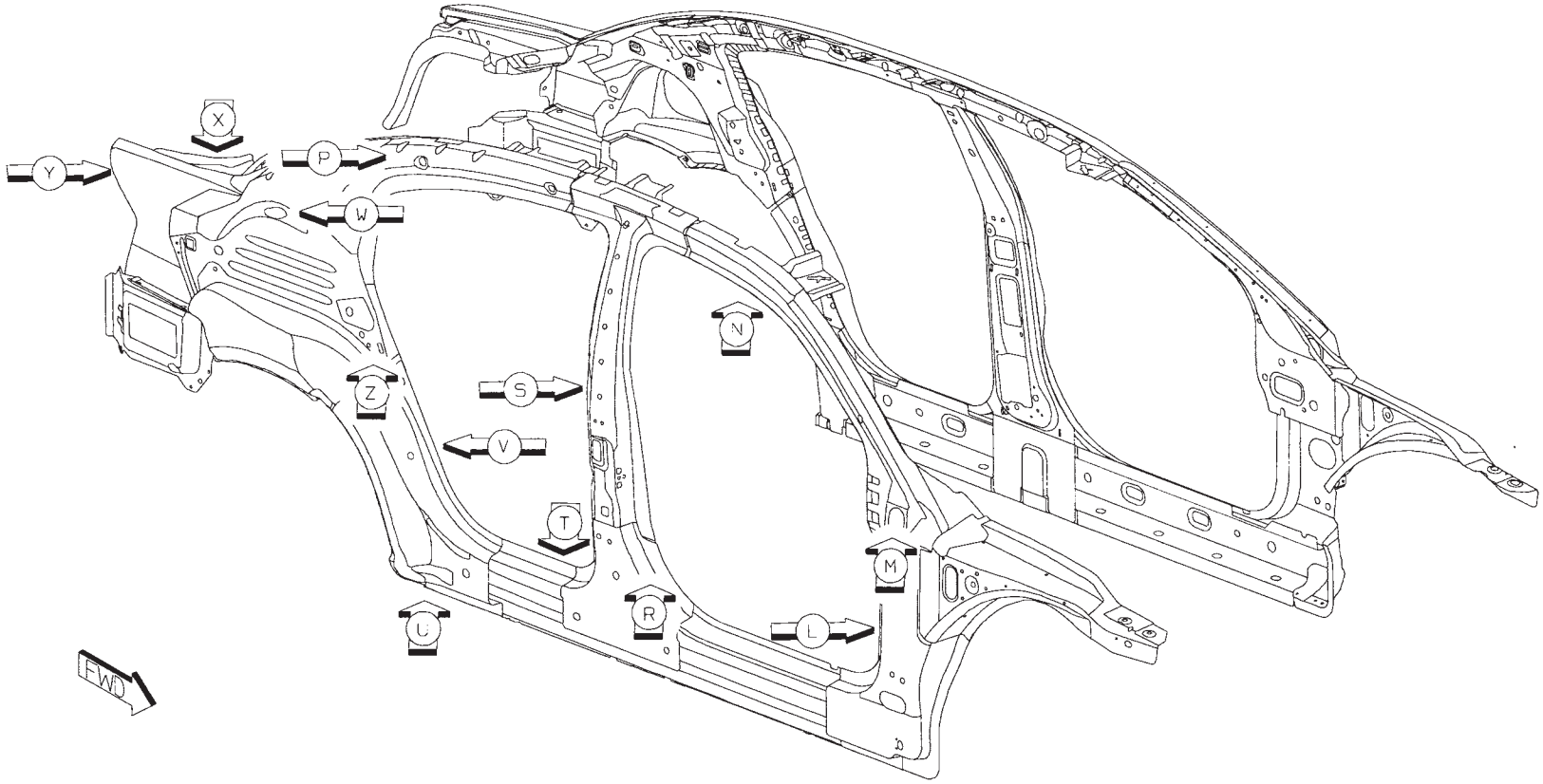

Back to Index

01 AA TO AJ TO AK 22/SD S/WELDS (ORD)

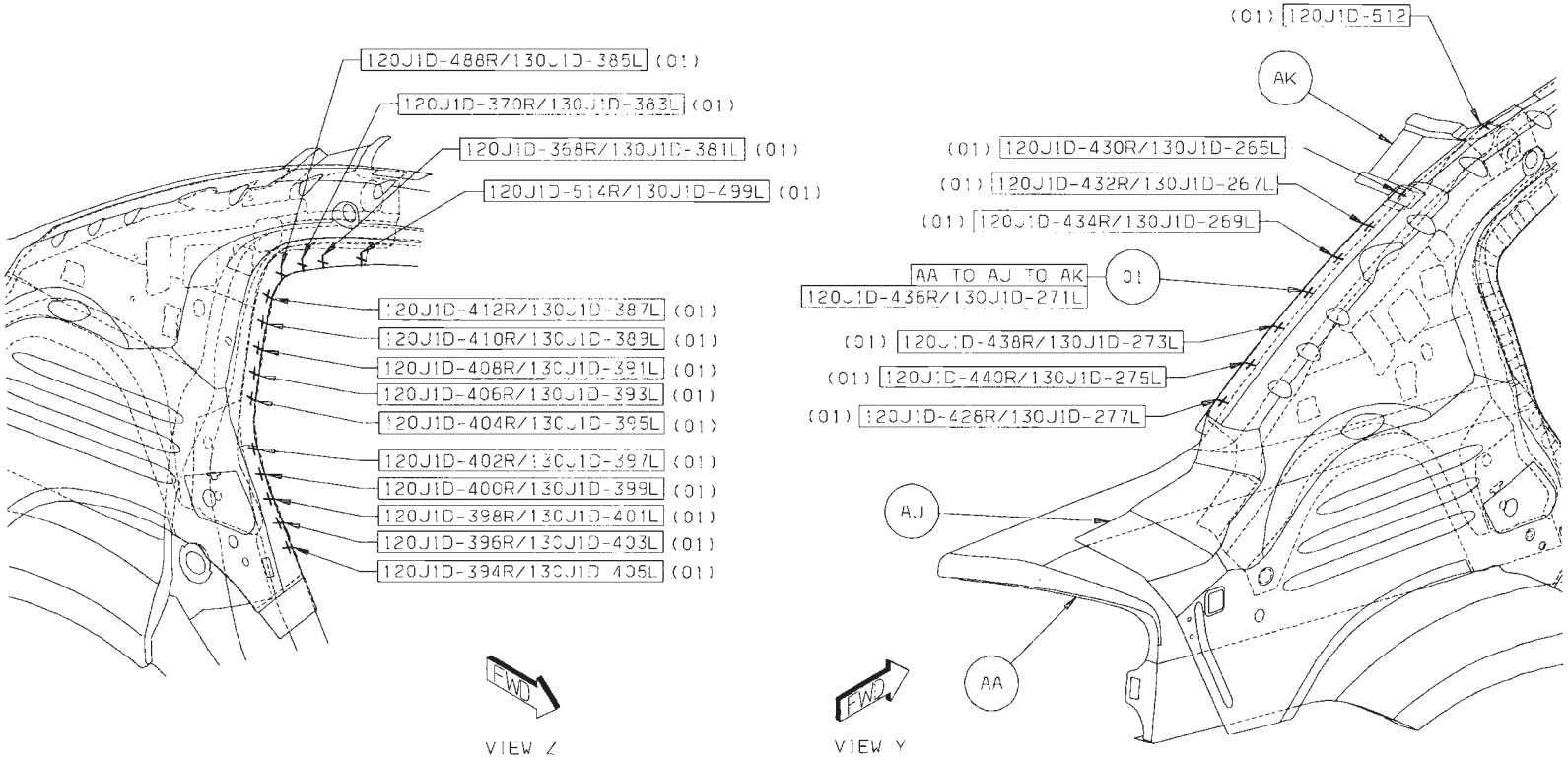

Back to Index

02 AP TO AN 2/SD S/WELDS (CRT)
03 AP TO AA 10R/9L S/WELDS (CRT)
04 AR TO AJ 2/SD S/WELDS (CRT)
05 AN TO AJ 3R/2L S/WELDS (CRT)

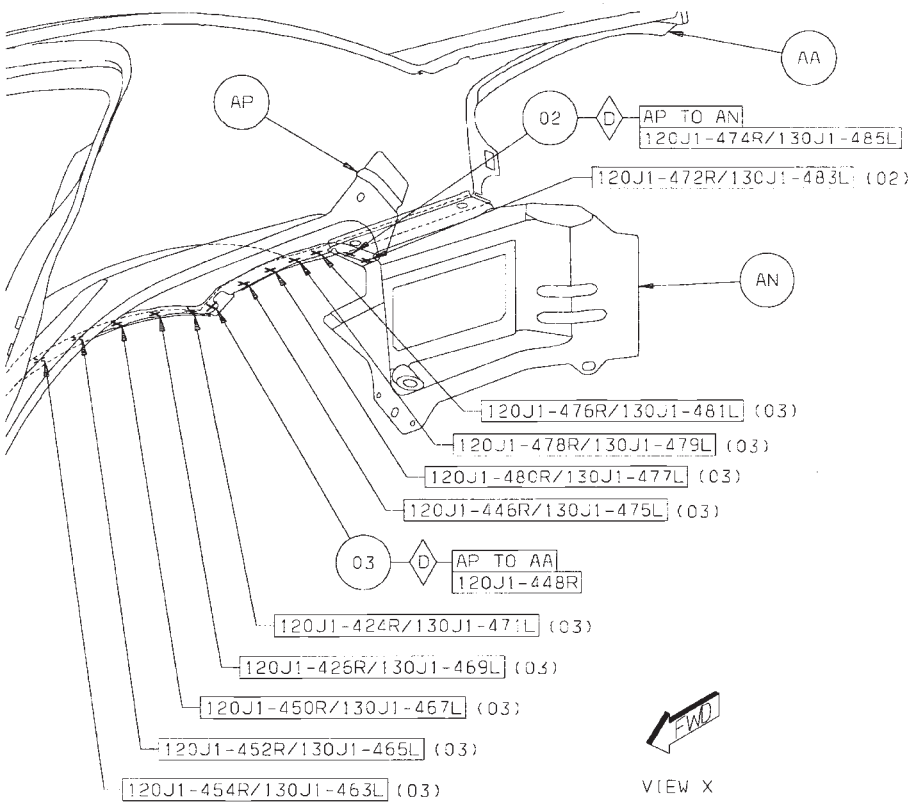

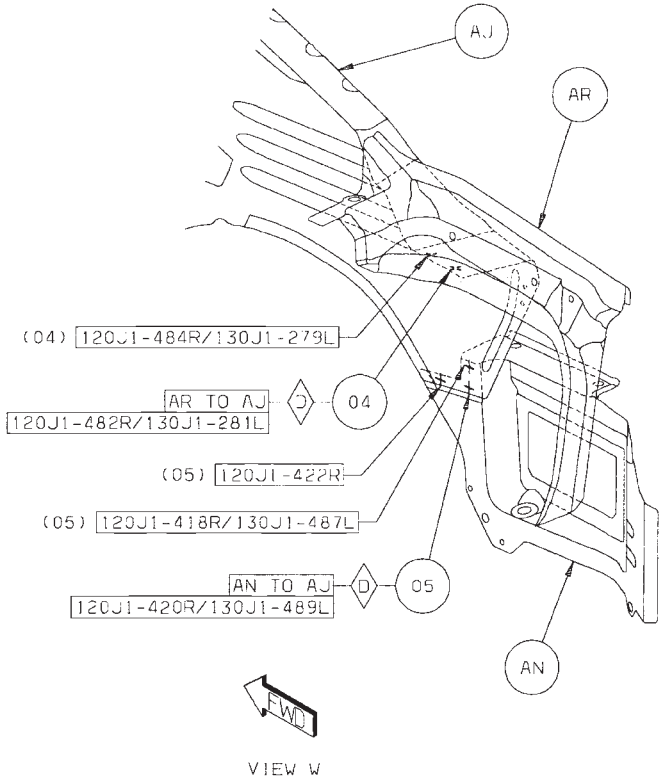

Back to Index

06 AA TO AL TO AP 9/SD S/WELDS (CRT)
07 AA TO AL 6/SD S/WELDS (CRT)
08 AL TO AA TO AM 10/SD S/WELDS (CRT)

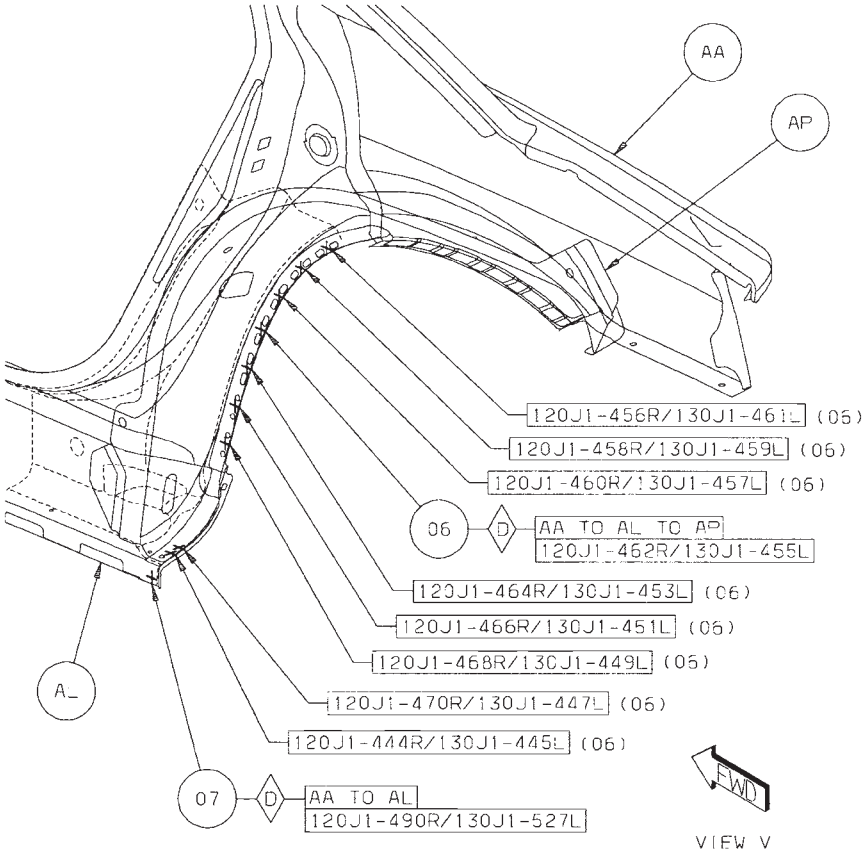

VIEW V

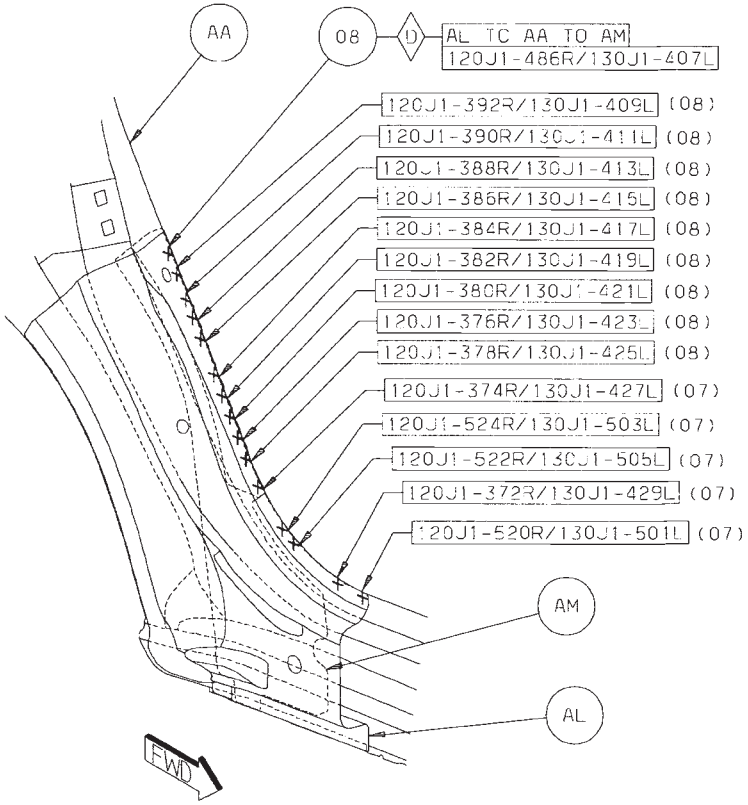

VIEW U

Back to Index

09 AD TO AA 15/SD S/WELDS (CRT)
10 AD TO AG TO AA 4/SD S/WELDS (CRT)
11 AA TO AL TO AD 2/SD S/WELDS (CRT)
12 AA TO AC TO AD 2/SD S/WELDS (CRT)

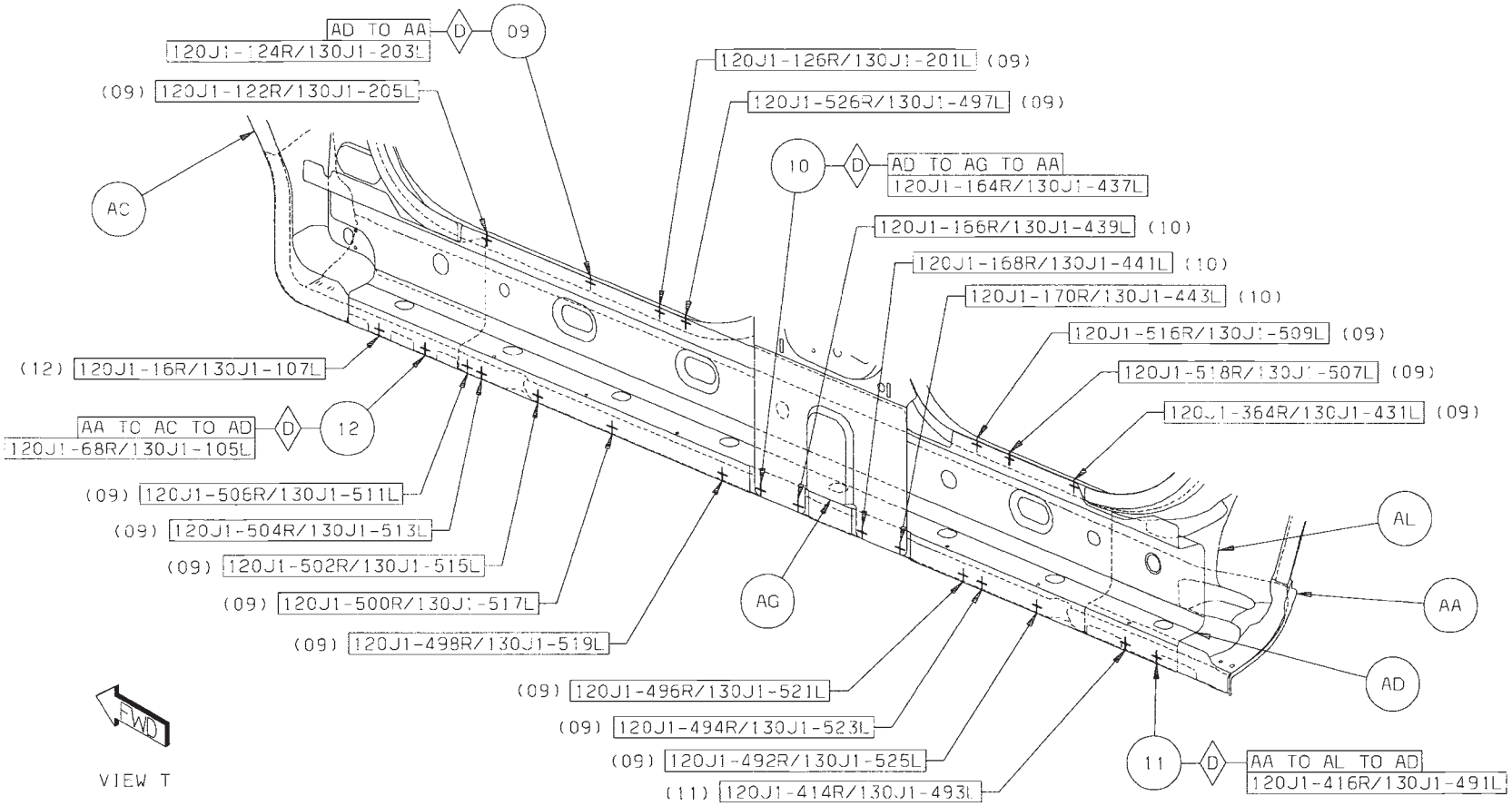

Back to Index

13 AA TO AH 2/SD S/WELDS (CRT)
14 AA TO AH TO AG 24/SD S/WELDS (CRT)
15 AA TO AG TO AF 1/SD S/WELD (CRT)
16 AF TO AA 4/SD S/WELDS (CRT)

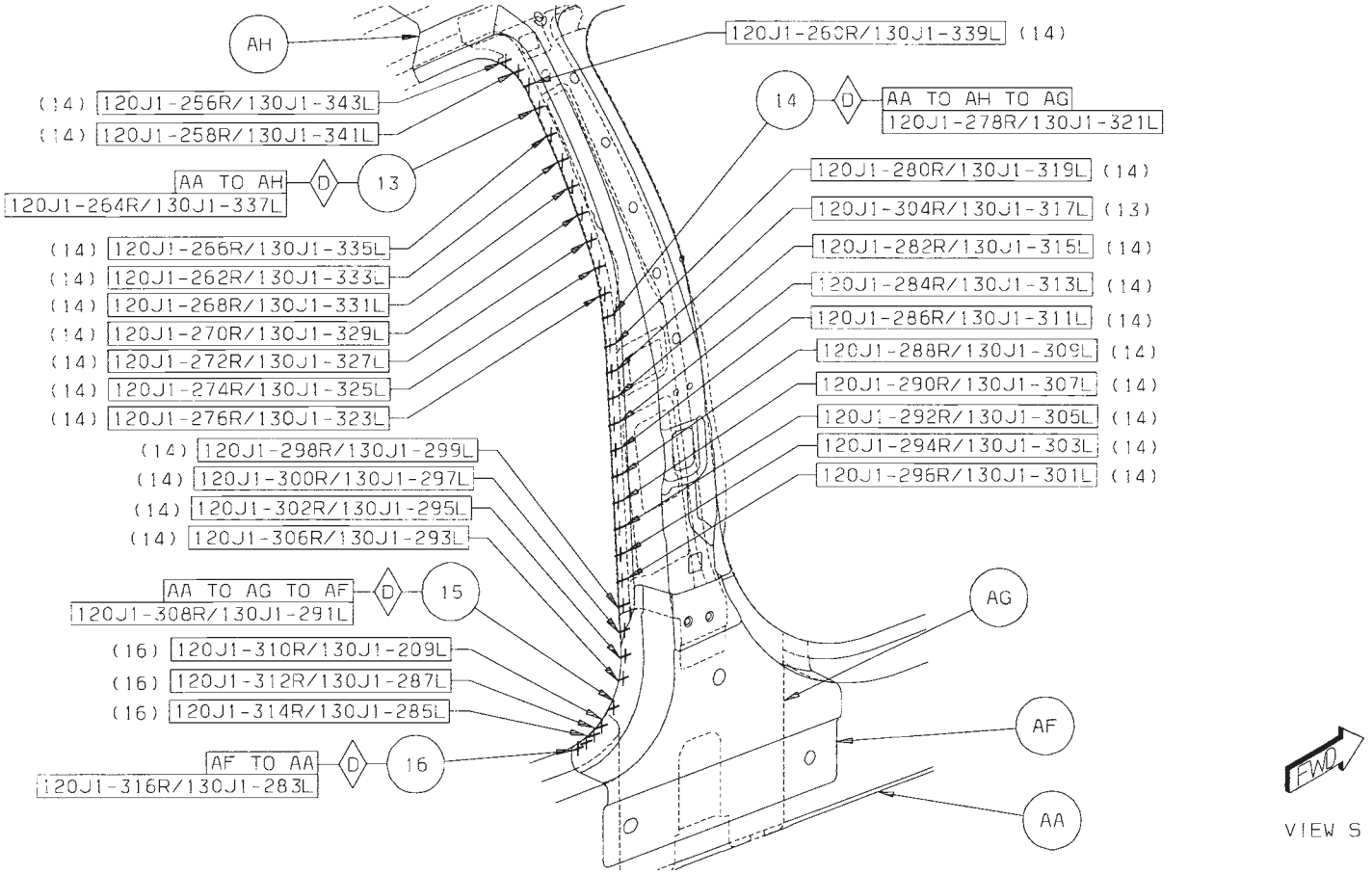

Back to Index

17 AH TO AG TO AA 22/SD S/WELDS (CRT)
18 AH TO AA 3/SD S/WELDS (CRT)
19 AF TO AG TO AA 1/SD S/WELD (CRT)
20 AF TO AA 2/SD S/WELDS (CRT)

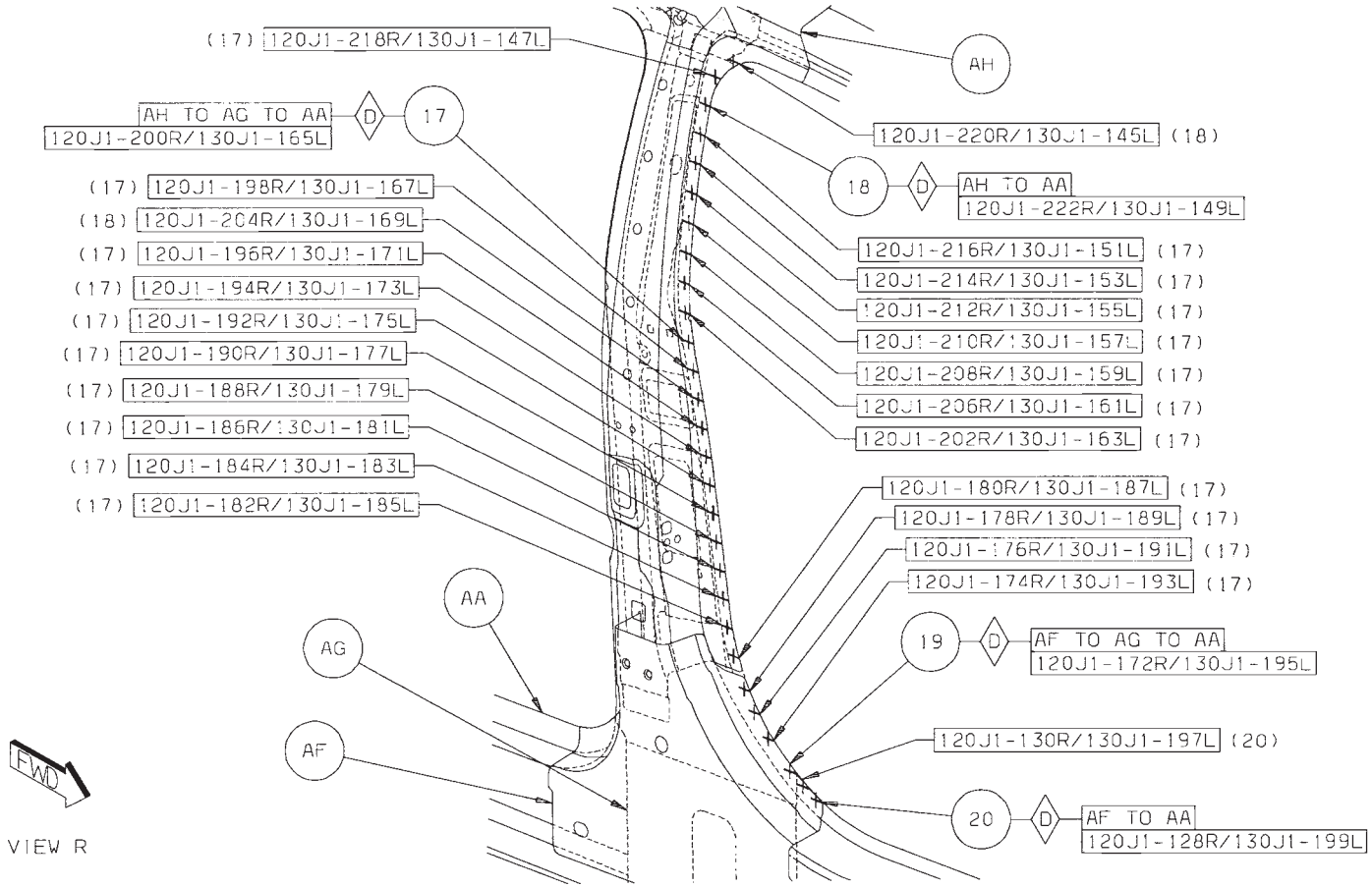

Back to Index

21 AH TO AA 1/SD S/WELD (CRT)
22 AS TO AA TO AK 2/SD S/WELDS (CRT)
23 AA TO AJ TO AS 17/SD S/WELDS (CRT)
24 AA TO AJ 6/SD S/WELDS (CRT)
25 AH TO AS TO AA 15/SD S/WELDS (CRT)

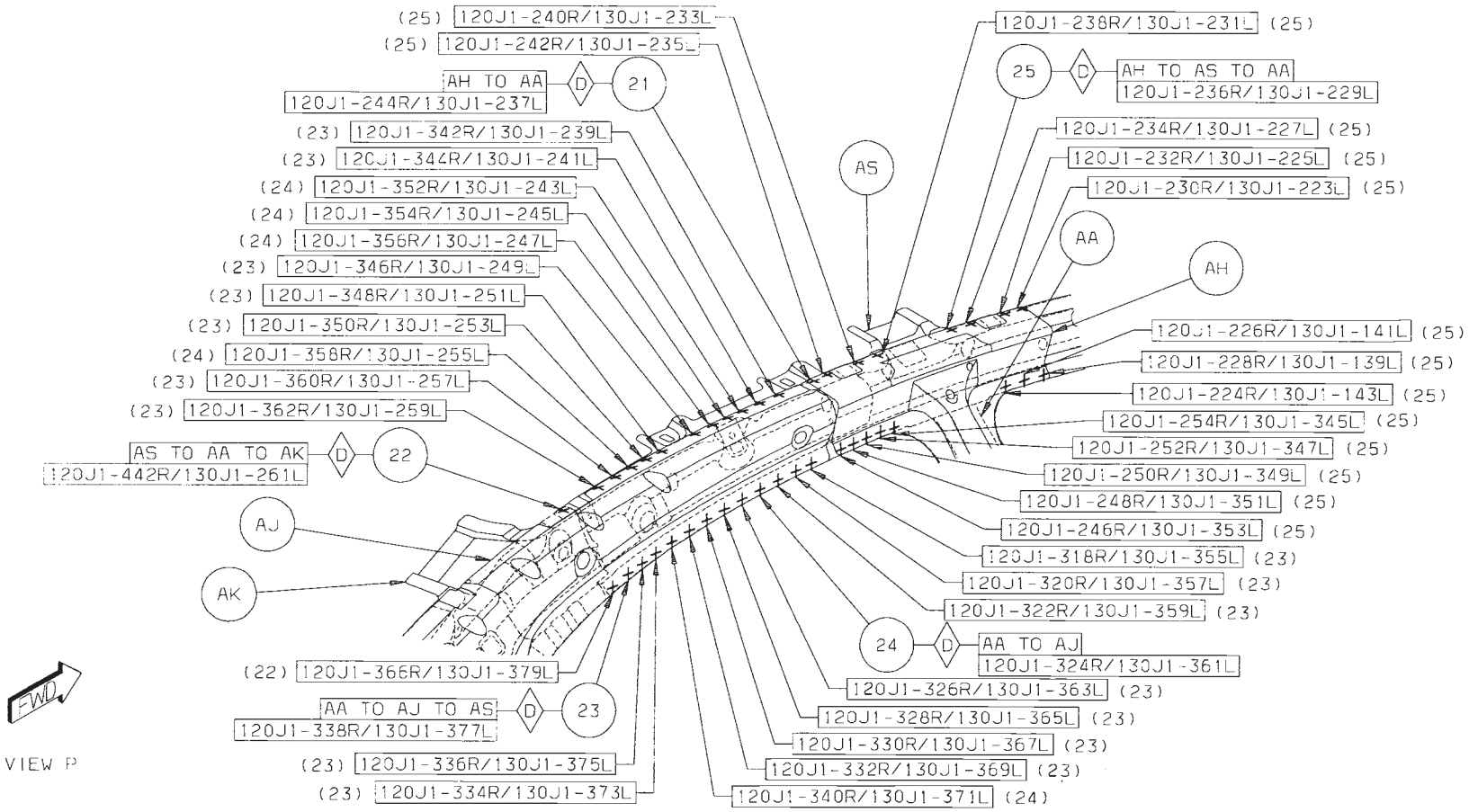

Back to Index

26 AC TO AA 3/SD S/WELDS (CRT)
27 AS TO AC TO AA 8/SD S/WELDS (CRT)
28 AE TO AC TO AA 6/SD S/WELDS (CRT)

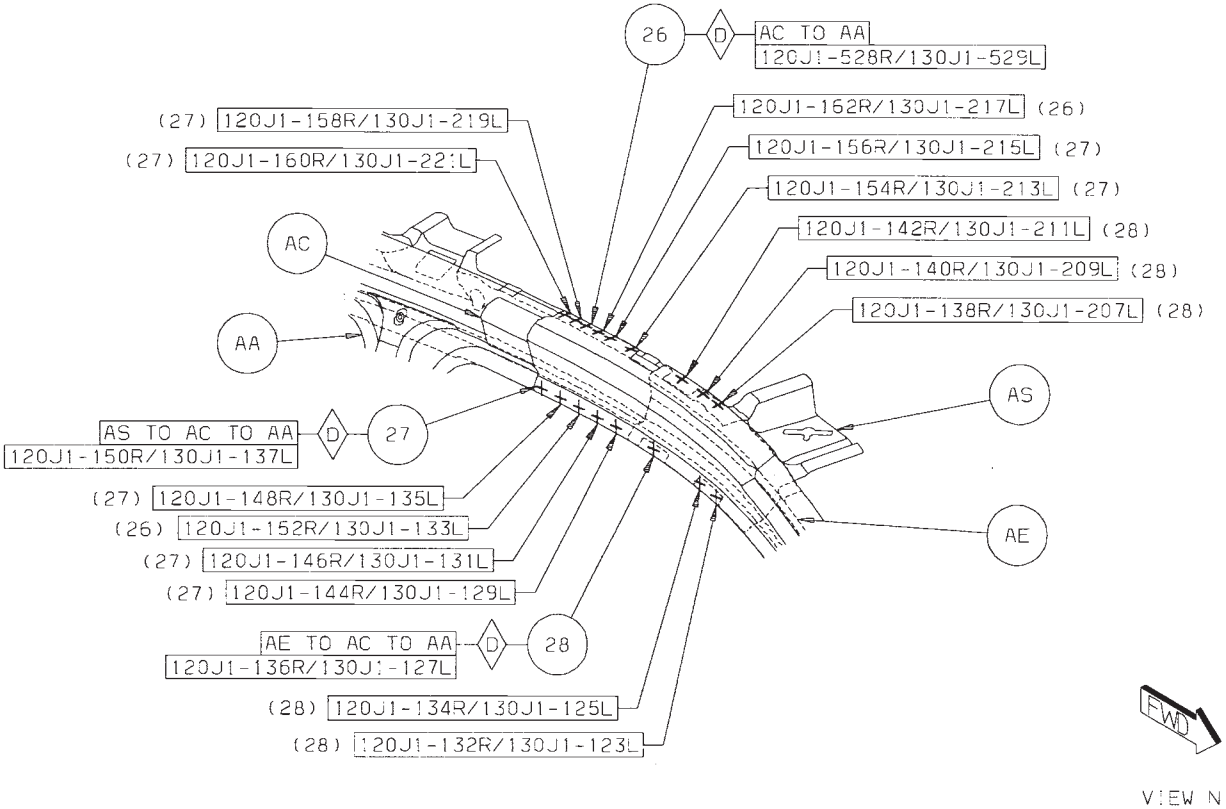

Back to Index

29 AE TO AC TO AA 29/SD S/WELDS (CRT)
30 AC TO AA 2/SD S/WELDS (CRT)
31 AC TO AE 3/SD S/WELDS (CRT)

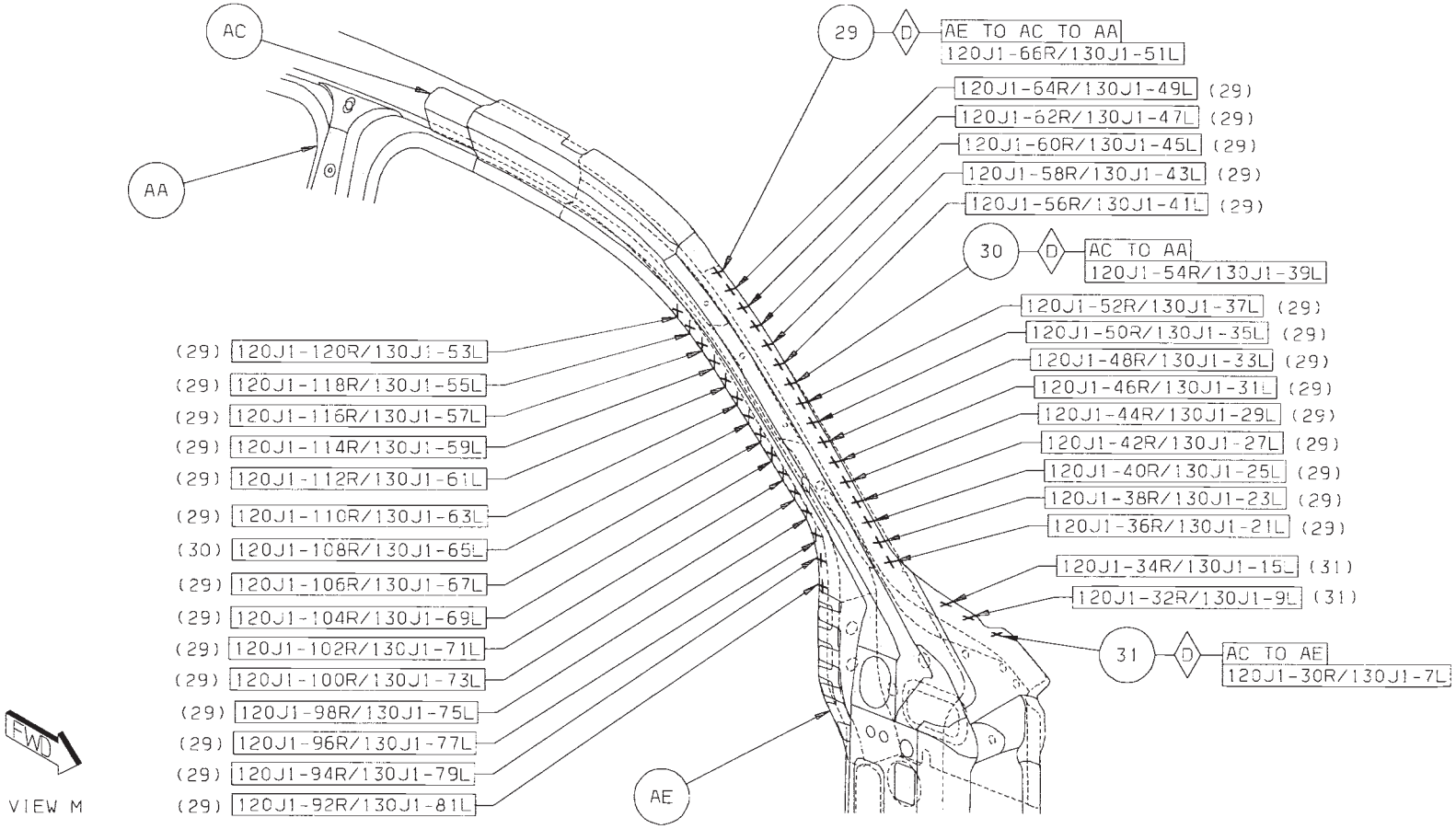

Back to Index

32 AC TO AA 20/SD S/WELDS (CRT)
33 AC TO AB TO AA 4/SD S/WELDS (CRT)

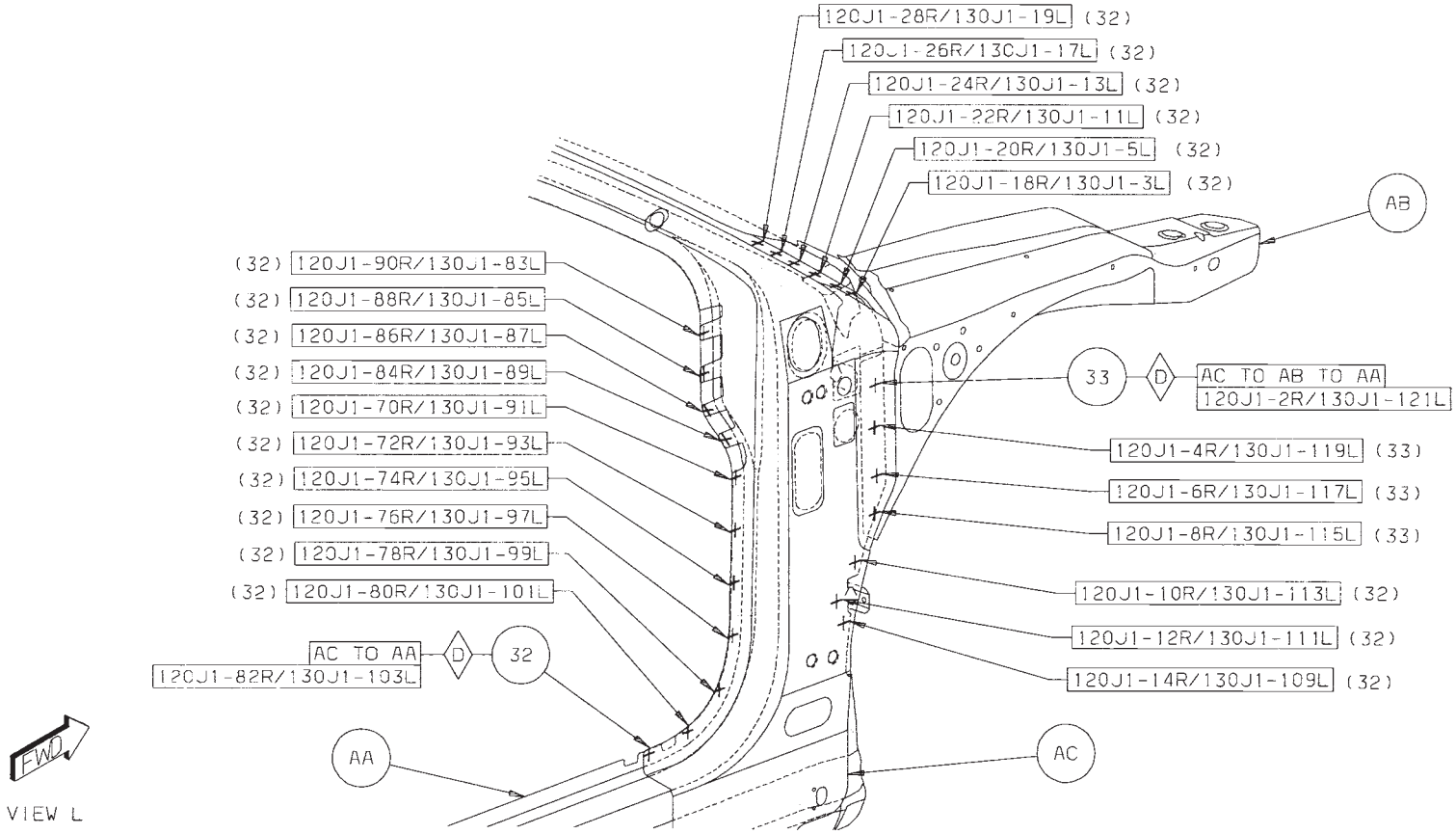

Back to Index

CHRYSLER SEBRING BODY SIDE APERTURE COMPLETE SECTION

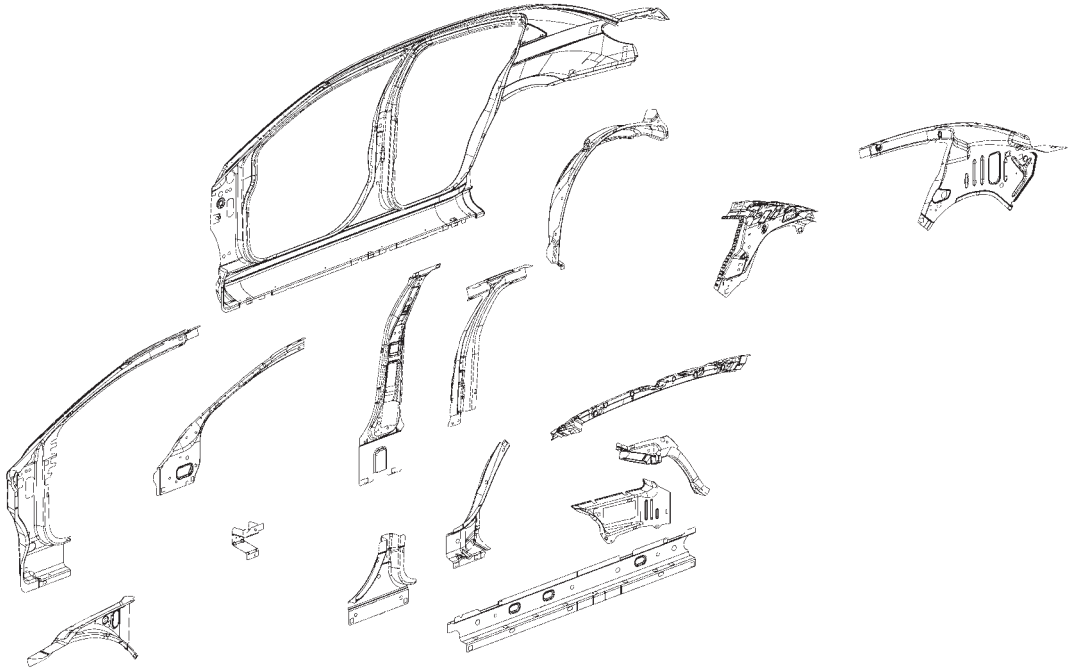

AA PANEL – BODY SIDE APERTURE RT –
AA PANEL – BODY SIDE APERTURE LT –
AB PANEL – HINGE PILLAR RT –
AB PANEL – HINGE PILLAR LT –
AC PANEL – UPR LOAD PATH OTR RT –
AC PANEL – UPR LOAD PATH OTR LT –
AD FRAME – WINDSHIELD OPENING SIDE INR –
AE RAIL – ROOF SIDE INR RT –
AE RAIL – ROOF SIDE INR LT –
AF PANEL – QTR INR UPR RT –
AF PANEL – QTR INR UPR LT –
AG PANEL – RR OTR RT –
AG PANEL – RR OTR LT –
AH PANEL – B-PILLAR RT –
AH PANEL – B-PILLAR LT –
AJ PANEL – B-PILLAR INR RT –
AJ PANEL – B-PILLAR INR LT –
AK SILL – OTR RT –
AK SILL – OTR LT –
AL REINF – C-PILLAR LWR RT –
AL REINF – C-PILLAR LWR LT –
AM EXTENSION – QTR PANEL LWR RT –
AM EXTENSION – QTR PANEL LWR LT –
AN PANEL – RR WHEELHOUSE OTR RT –
AP EXTENSION – BODY SIDE RT –
AP EXTENSION – BODY SIDE LT –
AR REINF – B-PILLAR LWR & SILL RT –
AR REINF – B-PILLAR LWR & SILL LT –
AS THROUGH – QTR OTR PANEL DRAIN RT –
AS THROUGH – QTR OTR PANEL DRAIN LT –

Back to Index

PARTS IDENTIFICATION LEGEND, OVERVIEW 32

AA PANEL – BODY SIDE APERTURE RT –
AA PANEL – BODY SIDE APERTURE LT –
AB PANEL – HINGE PILLAR RT –
AB PANEL – HINGE PILLAR LT –
AC PANEL – UPR LOAD PATH OTR RT –
AC PANEL – UPR LOAD PATH OTR LT –
AD FRAME – WINDSHIELD OPENING SIDE INR –
AE RAIL – ROOF SIDE INR RT –
AE RAIL – ROOF SIDE INR LT –
AF PANEL – QTR INR UPR RT –
AF PANEL – QTR INR UPR LT –
AG PANEL – RR OTR RT –
AG PANEL – RR OTR LT –
AH PANEL – B-PILLAR RT –
AH PANEL – B-PILLAR LT –
AJ PANEL – B-PILLAR INR RT –
AJ PANEL – B-PILLAR INR LT –
AK SILL – OTR RT –
AK SILL – OTR LT –
AL REINF – C-PILLAR LWR RT –
AL REINF – C-PILLAR LWR LT –
AM EXTENSION – QTR PANEL LWR RT –
AM EXTENSION – QTR PANEL LWR LT –
AN PANEL – RR WHEELHOUSE OTR RT –
AP EXTENSION – BODY SIDE RT –
AP EXTENSION – BODY SIDE LT –
AR REINF – B-PILLAR LWR & SILL RT –
AR REINF – B-PILLAR LWR & SILL LT –
AS THROUGH – QTR OTR PANEL DRAIN RT –
AS THROUGH – QTR OTR PANEL DRAIN LT –

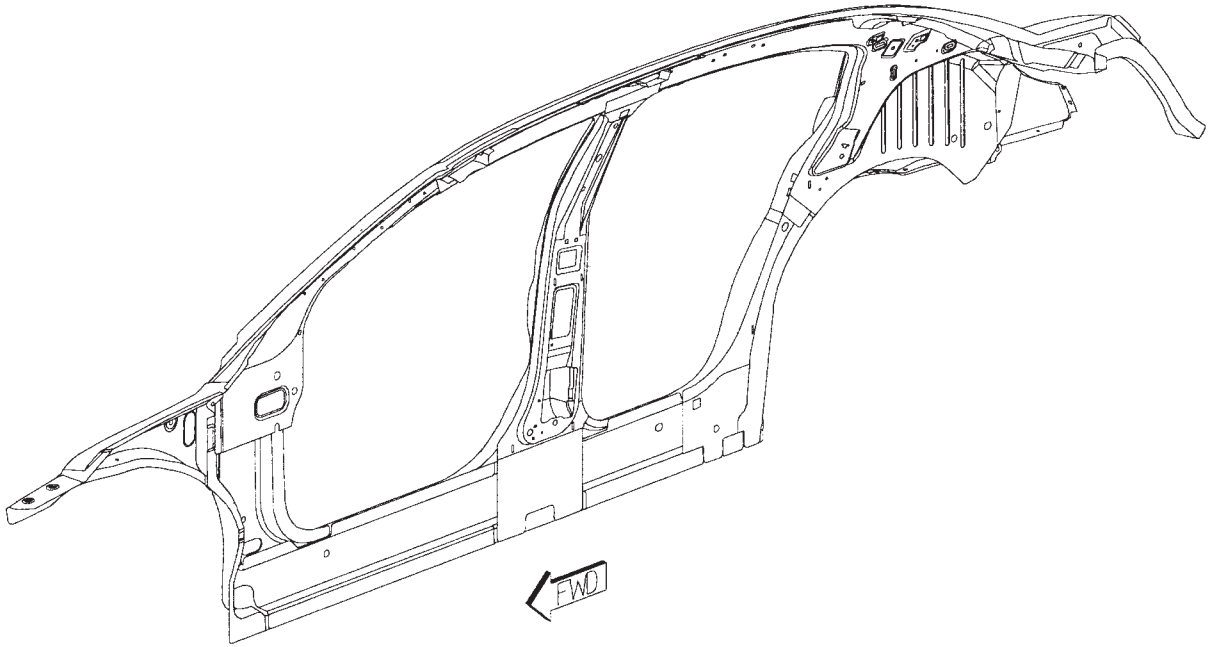

Back to Index

WELD LAYOUT LOCATION GUIDE

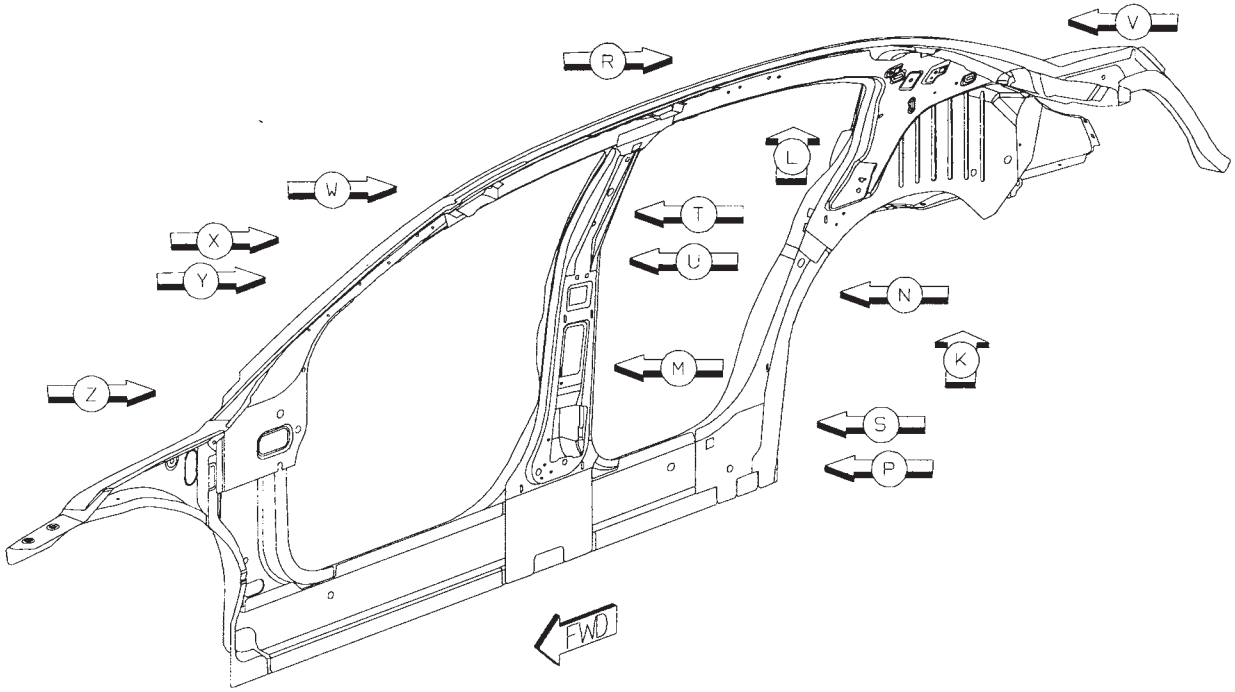

Back to Index

01 AB TO AA 20/SD S/WELDS (ORD)
02 AC TO AB TO AD 4/SD S/WELDS (ORD)

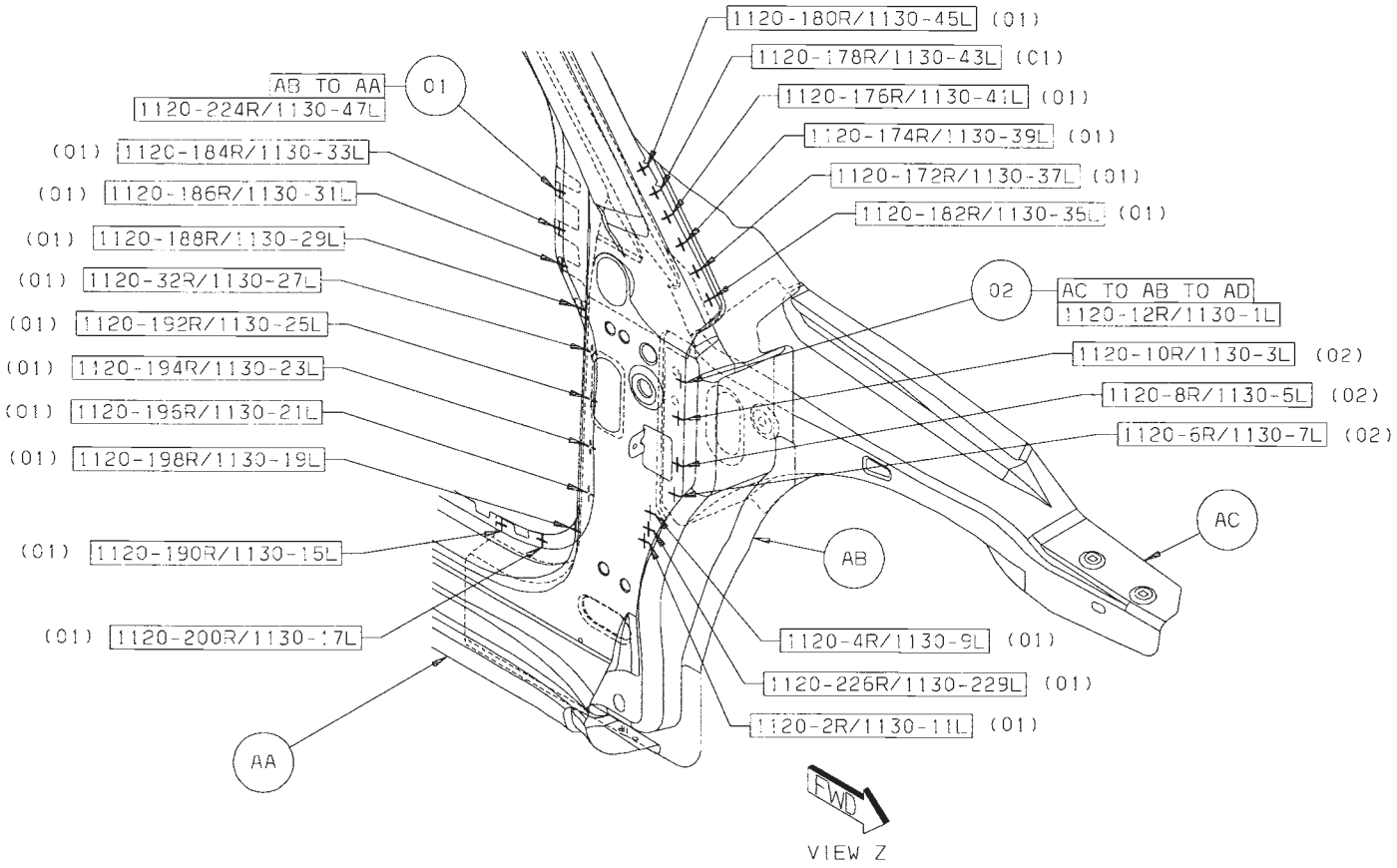

Back to Index

03 AB TO AA 6/SD S/WELDS (ORD)
04 AD TO AB TO AA 16/SD S/WELDS (ORD)
05 AB TO AA 3/SD S/WELDS (ORD)

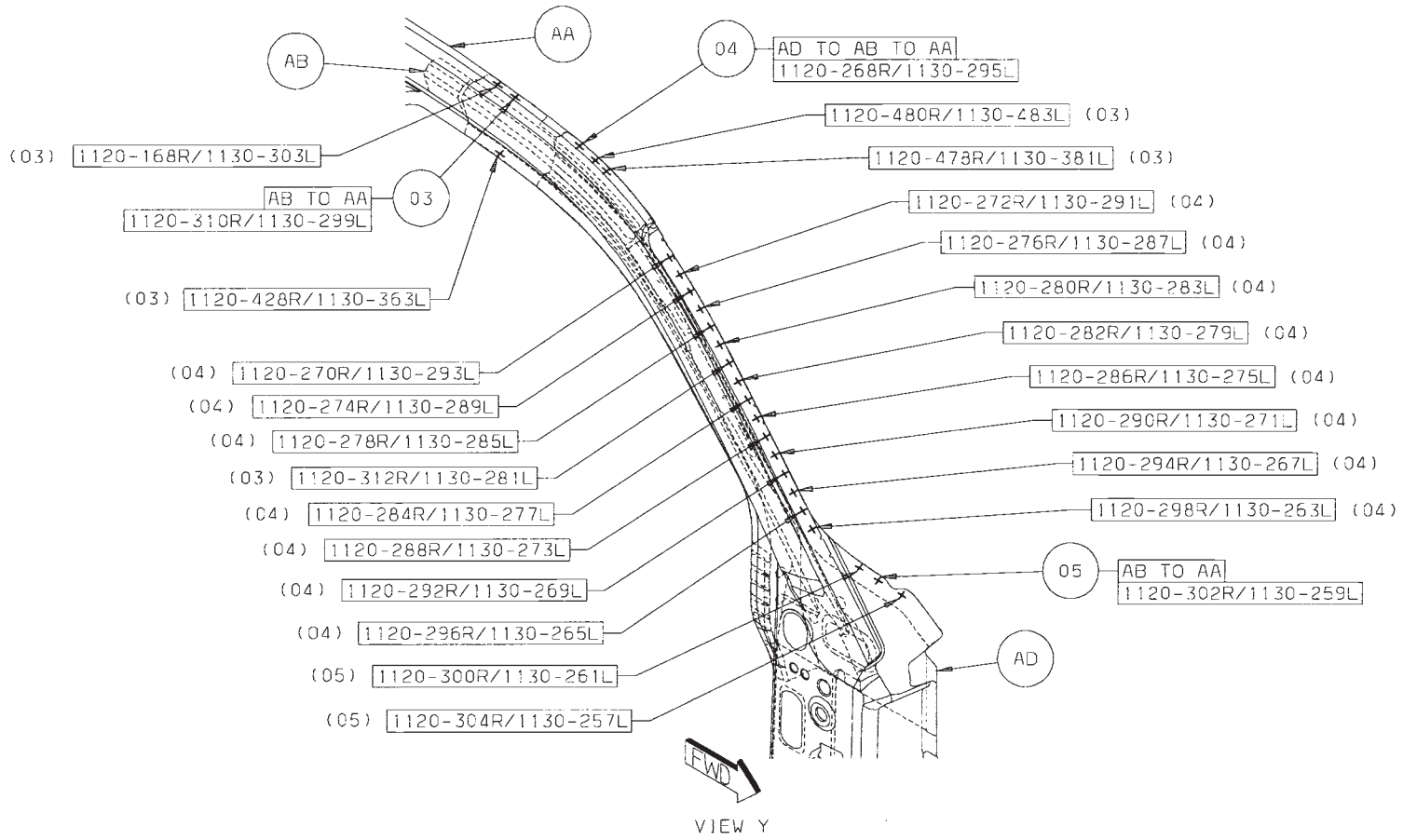

Back to Index

06 AD TO AB TO AA 18/SD S/WELDS (ORD)
07 AE TO AB TO AA 8/SD S/WELDS (ORD)

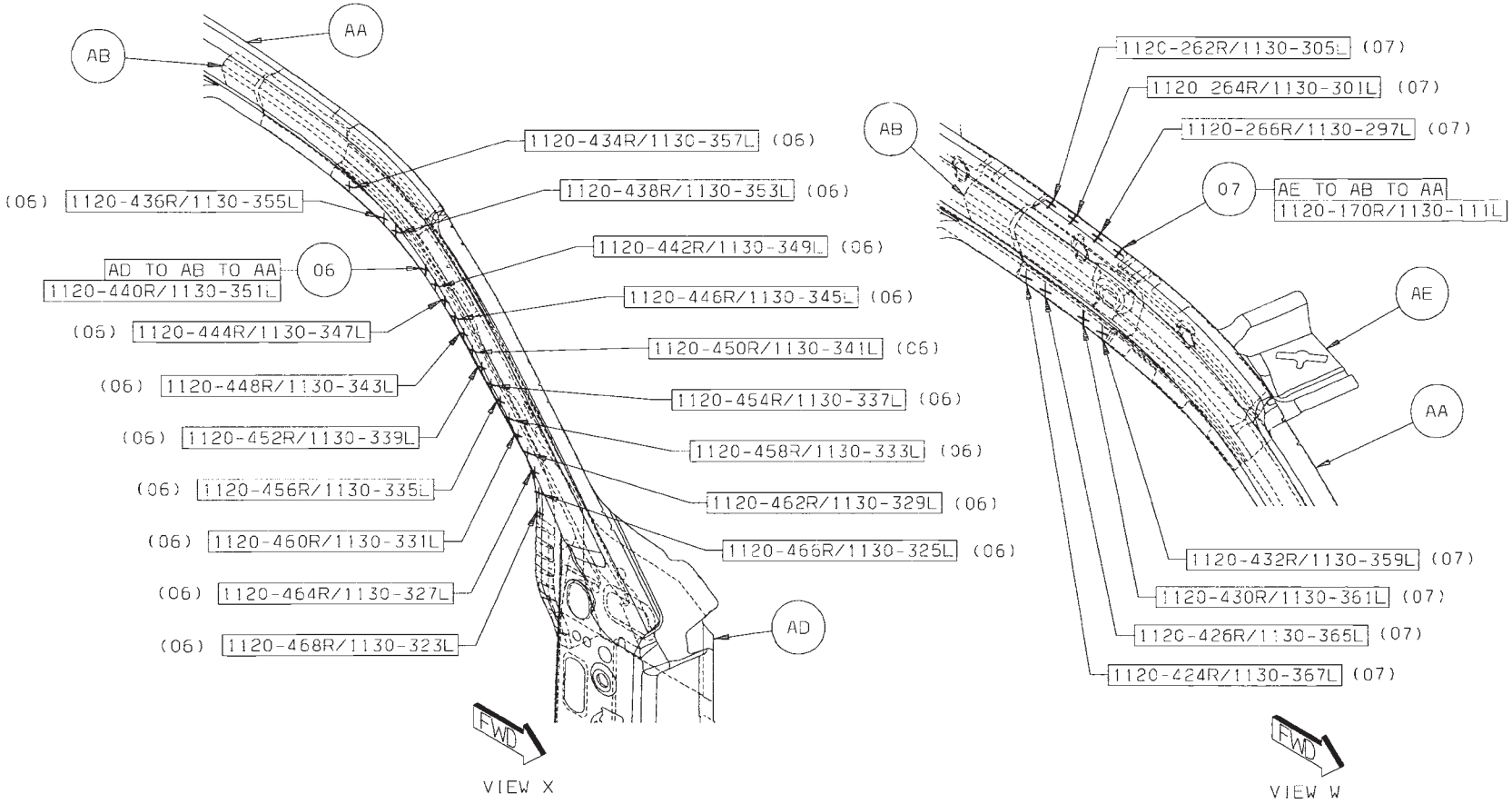

Back to Index

08 AG TO AF TO AA 21/SD S/WELDS (ORD)

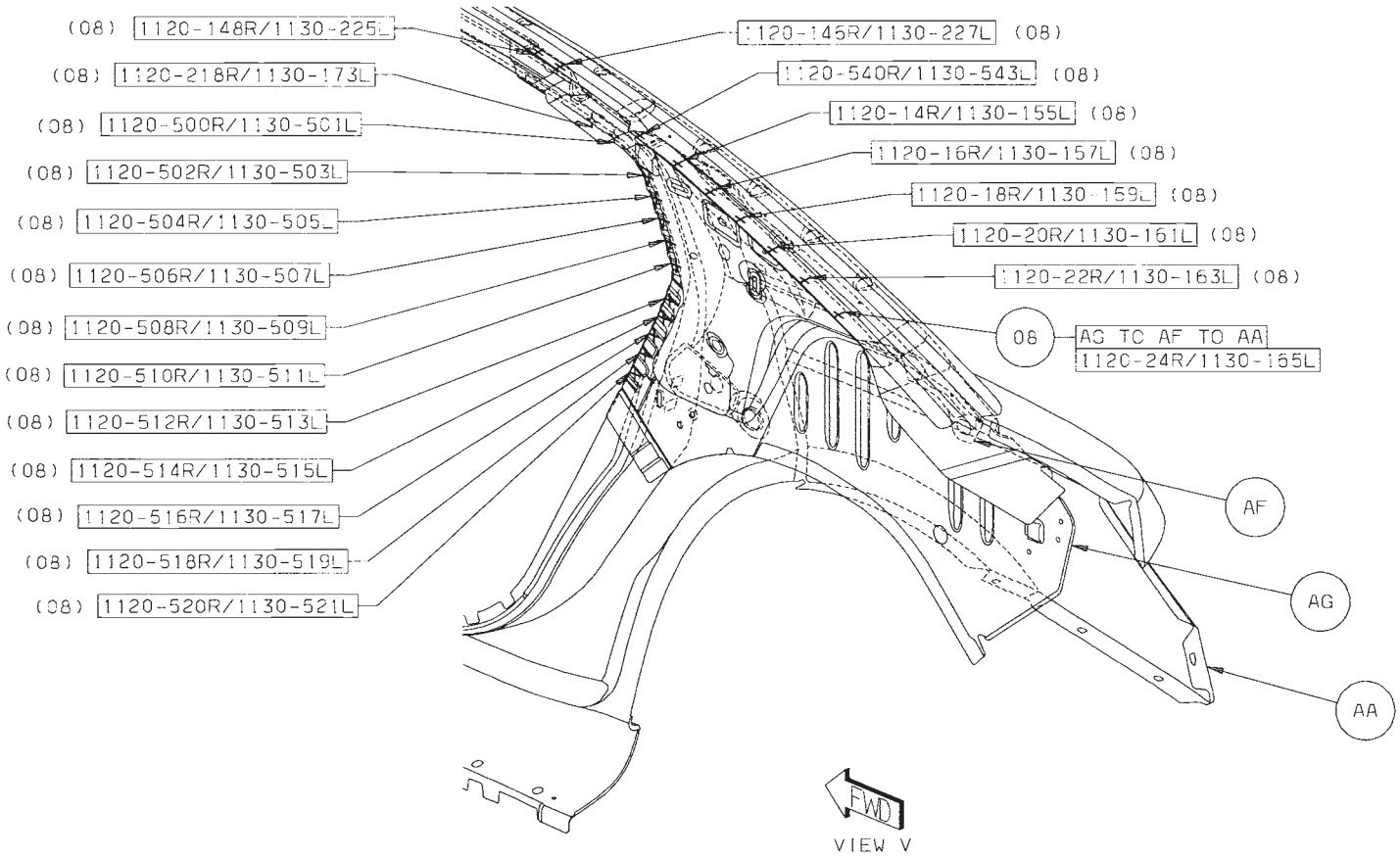

Back to Index

09 AJ TO AH TO AA 6/SD S/WELDS (SAF)
10 AH TO AA 4/SD S/WELDS (ORD)
11 AJ TO AH TO AA 13/SD S/WELDS (ORD)

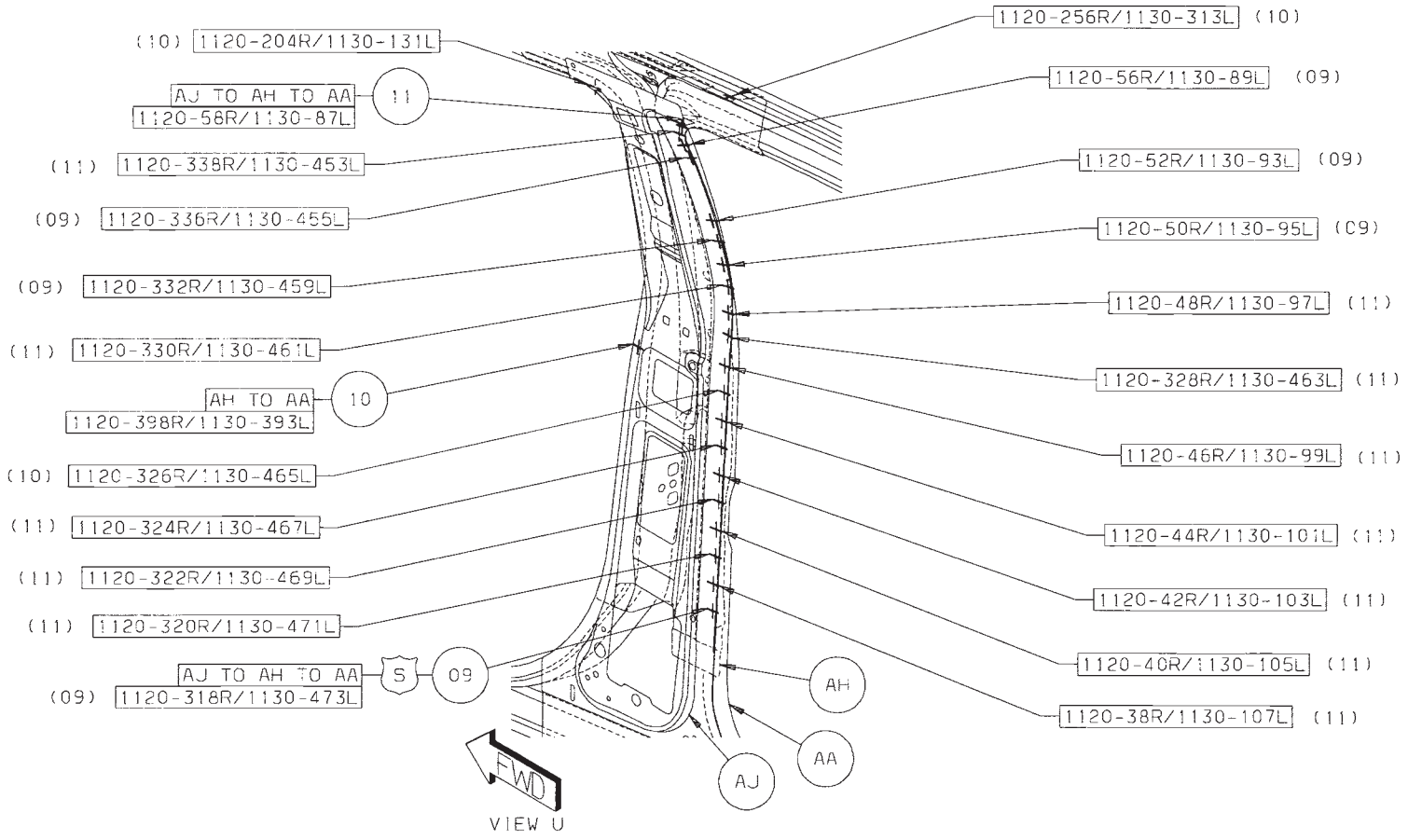

Back to Index

12 AJ TO AH TO AA 11/SD S/WELDS (ORD)
13 AH TO AA 1/SD S/WELD (SAF)
14 AJ TO AH TO AA 5/SD S/WELDS (SAF)
15 AJ TO AH TO AA 6/SD S/WELDS (DIA)

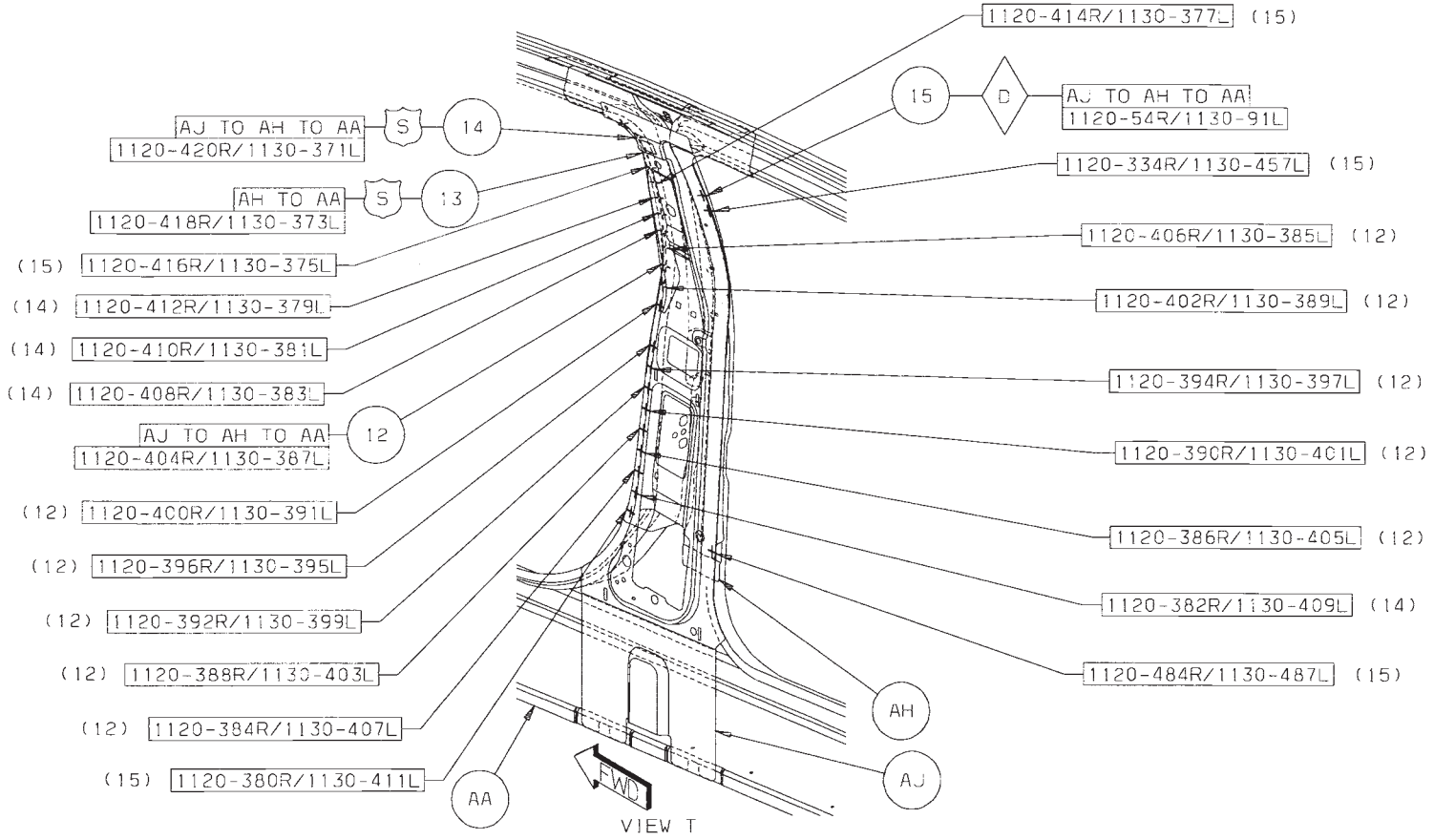

Back to Index

16 AJ TO AK TO AA 4/SD S/WELDS (ORD)
17 AK TO AB TO AA 2/SD S/WELDS (ORD)
18 AK TO AA 15/SD S/WELDS (ORD)
19 AL TO AK TO AA 2/SD S/WELDS (ORD)

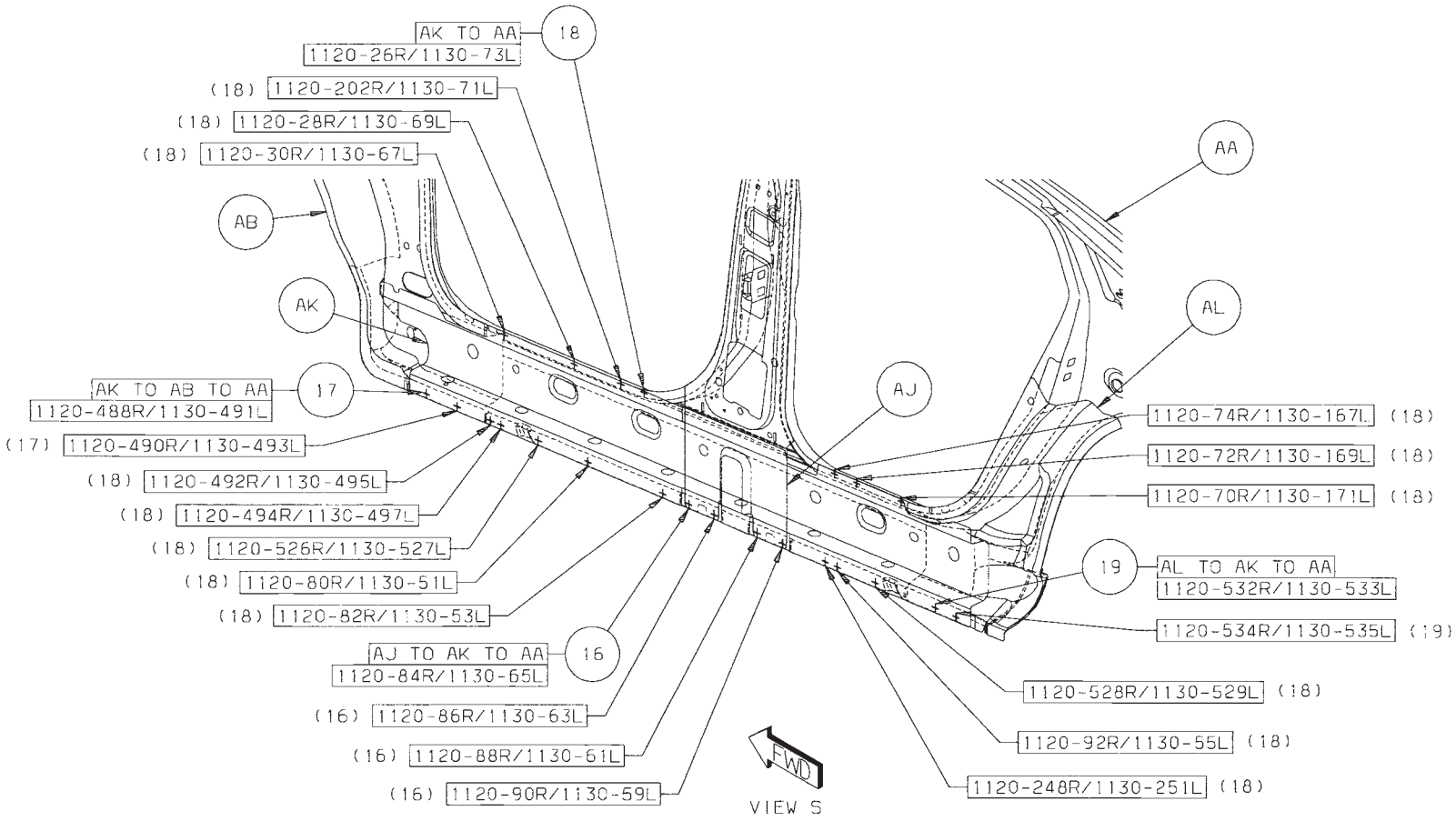

Back to Index

20 AG TO AE TO AA 17/SD S/WELDS (ORD)
21 AG TO AA 4/SD S/WELDS (ORD)
22 AH TO AE TO AA 15/SD S/WELDS (ORD)

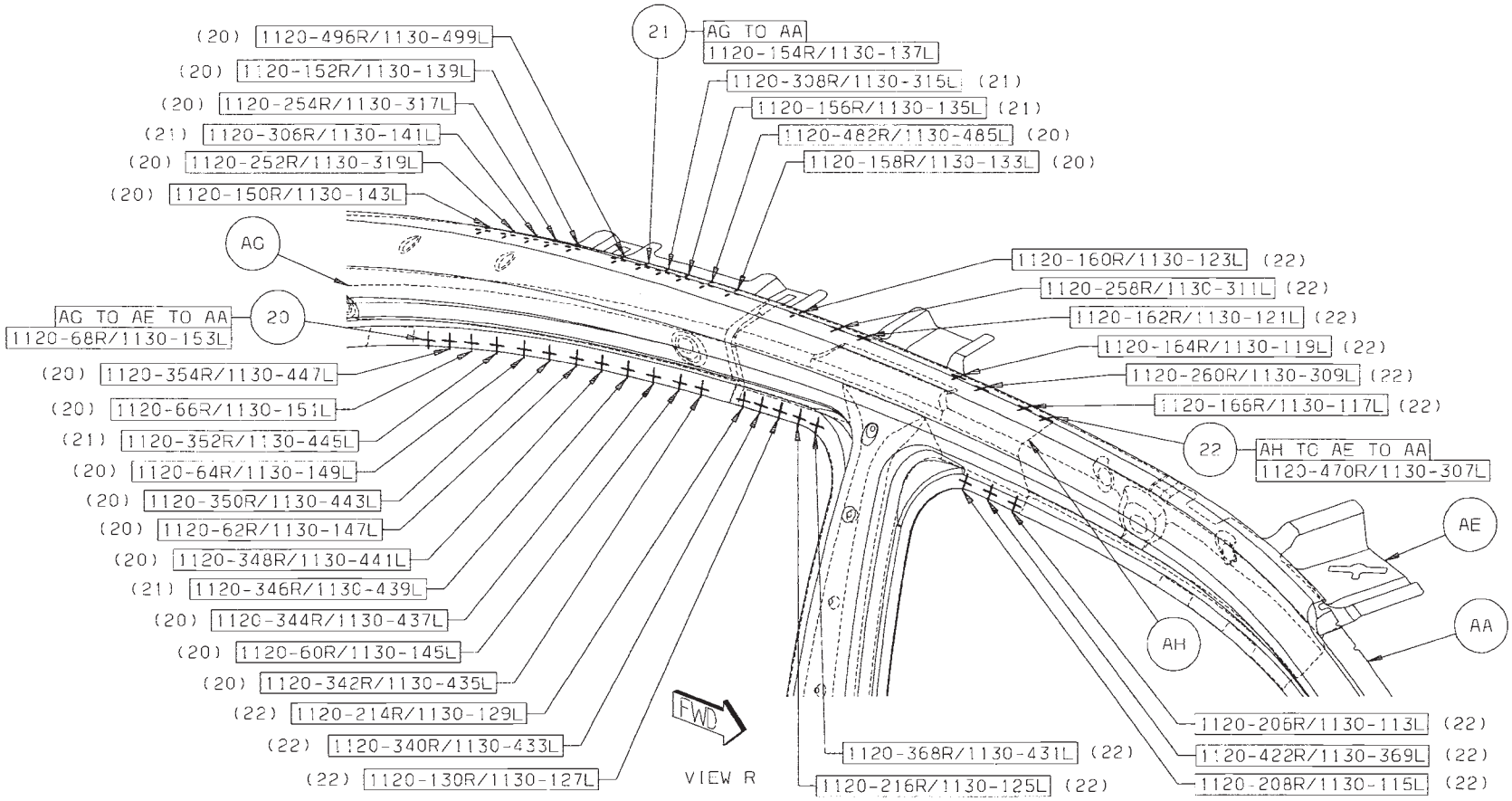

Back to Index

23 AL TO AA 2/SD S/WELDS (ORD)
24 AM TO AL TO AA 12/SD S/WELDS (ORD)

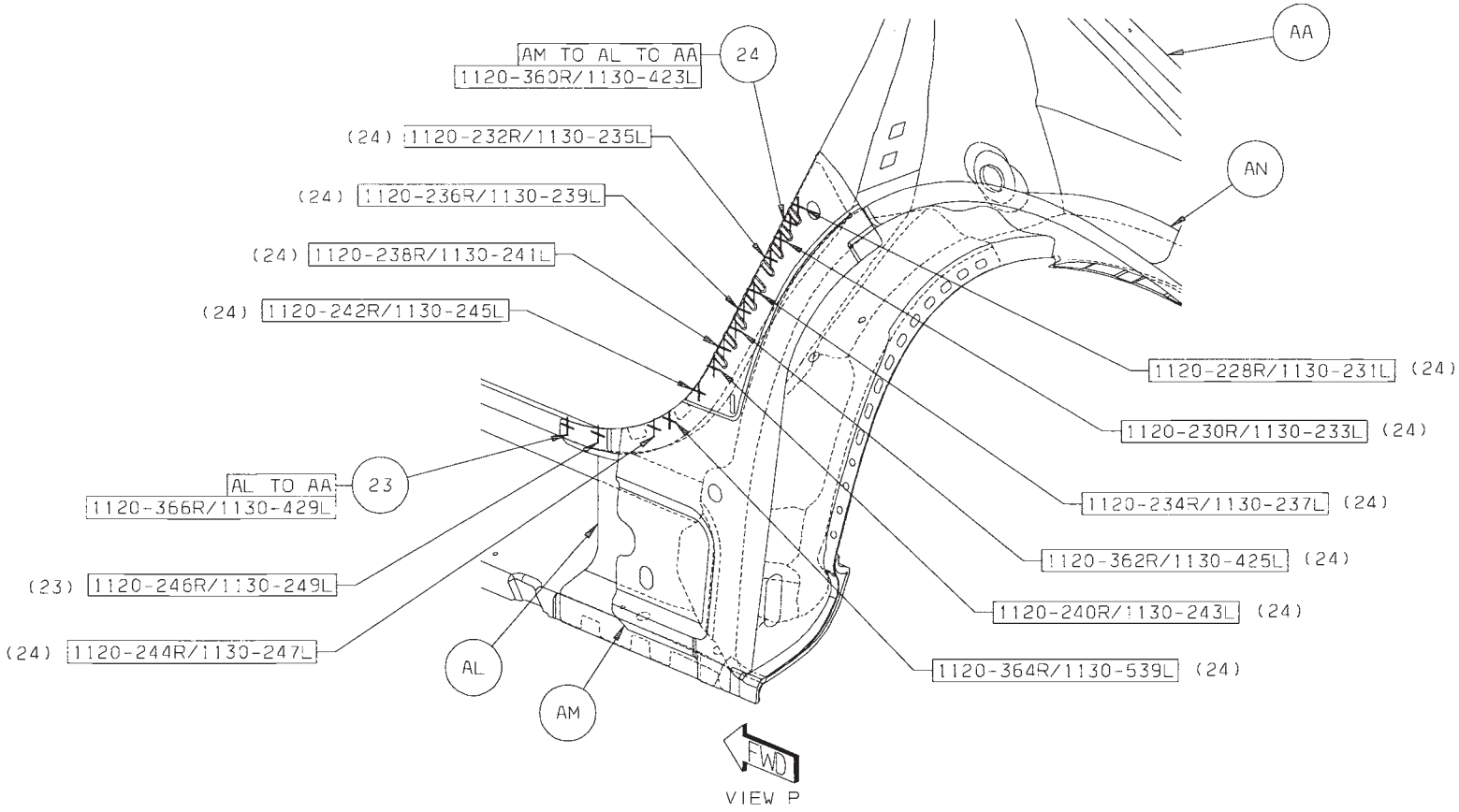

Back to Index

25 AM TO AA 1/SD S/WELD (ORD)
26 AN TO AL TO AA 9/SD S/WELDS (ORD)
27 AN TO AA 12/SD S/WELDS (ORD)
28 AP TO AN 2/SD S/WELDS (ORD)

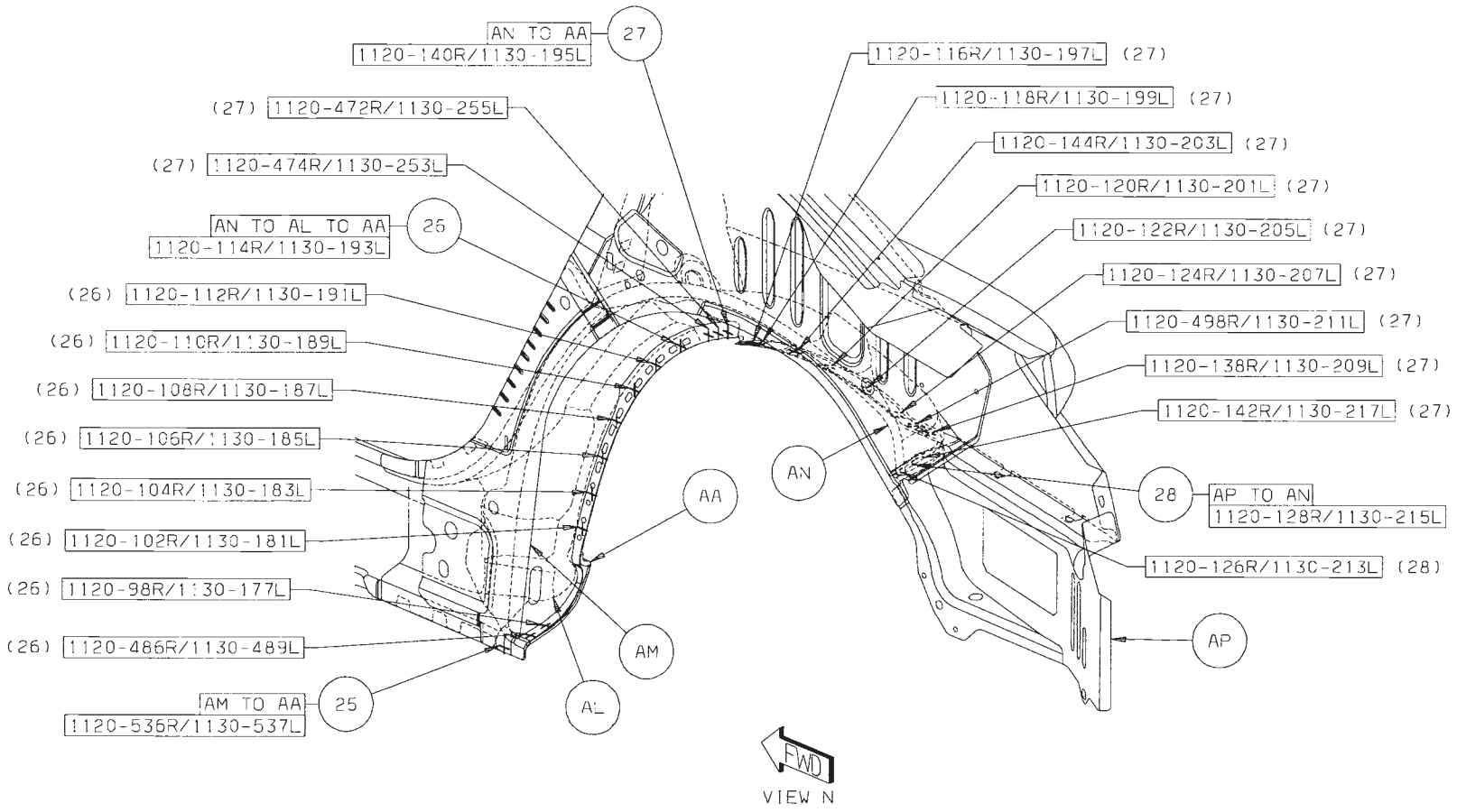

Back to Index

29 AR TO AA 6/SD S/WELDS (ORD)
30 AR TO AJ TO AA 2/SD S/WELDS (SAF)
31 AR TO AJ TO AA 3/SD S/WELDS (DIA)
32 AR TO AJ TO AA 2/SD S/WELDS (ORD)

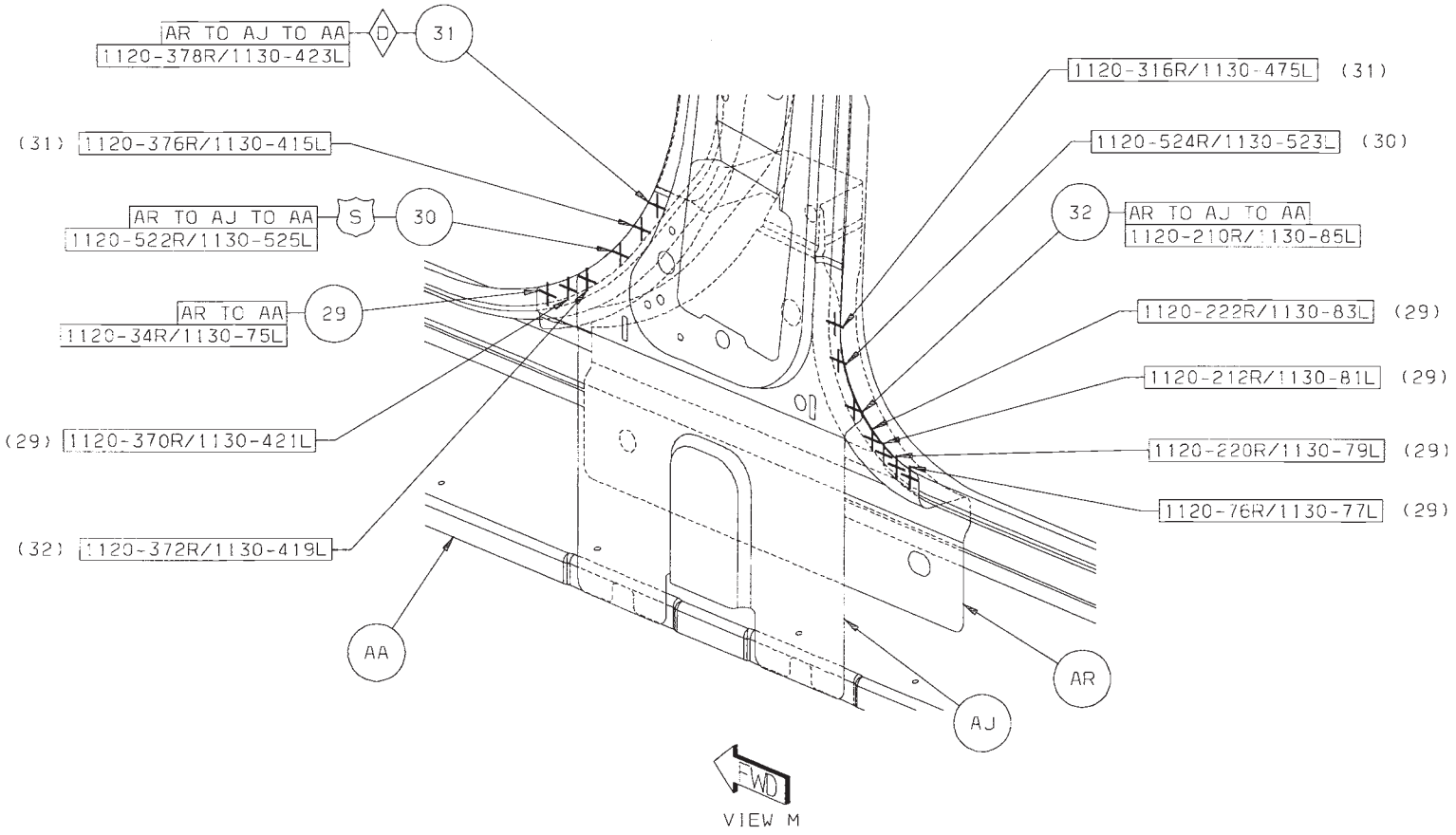

Back to Index

33 AF TO AA 1/SD S/WELD (ORD)
34 AF TO AE TO AA 2/SD S/WELDS (ORD)
35 AF TO AE 1 STRUC ADH
36 AS TO AG 3/SD S/WELDS (ORD)

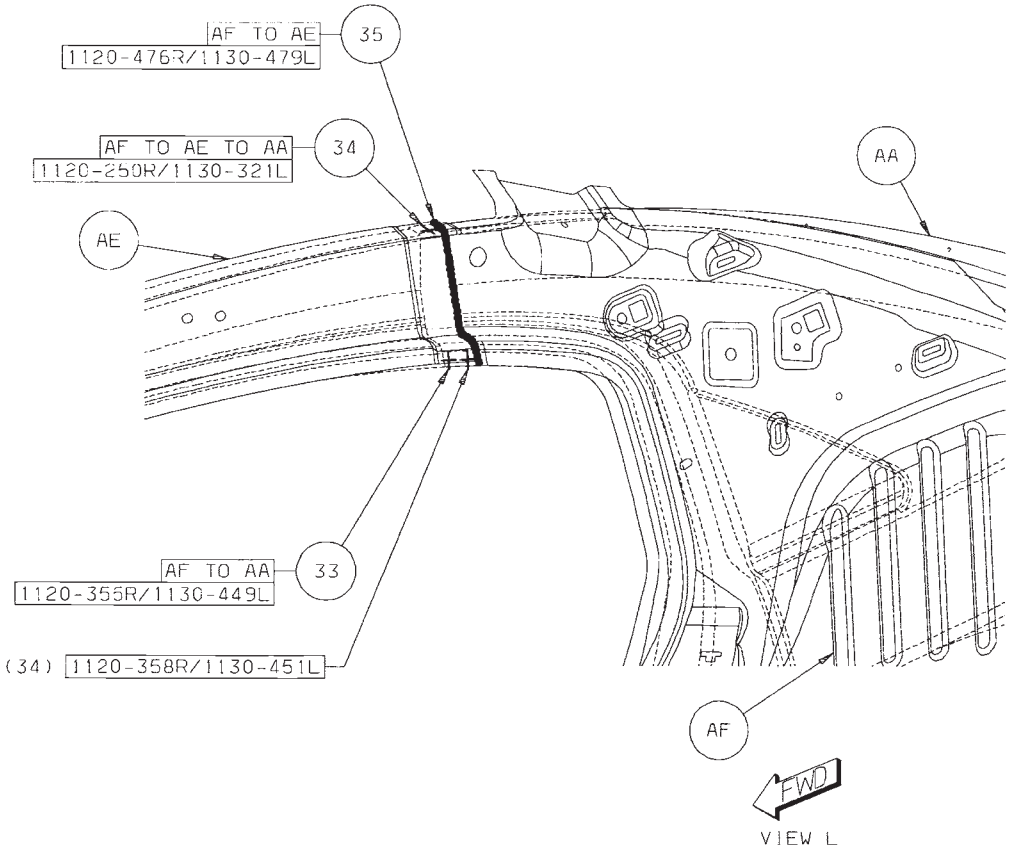

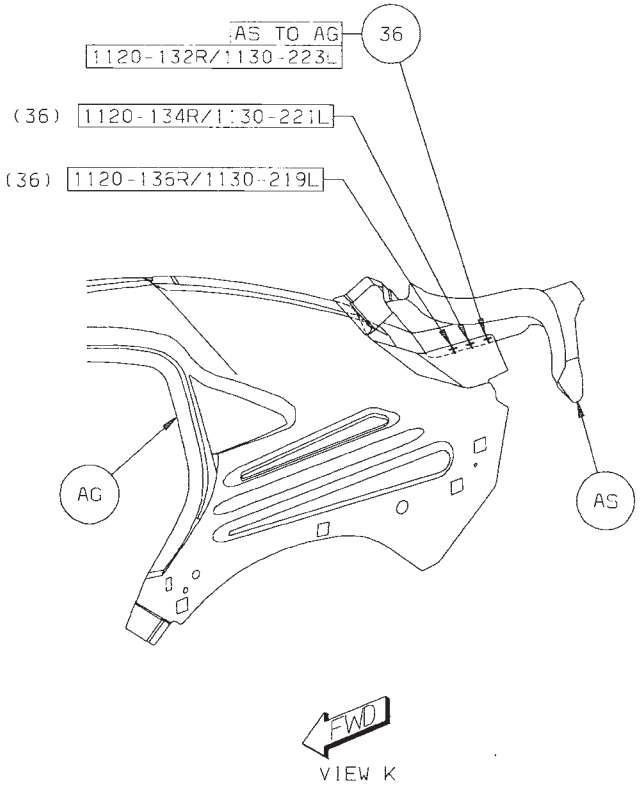

Back to Index

CHRYSLER SEBRING BODY SIDE APERTURE INNER SECTION

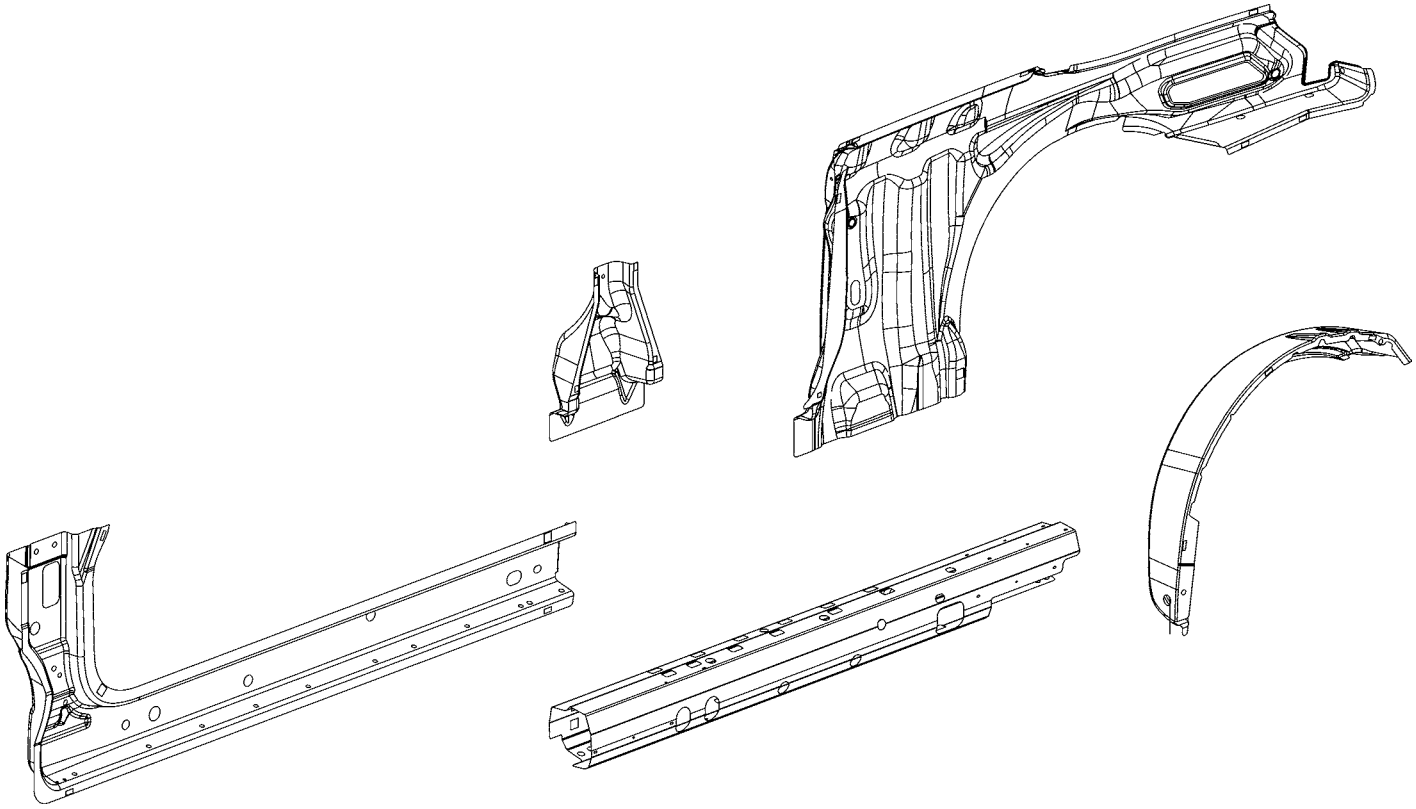

AA REINF – BODY SIDE SILL OTR RT –
AA REINF – BODY SIDE SILL OTR LT –
AB BEAM – UPR LOAD PATH OTR RT –
AB BEAM – UPR LOAD PATH OTR LT –
AC REINF – QTR OTR PANEL FRT RT –
AC REINF – QTR OTR PANEL FRT LT –
AD GUSSET – IMPACT BODY SIDE SILL –
AD GUSSET – IMPACT BODY SIDE SILL –
AE PANEL – RR WHEELHOUSE OTR RT –
AE PANEL – RR WHEELHOUSE OTR RR RT –
AF REINF – B-PILLAR INR RT –
AF REINF – B-PILLAR INR LT –
AG FILLER – DRAIN TROUGH – RT
AG FILLER – DRAIN TROUGH – LT

Back to Index

PARTS IDENTIFICATION LEGEND, OVERVIEW 25

AA REINF – BODY SIDE SILL OTR RT –
AA REINF – BODY SIDE SILL OTR LT –
AB BEAM – UPR LOAD PATH OTR RT –
AB BEAM – UPR LOAD PATH OTR LT –
AC REINF – QTR OTR PANEL FRT RT –
AC REINF – QTR OTR PANEL FRT LT –
AD GUSSET – IMPACT BODY SIDE SILL –
AD GUSSET – IMPACT BODY SIDE SILL –
AE PANEL – RR WHEELHOUSE OTR RT –
AE PANEL – RR WHEELHOUSE OTR RR RT –
AF REINF – B-PILLAR INR RT –
AF REINF – B-PILLAR INR LT –
AG FILLER – DRAIN TROUGH – RT
AG FILLER – DRAIN TROUGH – LT

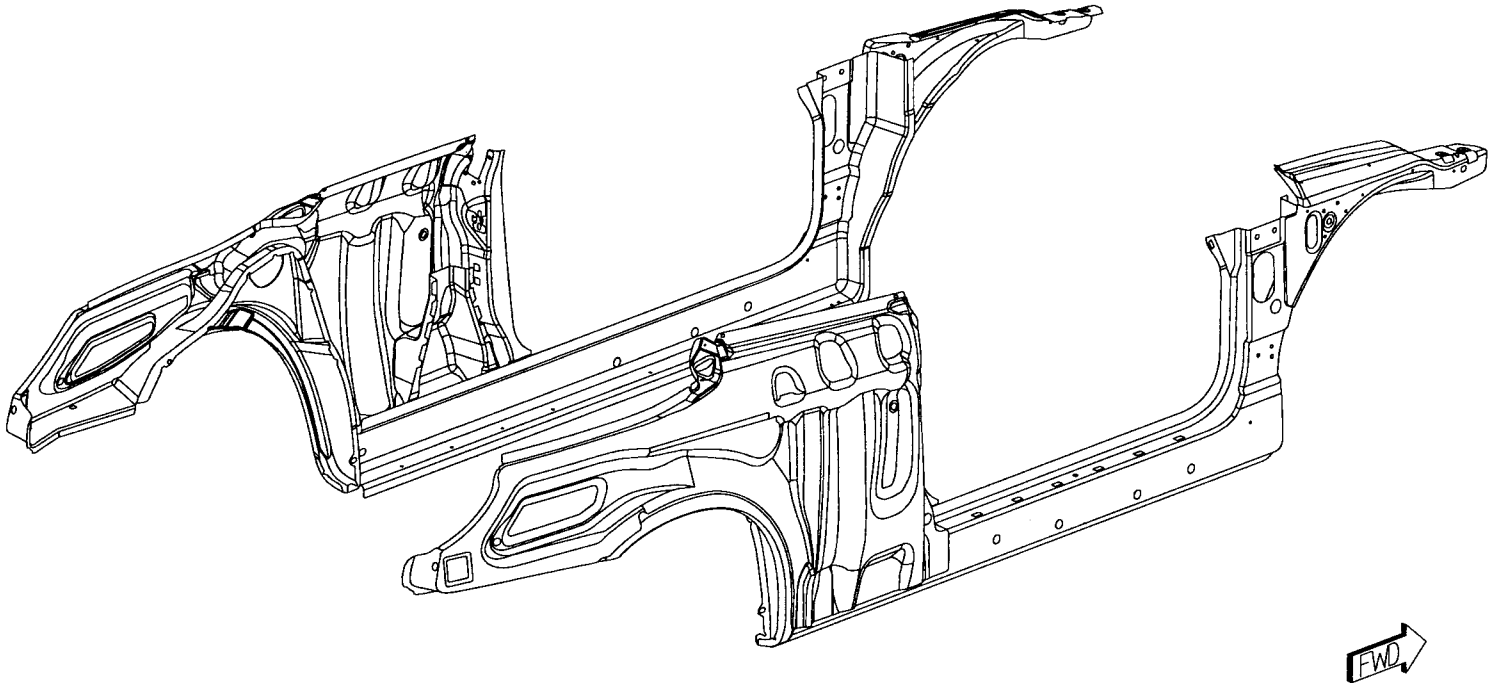

Back to Index

WELD LAYOUT LOCATION GUIDE

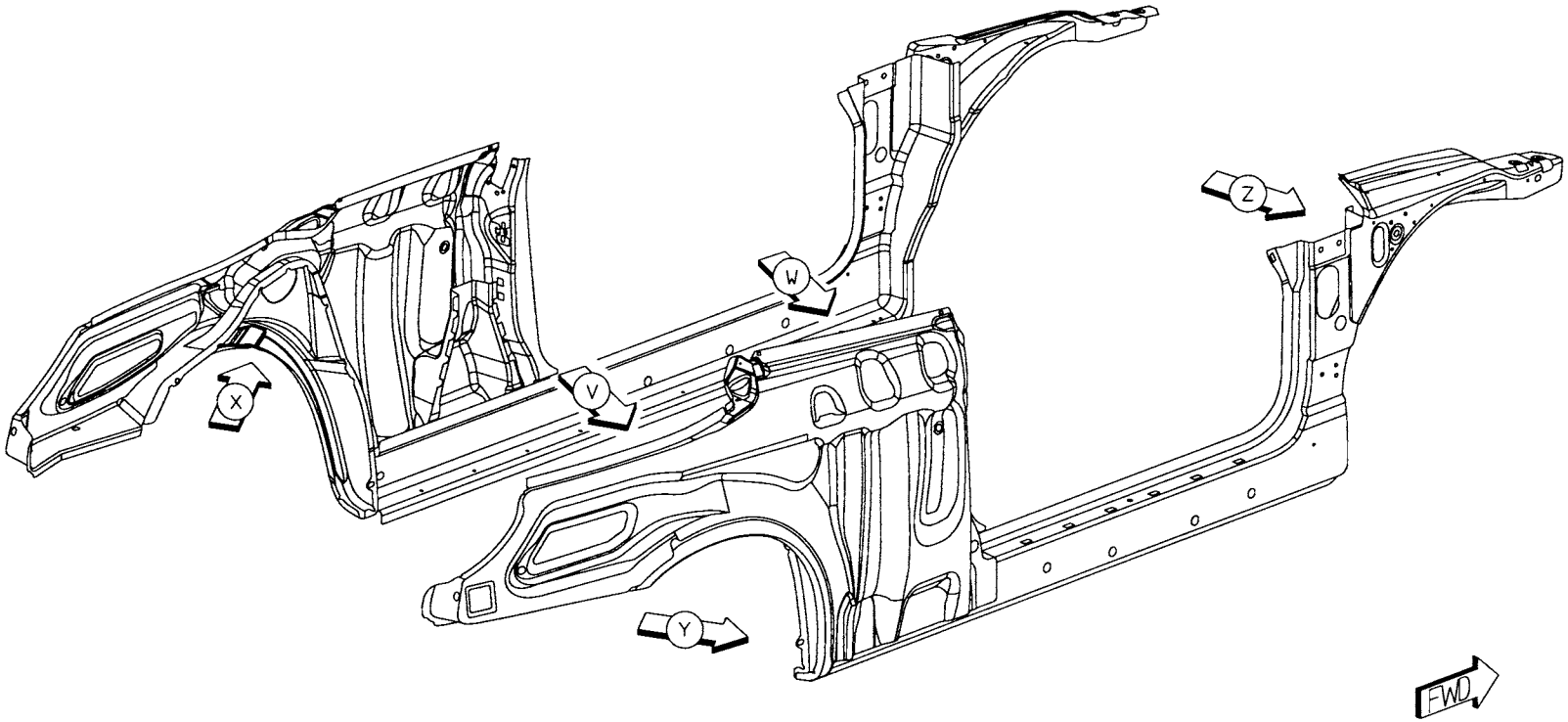

Back to Index

01 AB TO AA 1/SD S/WELD (DIA)
02 AB TO AA 4/SD S/WELDS (ORD)
03 AC TO AA 1 STRUC ADH
04 AC TO AA 1 STRUC ADH
05 AC TO AA 1 STRUC ADH
06 AC TO AA 1 STRUC ADH
07 AC TO AA 1 STRUC ADH
08 AC TO AA 1 STRUC ADH
09 AC TO AA 1 STRUC ADH
10 AC TO AA 11L S/WELDS (ORD)

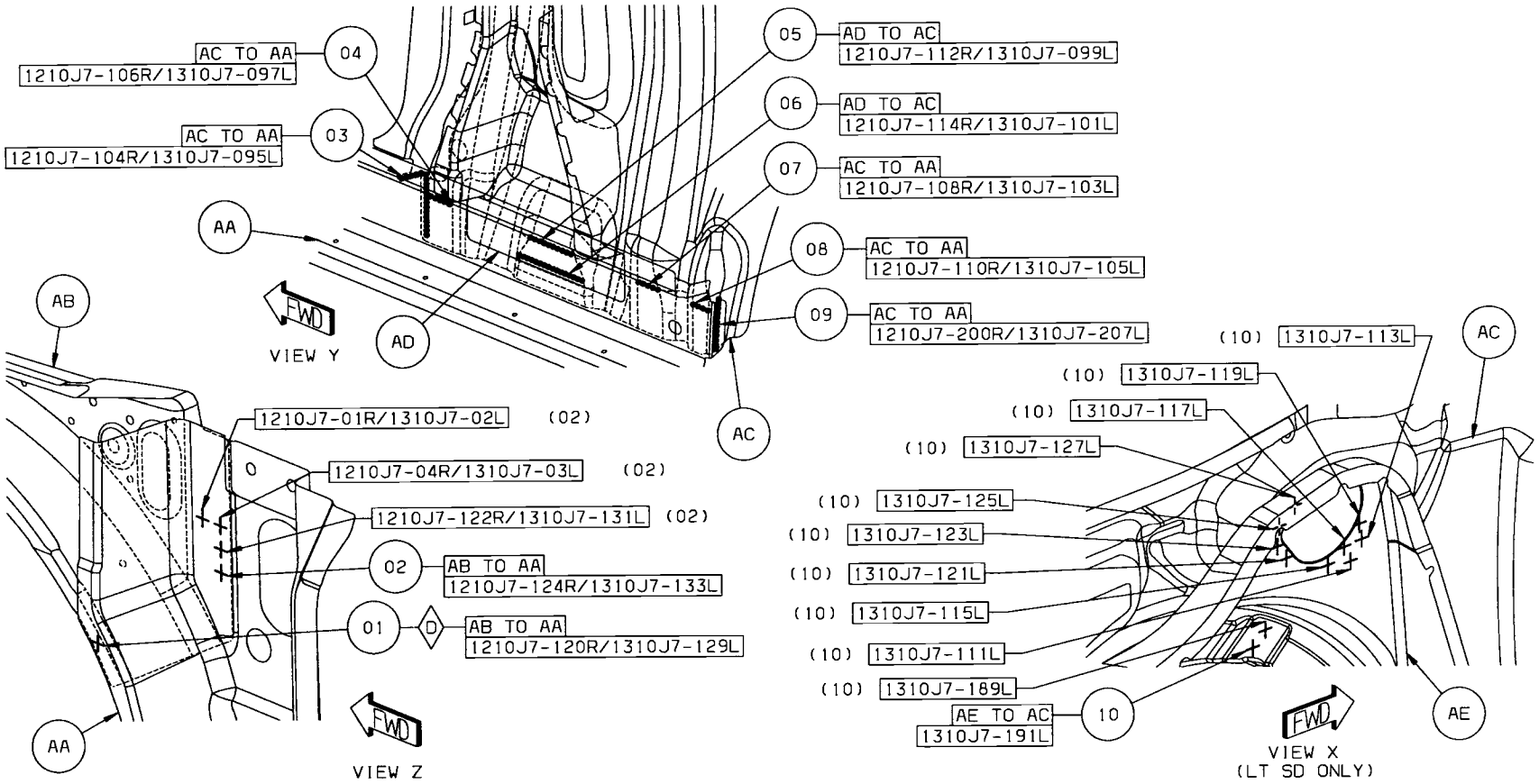

Back to Index

11 AC TO AA 16/SD S/WELDS (ORD)
12 AF TO AC 14/SD S/WELDS (ORD)
13 AG TO AC 2/SD S/WELDS (ORD)

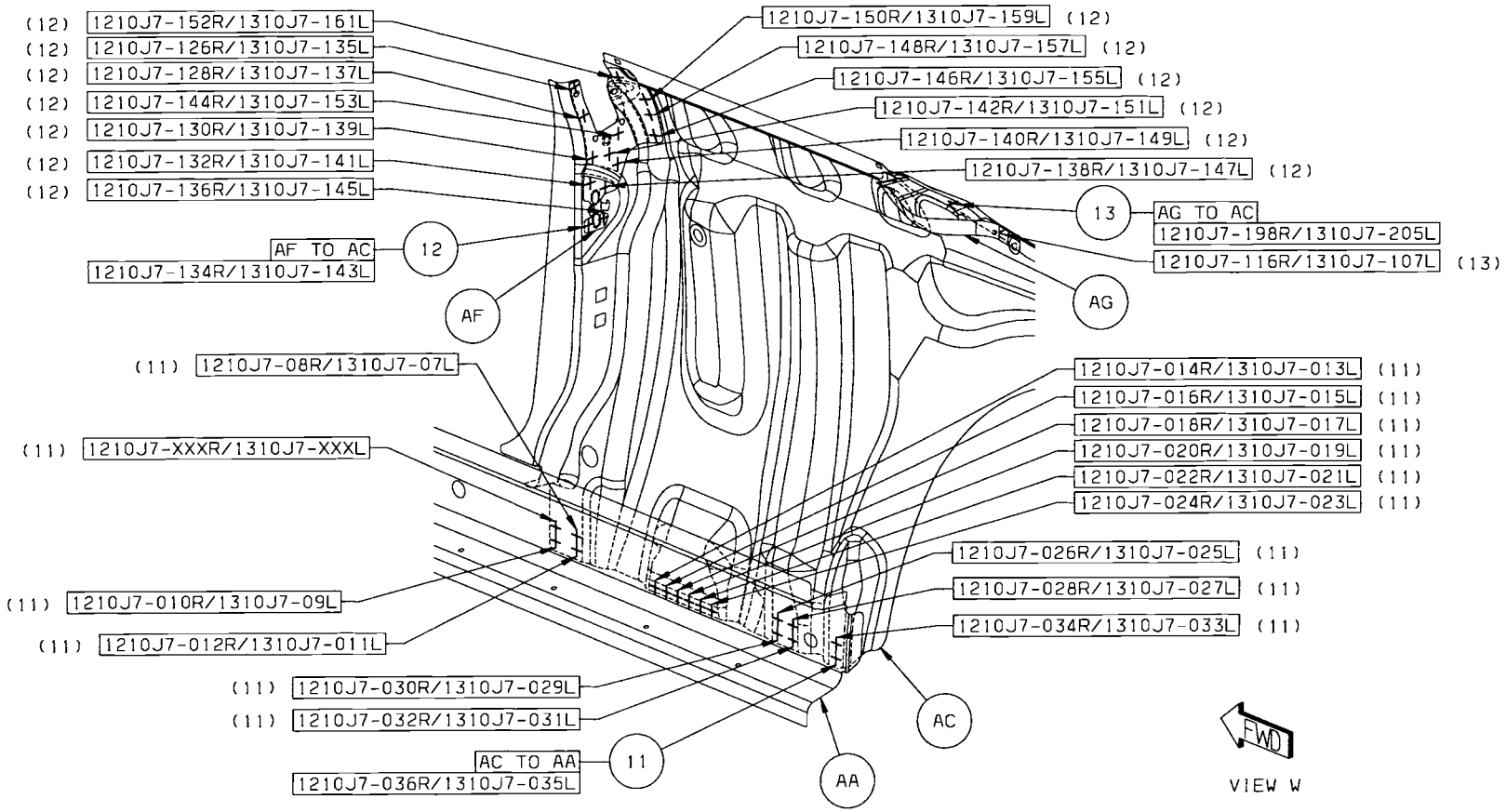

Back to Index

14 AE TO AC TO AA 2/SD S/WELDS (ORD)
15 AE TO AA 2/SD S/WELDS (ORD)
16 AE TO AC 28R/25L S/WELDS (ORD)

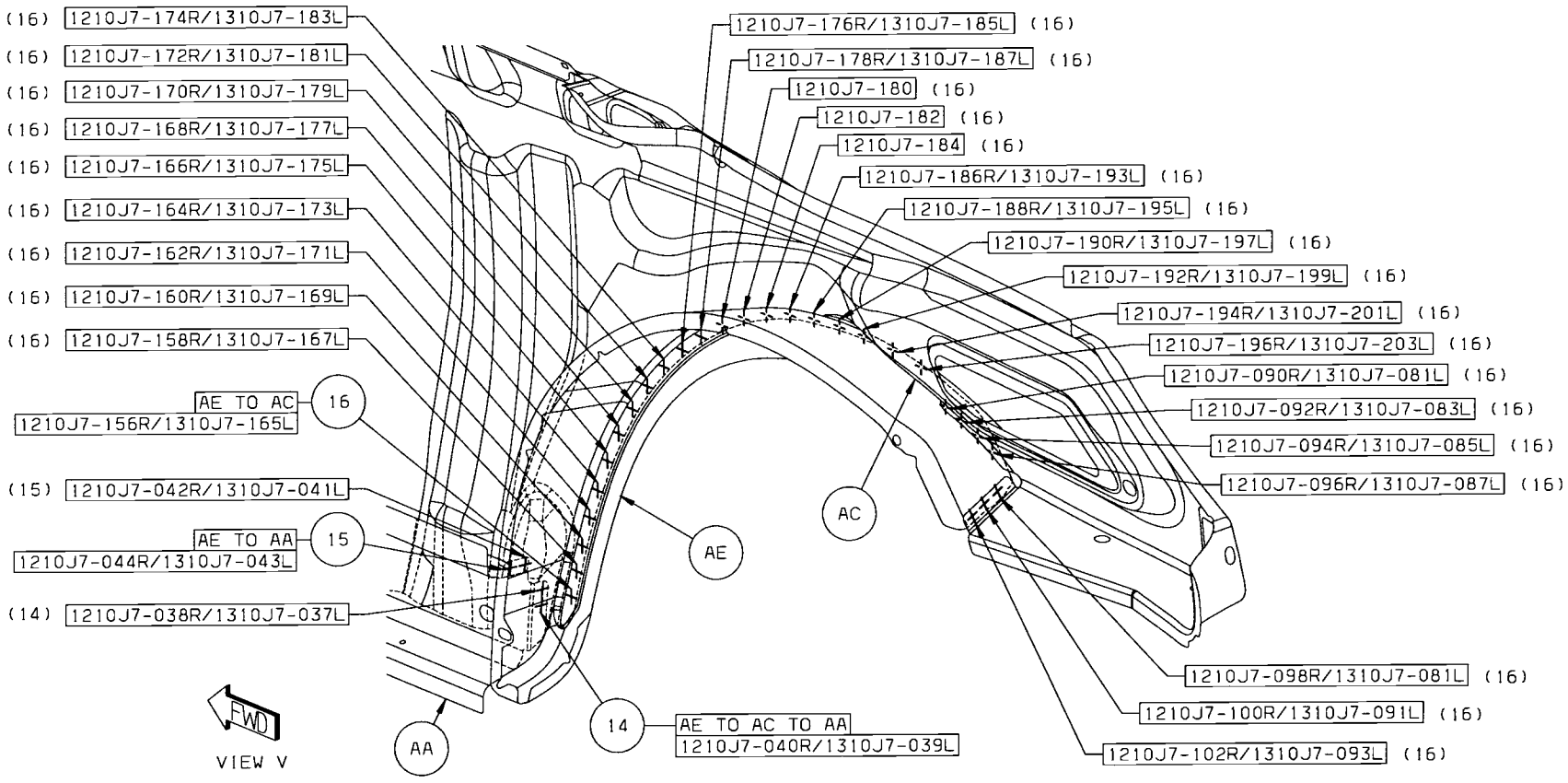

Back to Index

DODGE AVENGER BODY SIDE APERTURE INNER SECTION

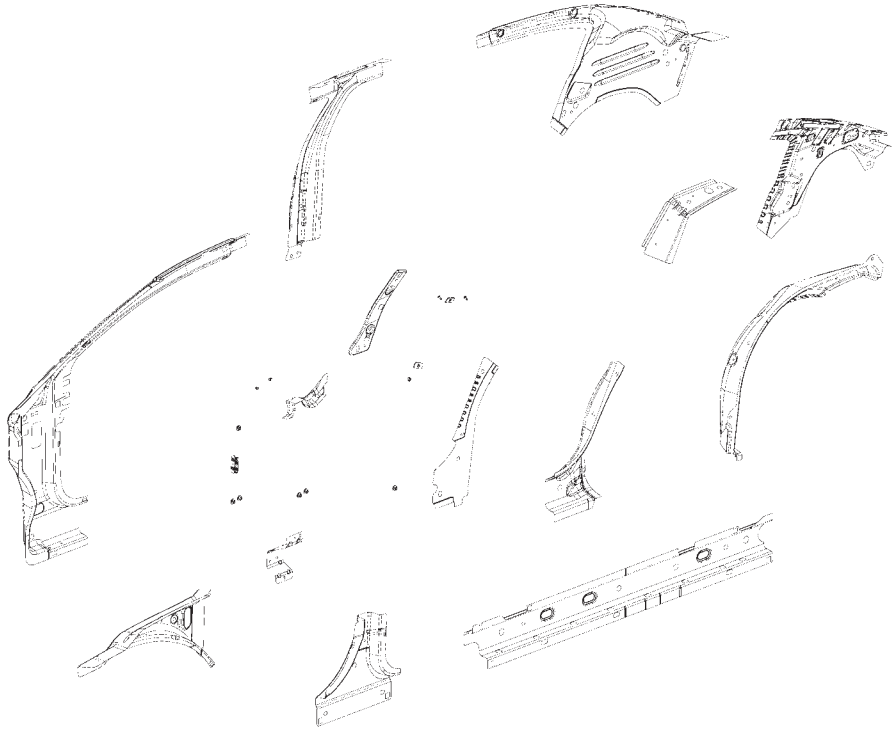

AA TROUGH – QTR OTR PANEL DRAIN RT –
AA TROUGH – QTR OTR PANEL DRAIN LT –
AB PANEL – HINGE PILLAR RT –
AB PANEL – HINGE PILLAR LT –
AC PANEL – QTR INR UPR RT –
AC PANEL – QTR INR UPR LT –
AD PANEL – RR QTR RT –
AD PANEL – RR QTR LT –
AE PANEL – B-PILLAR RT –
AE PANEL – B-PILLAR LT –
AF PANEL – WHEELHOUSE OTR RT –
AF PANEL – WHEELHOUSE OTR RR RT –
AG REINF – RR SEAT BELT ANCHOR MOUNTING RT –
AG REINF – RR SEAT BELT ANCHOR MOUNTING LT –
AH REINF – C-PILLAR LWR RT –
AH REINF – C-PILLAR LWR LT –
AJ SILL – OTR RT –
AJ SILL – OTR LT –
AK PANEL – QTR PANEL LWR RT –
AK PANEL – QTR PANEL LWR LT –
AL STUD.WELD/EXTERNAL – NO.FIN.PILOT.PT.SPECIAL – SABIC INFLATOR TO QTR INR UPR PNL
AM REINF – SHELF EXTENSION RT –
AM REINF – SHELF EXTENSION LT –

Back to Index

PARTS IDENTIFICATION LEGEND, OVERVIEW 27

AA TROUGH – QTR OTR PANEL DRAIN RT –
AA TROUGH – QTR OTR PANEL DRAIN LT –
AB PANEL – HINGE PILLAR RT –
AB PANEL – HINGE PILLAR LT –
AC PANEL – QTR INR UPR RT –
AC PANEL – QTR INR UPR LT –
AD PANEL – RR QTR RT –
AD PANEL – RR QTR LT –
AE PANEL – B-PILLAR RT –
AE PANEL – B-PILLAR LT –
AF PANEL – WHEELHOUSE OTR RT –
AF PANEL – WHEELHOUSE OTR RR RT –
AG REINF – RR SEAT BELT ANCHOR MOUNTING RT –
AG REINF – RR SEAT BELT ANCHOR MOUNTING LT –
AH REINF – C-PILLAR LWR RT –
AH REINF – C-PILLAR LWR LT –
AJ SILL – OTR RT –
AJ SILL – OTR LT –
AK PANEL – QTR PANEL LWR RT –
AK PANEL – QTR PANEL LWR LT –
AL STUD.WELD/EXTERNAL – NO.FIN.PILOT.PT.SPECIAL – SABIC INFLATOR TO QTR INR UPR PNL
AM REINF – SHELF EXTENSION RT –
AM REINF – SHELF EXTENSION LT –

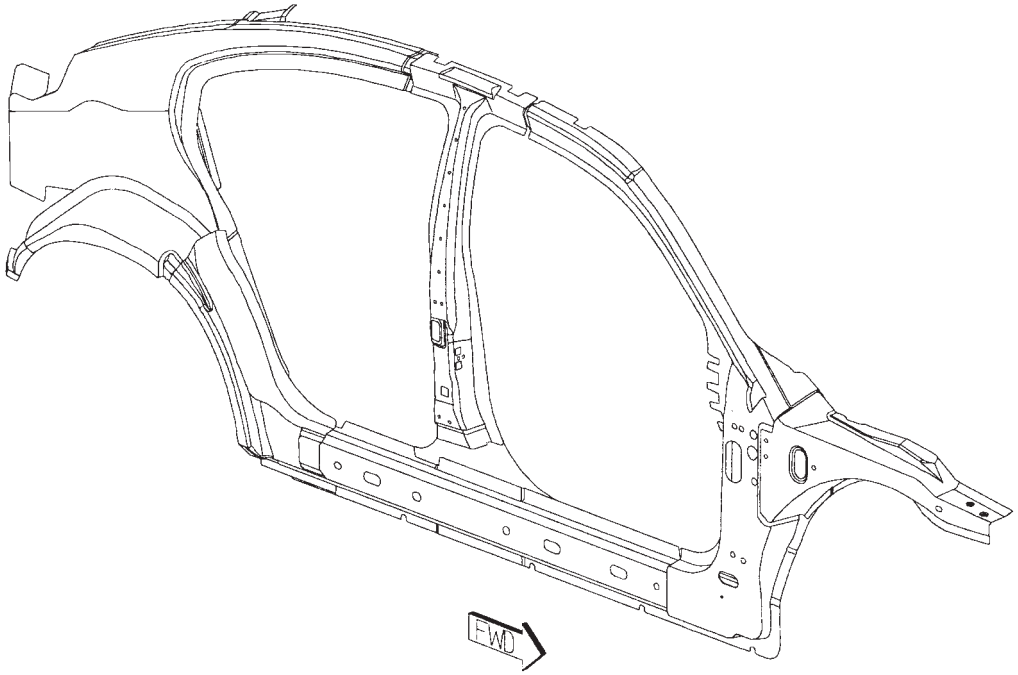

Back to Index

WELD LAYOUT LOCATION GUIDE

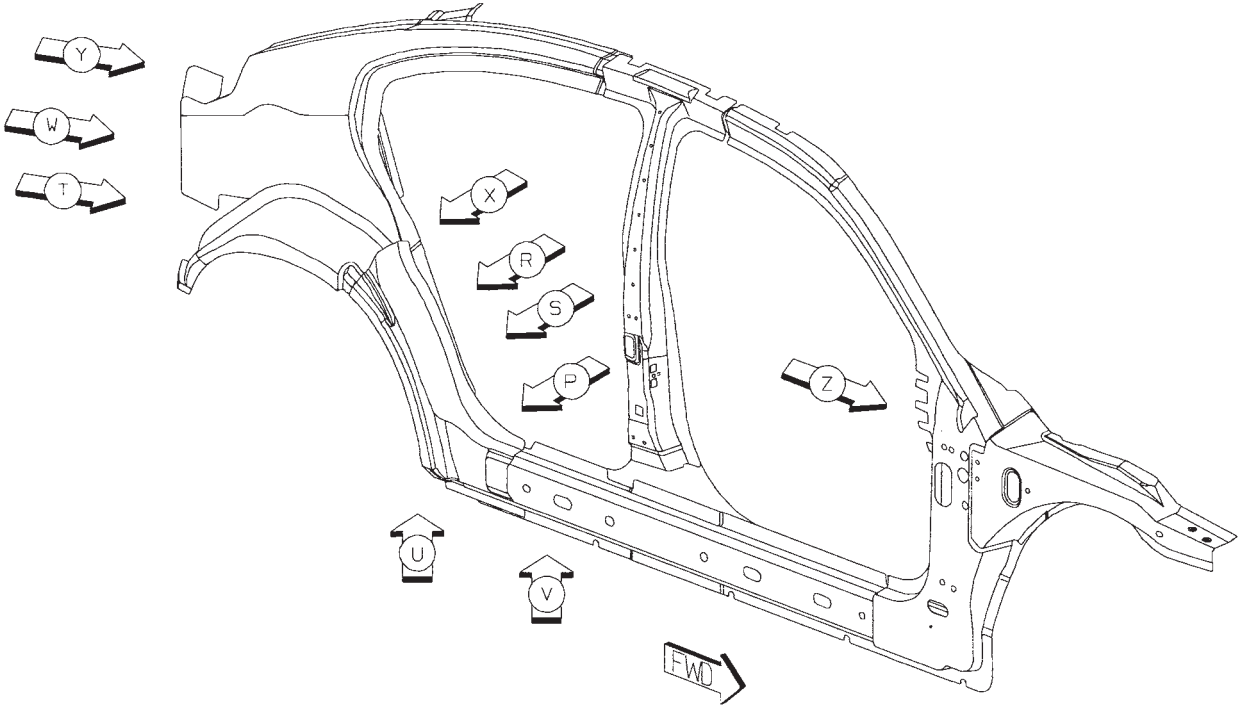

Back to Index

01 AB TO AA 14/SD S/WELDS (ORD)

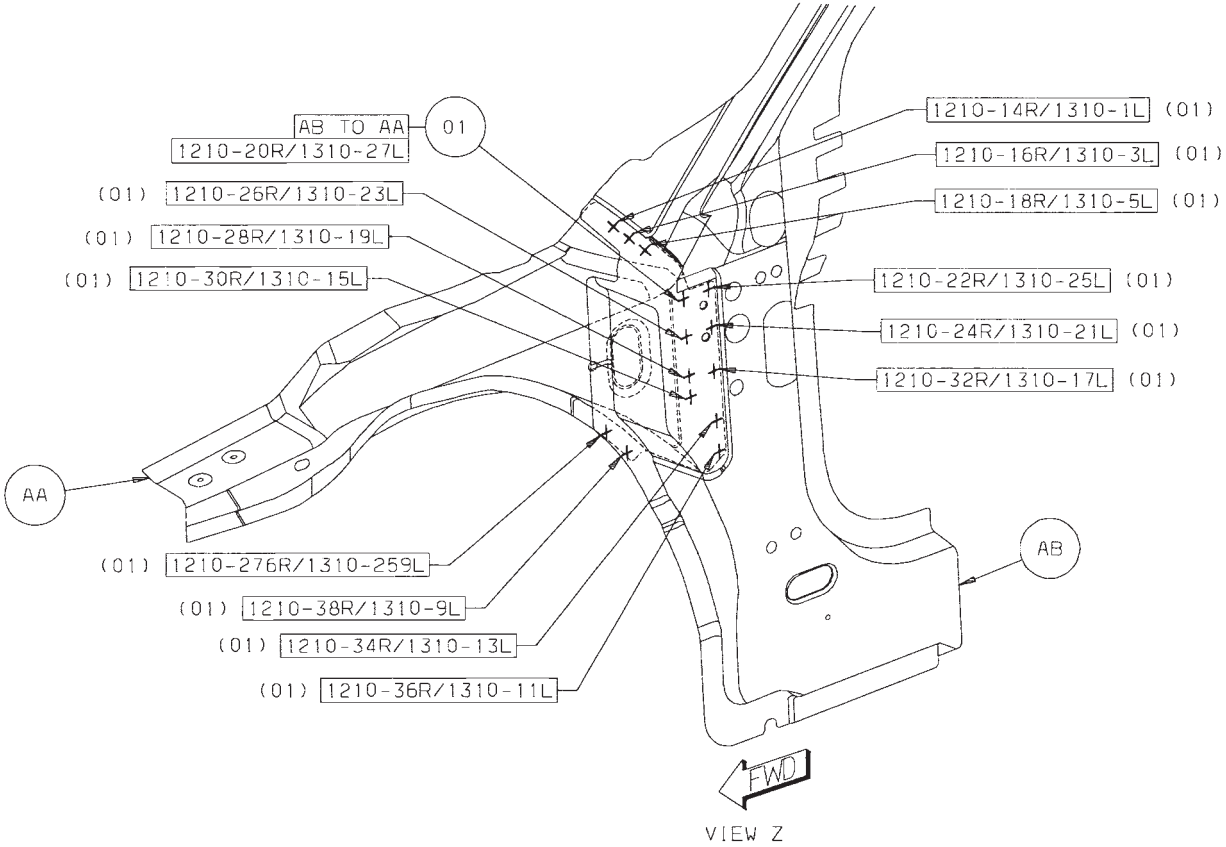

Back to Index

02 AD TO AC 29R/16L S/WELDS (ORD)
03 AE TO AD 9/SD S/WELDS (ORD)

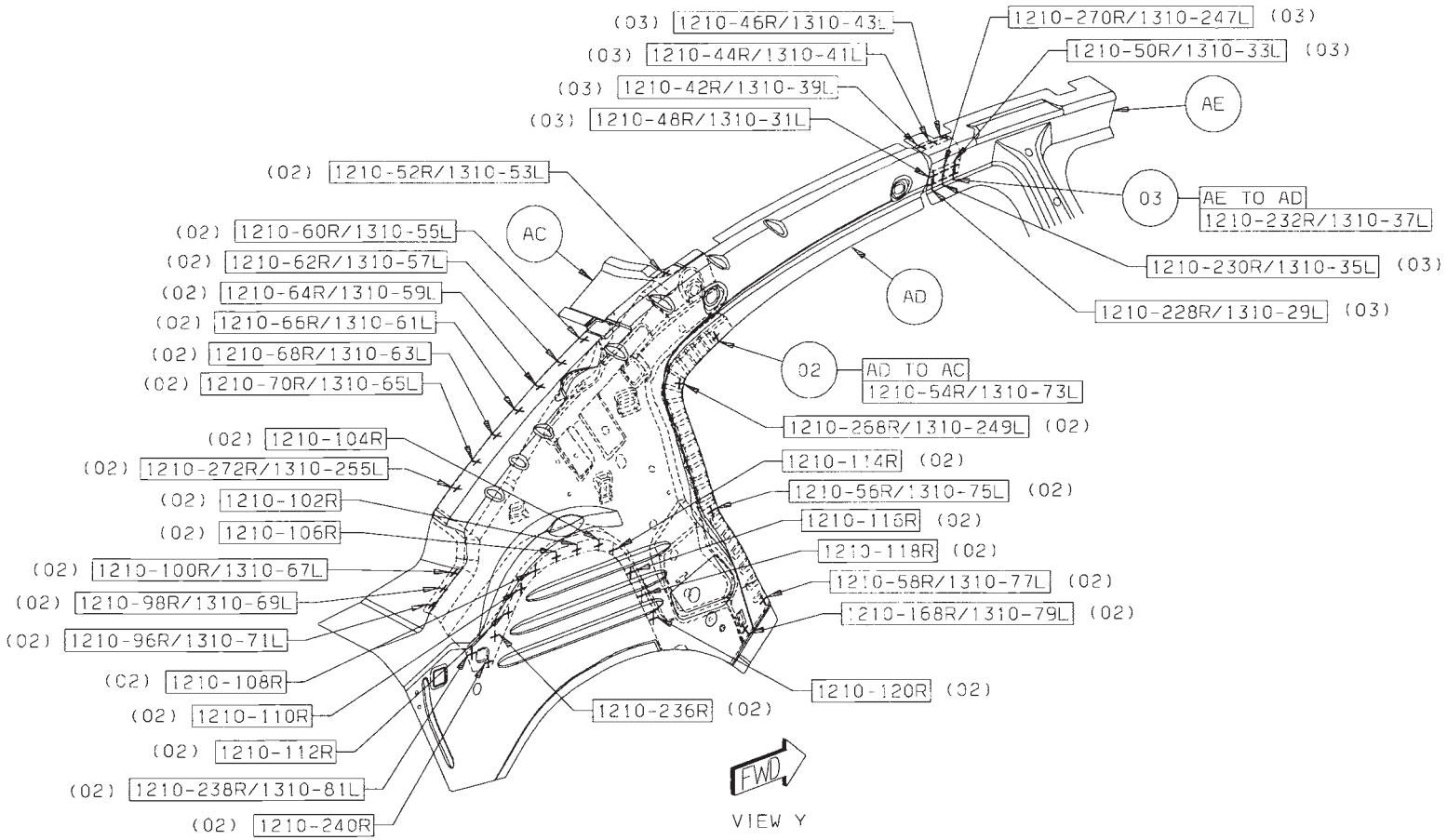

Back to Index

04 AF TO AD TO AC 12L S/WELDS (ORD)
05 AG TO AC 7/SD S/WELDS (SAF)

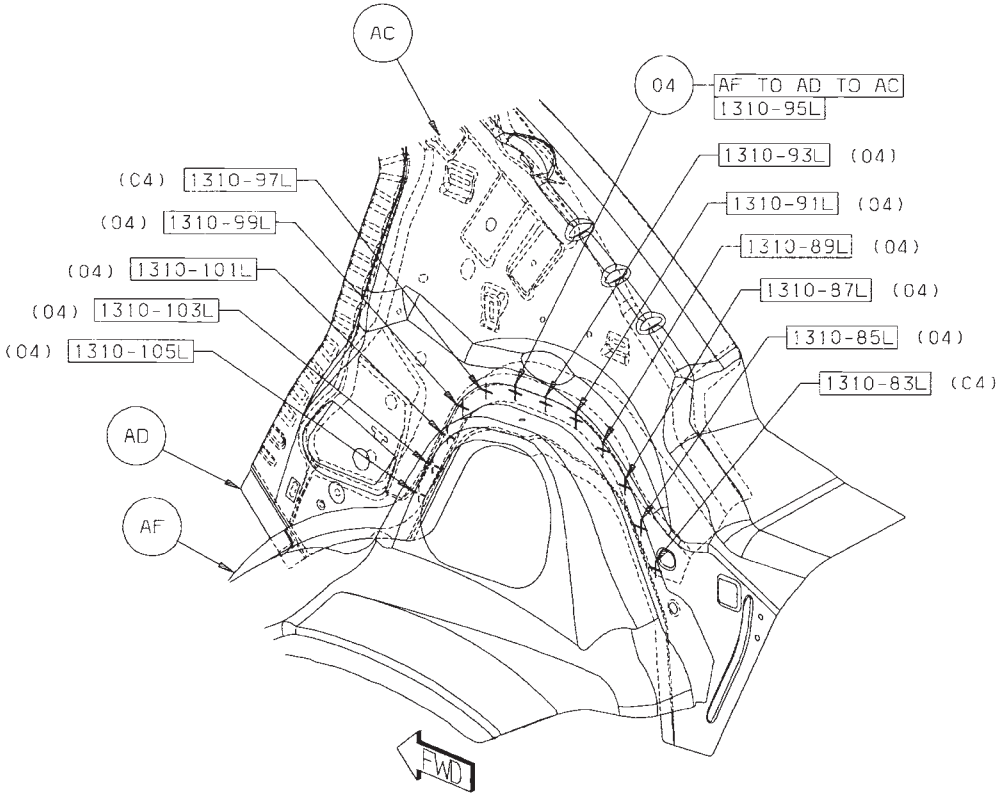

VIEW X
(LEFT SIDE SHOWN)

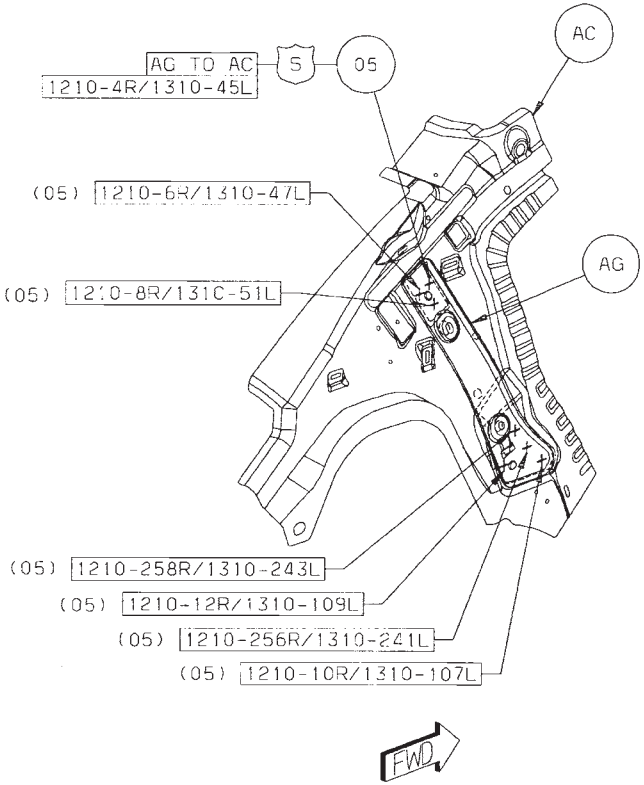

VIEW W

Back to Index

06 AH TO AF 10/SD S/WELDS (ORD)
07 AJ TO AF 8/SD S/WELDS (ORD)
08 AK TO AH TO AD 2/SD S/WELDS (ORD)
09 AK TO AD 3/SD S/WELDS (ORD)

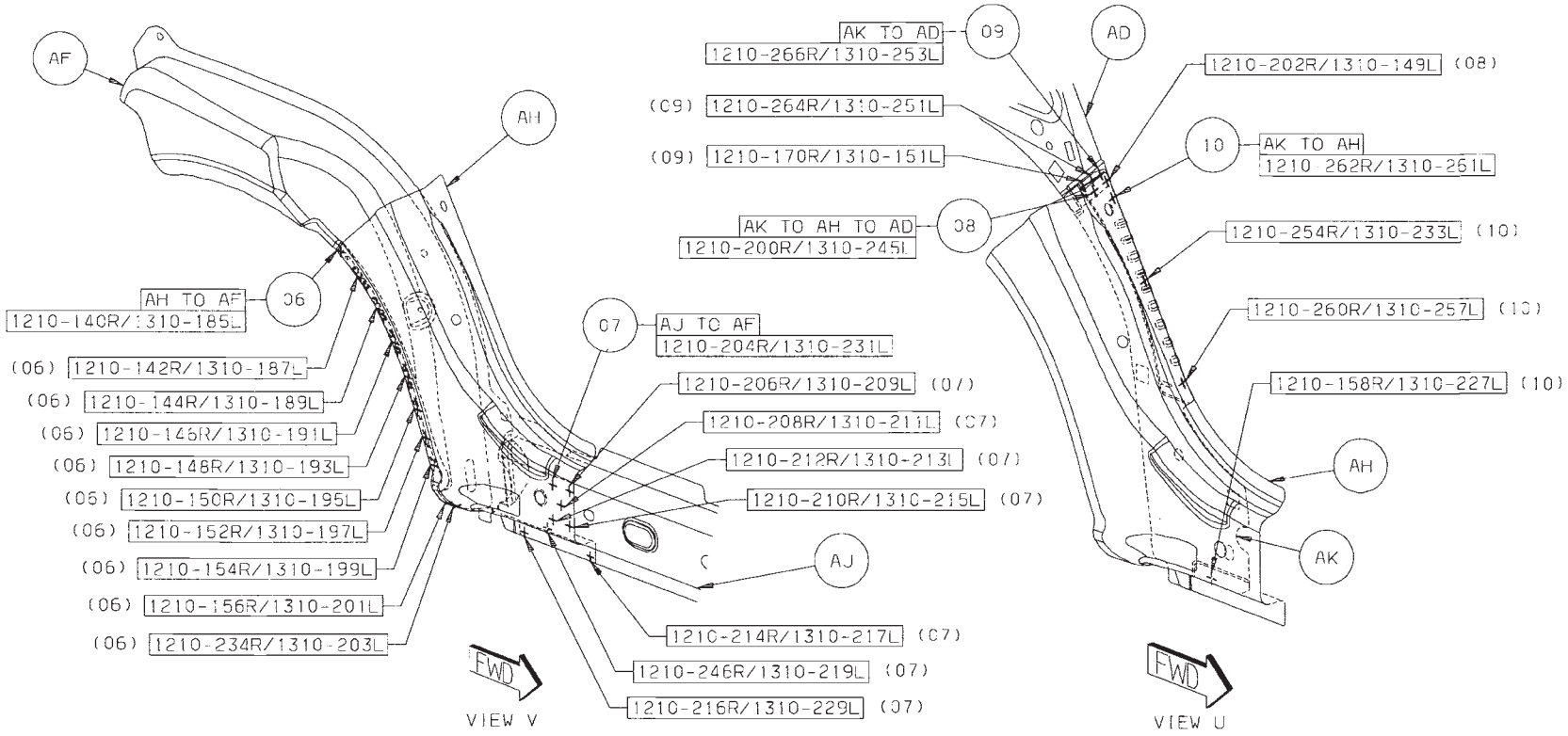

Back to Index

10 AK TO AH 4/SD S/WELDS (ORD)
11 AM TO AC 10/SD S/WELDS (ORD)
12 AL TO AC 2/SD S/WELDS (SAF)
13 AK TO AF 14/SD S/WELDS (ORD)
14 AK TO AF TO AD 1/SD S/WELD (ORD)

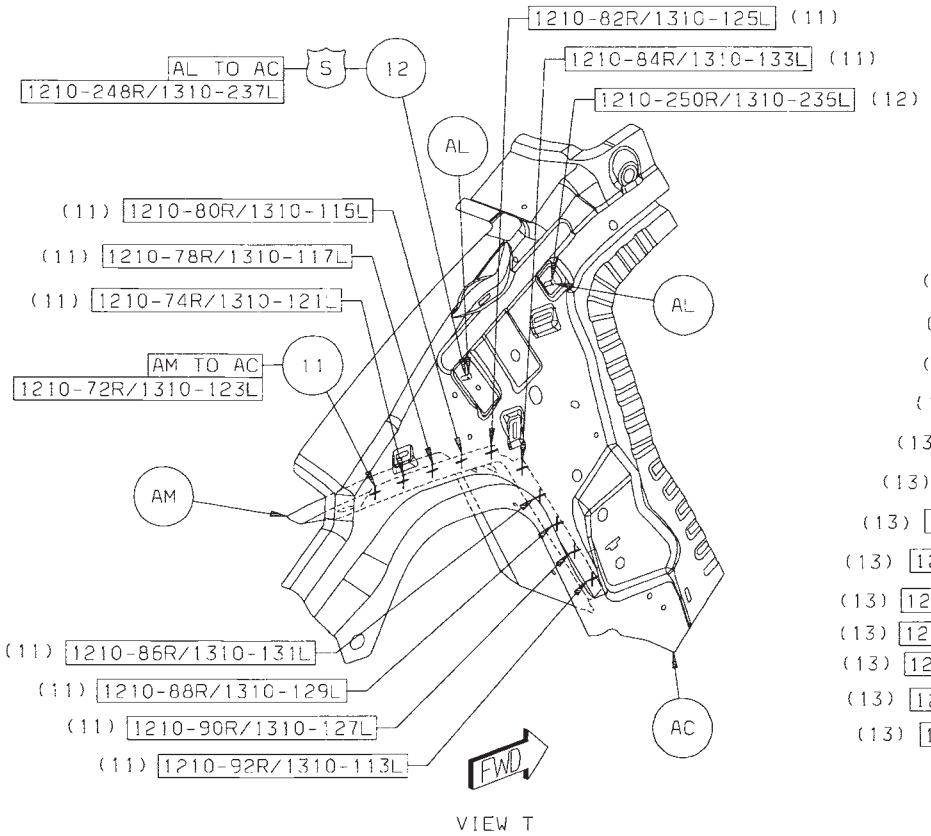

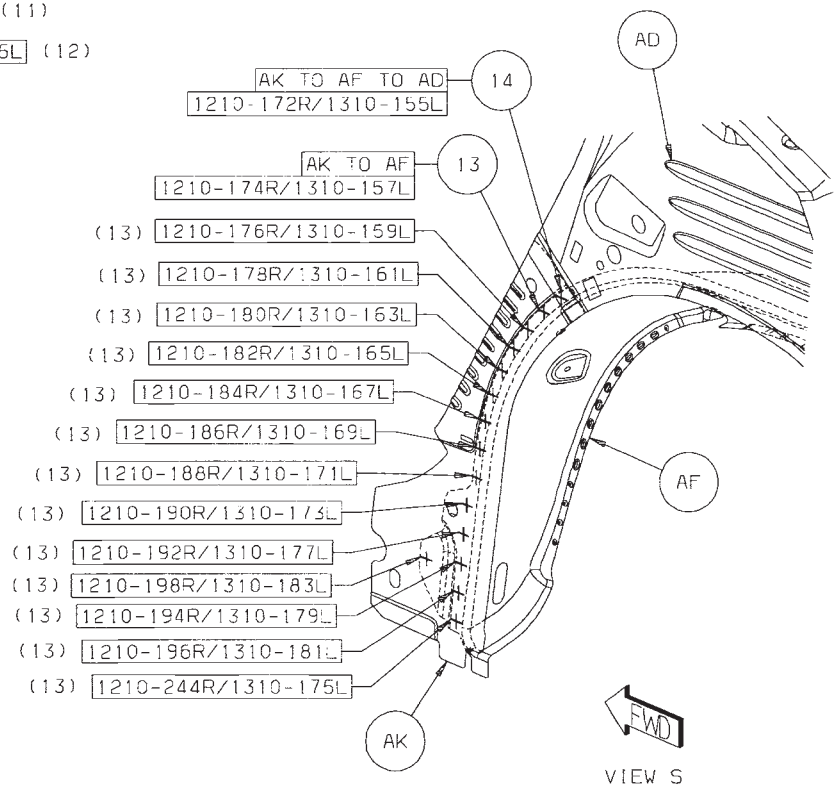

Back to Index

15 AF TO AD TO AC 4/SD S/WELDS (ORD)
16 AD TO AC 11R/3L S/WELDS (ORD)
17 AK TO AJ 5/SD S/WELDS (ORD)

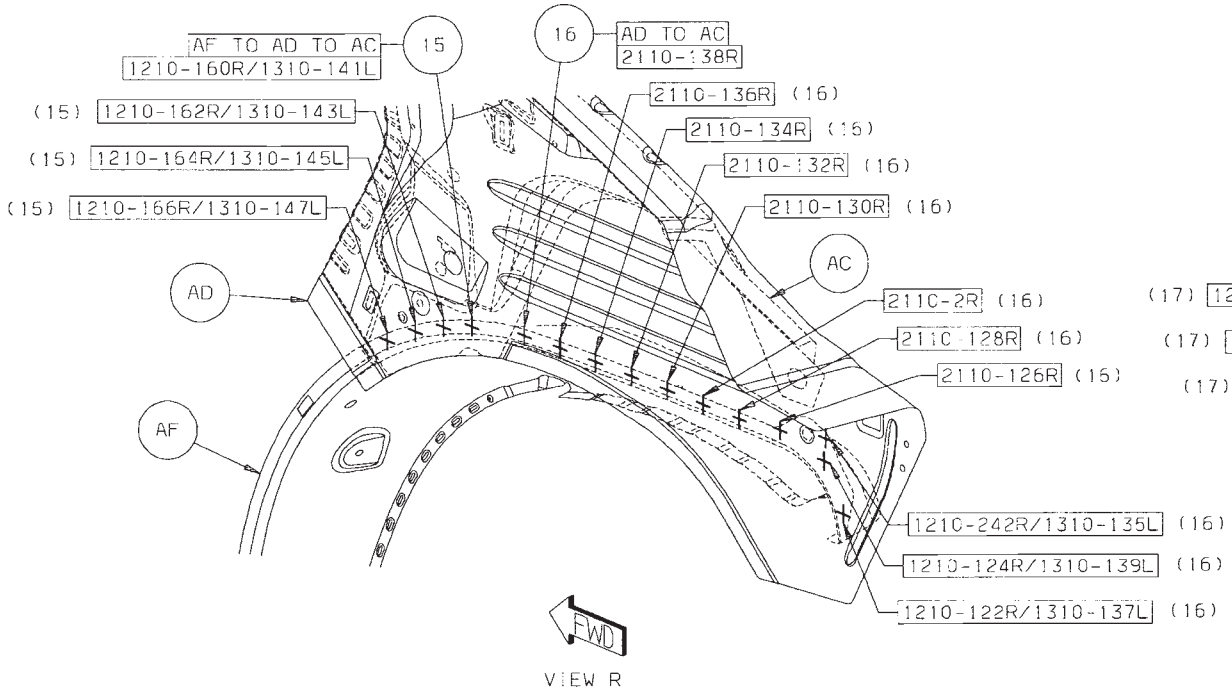

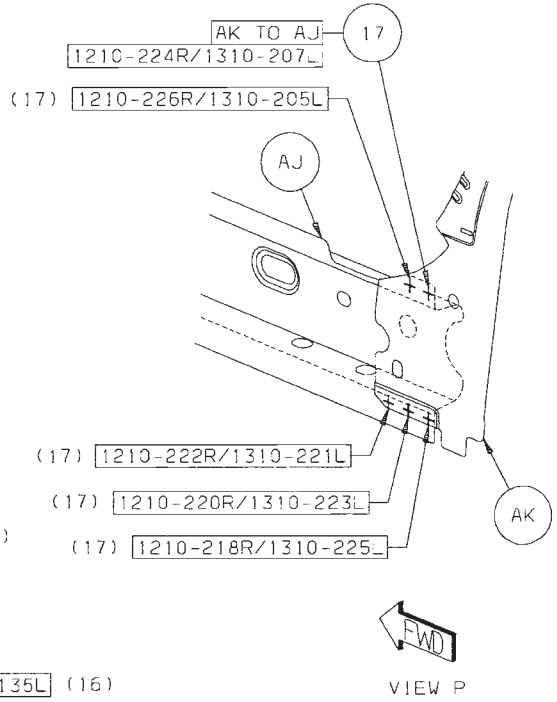

Back to Index

CHRYSLER SEBRING BODY SIDE APERTURE INNER SECTION

AA TROUGH – QTR OTR PANEL DRAIN RT –
AA TROUGH – QTR OTR PANEL DRAIN LT –
AB PANEL – HINGE PILLAR RT –
AB PANEL – HINGE PILLAR LT –
AC PANEL – OTR INR UPR RT –
AC PANEL – OTR INR UPR LT –
AD PANEL – RR OTR RT –
AD PANEL – RR OTR LT –
AE PANEL – B-PILLAR RT –
AE PANEL – B-PILLAR LT –
AF PANEL – RR WHEELHOUSE OTR RT –
AF PANEL – RR WHEELHOUSE OTR RR RT –
AG REINF – RR SEAT BELT ANCHOR MOUNTING RT –
AG REINF – RR SEAT BELT ANCHOR MOUNTING LT –
AH REINF – C-PILLAR LWR RT –
AH REINF – C-PILLAR LWR LT –
AJ SILL – OTR RT –
AJ SILL – OTR LT –
AK EXTENSION – QTR PANEL LWR RT –
AK EXTENSION – QTR PANEL LWR LT –
AL REINF – SHELF EXTENSION RT –
AL REINF – SHELF EXTENSION LT –
AM STUD.WELD/EXTERNAL – NO.FIN.PILOT.PT.SPECIAL – SABIC INFLATOR TO QTR INR UPR PNL
AN NUT/WELD.RD – NO.FIN.SPECIAL – SABIC SENSOR TO QTR INR UPR

Back to Index

PARTS IDENTIFICATION LEGEND, OVERVIEW 26

AA TROUGH – QTR OTR PANEL DRAIN RT –
AA TROUGH – QTR OTR PANEL DRAIN LT –
AB PANEL – HINGE PILLAR RT –
AB PANEL – HINGE PILLAR LT –
AC PANEL – OTR INR UPR RT –
AC PANEL – OTR INR UPR LT –
AD PANEL – RR OTR RT –
AD PANEL – RR OTR LT –
AE PANEL – B-PILLAR RT –
AE PANEL – B-PILLAR LT –
AF PANEL – RR WHEELHOUSE OTR RT –
AF PANEL – RR WHEELHOUSE OTR RR RT –
AG REINF – RR SEAT BELT ANCHOR MOUNTING RT –
AG REINF – RR SEAT BELT ANCHOR MOUNTING LT –
AH REINF – C-PILLAR LWR RT –
AH REINF – C-PILLAR LWR LT –
AJ SILL – OTR RT –
AJ SILL – OTR LT –
AK EXTENSION – QTR PANEL LWR RT –
AK EXTENSION – QTR PANEL LWR LT –
AL REINF – SHELF EXTENSION RT –
AL REINF – SHELF EXTENSION LT –
AM STUD.WELD/EXTERNAL – NO.FIN.PILOT.PT.SPECIAL – SABIC INFLATOR TO QTR INR UPR PNL
AN NUT/WELD.RD – NO.FIN.SPECIAL – SABIC SENSOR TO QTR INR UPR

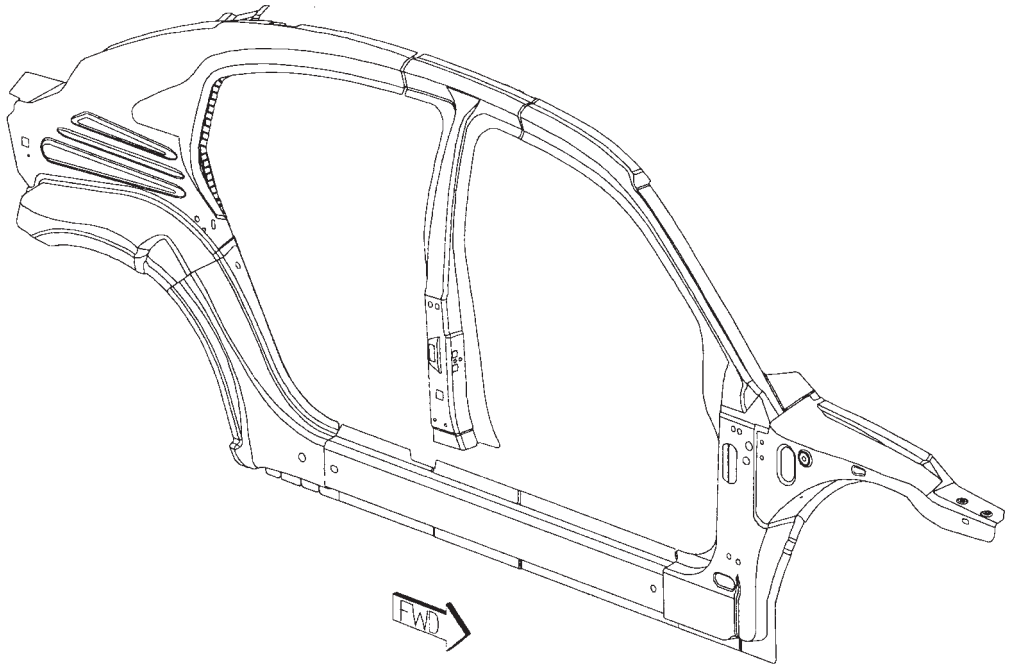

Back to Index

WELD LAYOUT LOCATION GUIDE

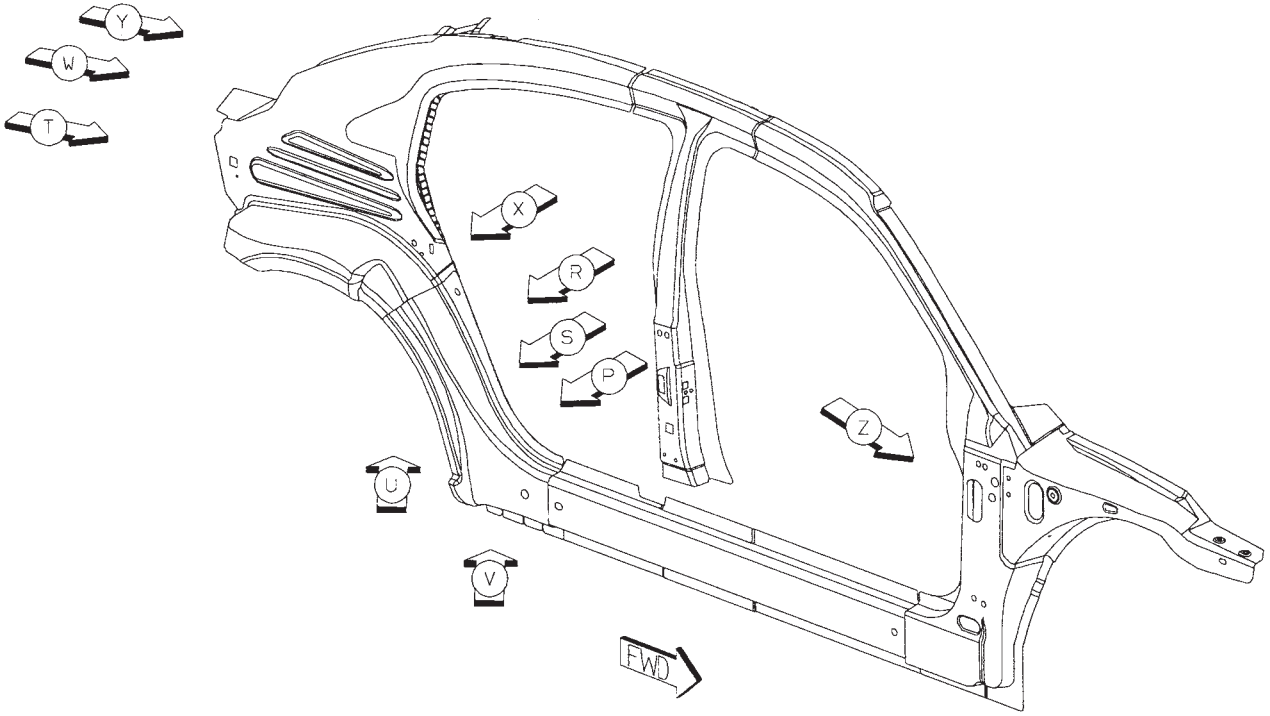

Back to Index

01 AB TO AA 14/SD S/WELDS (ORD)

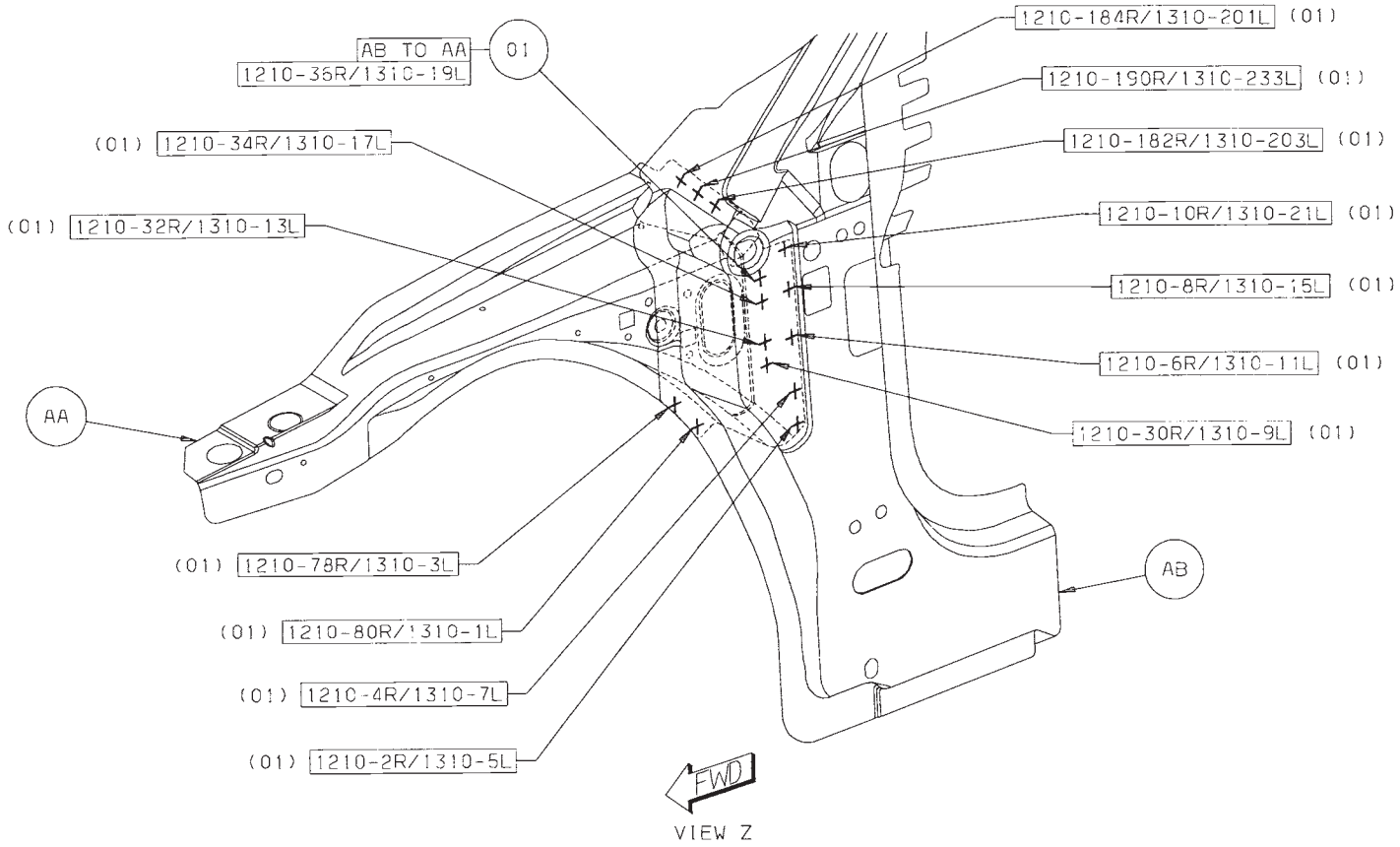

Back to Index

02 AD TO AC 25R/15L S/WELDS (ORD)
03 AE TO AD 9/SD S/WELDS (ORD)

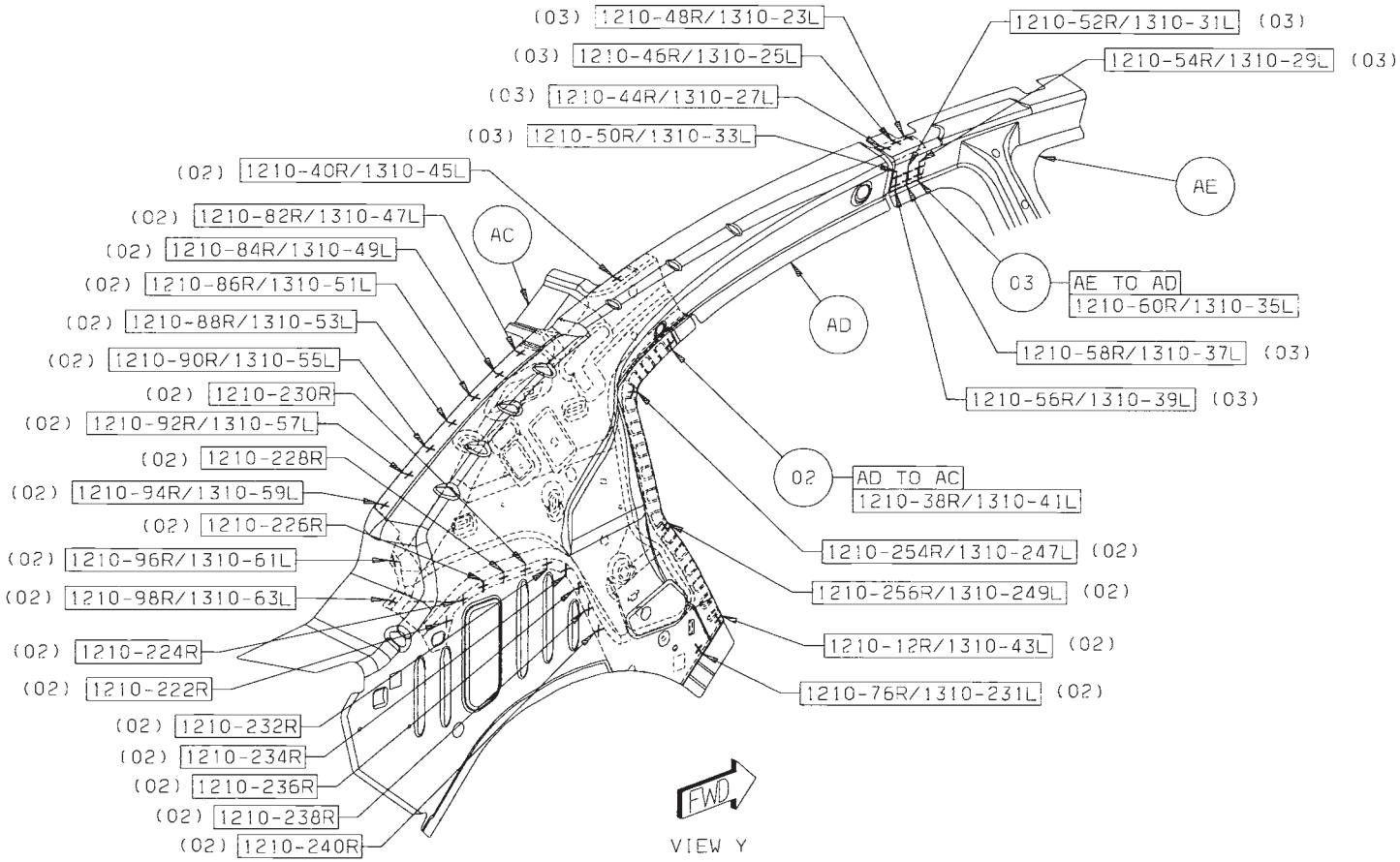

Back to Index

04 AF TO AD TO AC 10L S/WELDS (ORD)
05 AF TO AD 2L S/WELDS (ORD)
06 AD TO AC 2L S/WELDS (ORD)
07 AG TO AC 7/SD S/WELDS (SAF)

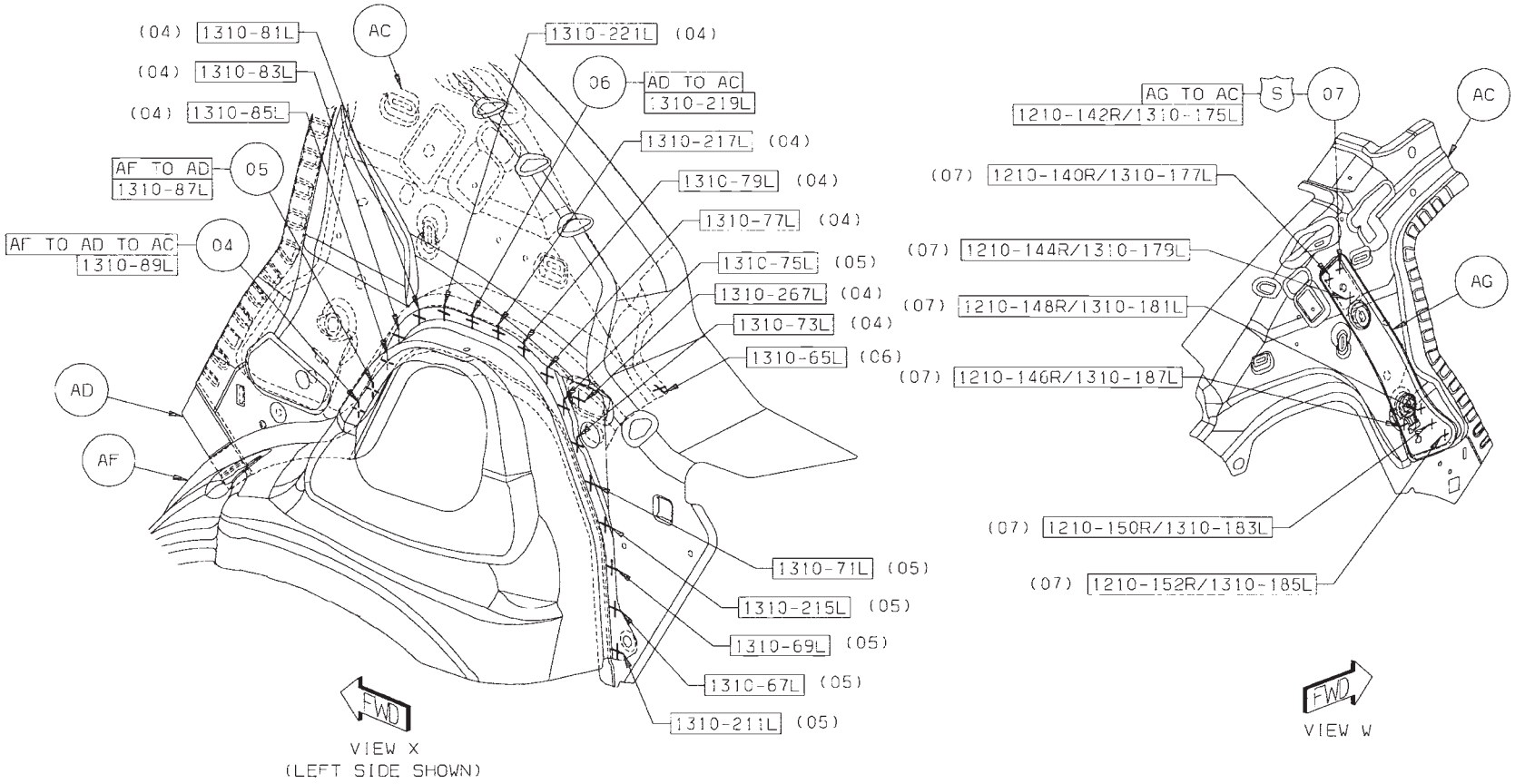

Back to Index

08 AH TO AF 10/SD S/WELDS (ORD)
09 AJ TO AH 7/SD S/WELDS (ORD)
10 AK TO AH TO AD 2/SD S/WELDS (ORD)
11 AK TO AD 3/SD S/WELDS (ORD)
12 AK TO AH 3/SD S/WELDS (ORD)

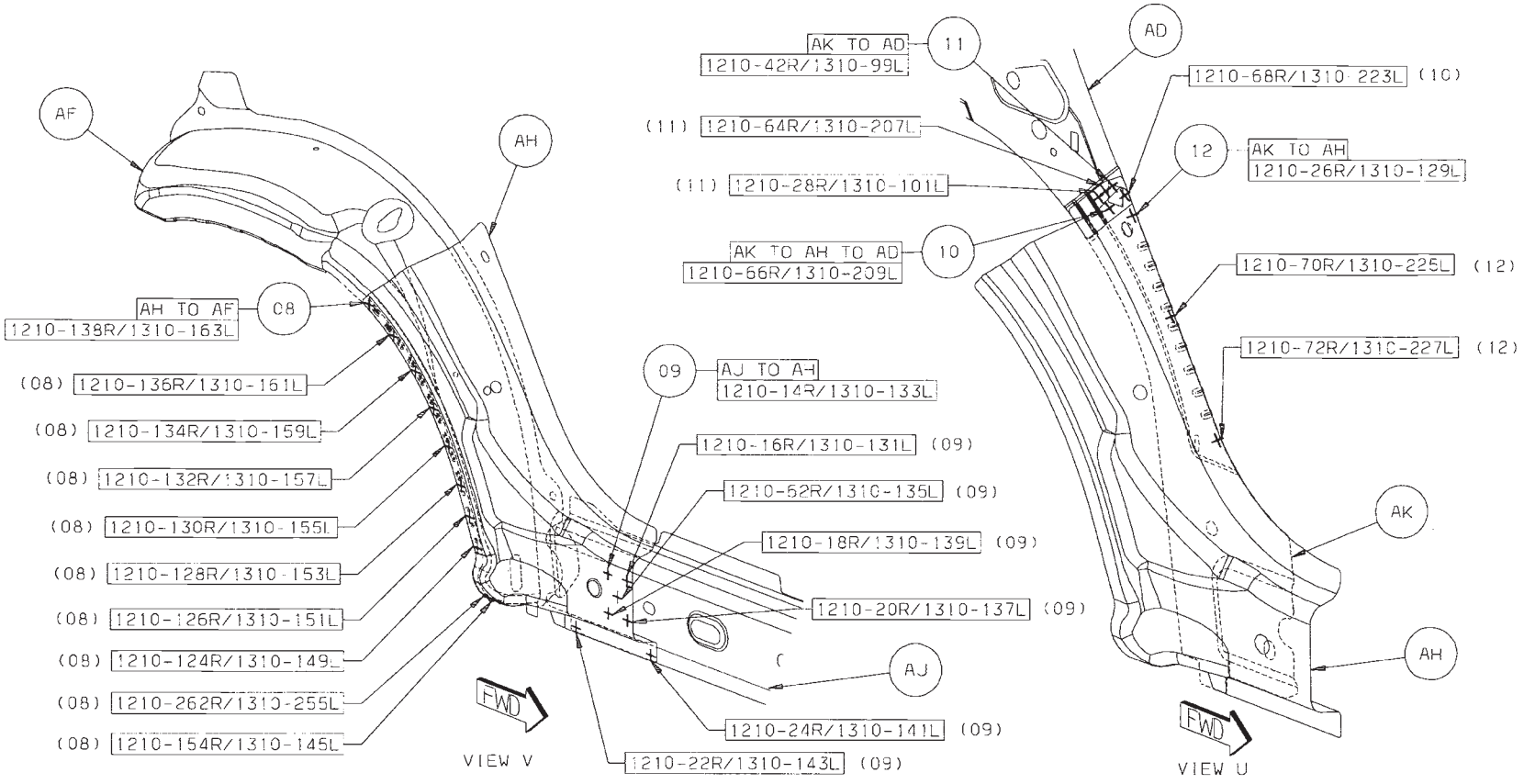

Back to Index

13 AN TO AC 1/SD PROJ WELD (SAF)
14 AL TO AC 10/SD S/WELDS (ORD)
15 AM TO AC 2/SD PROJ WELDS (SAF)
16 AK TO AF 14/SD S/WELDS (ORD)
17 AK TO AF TO AD 2/SD S/WELDS (ORD)

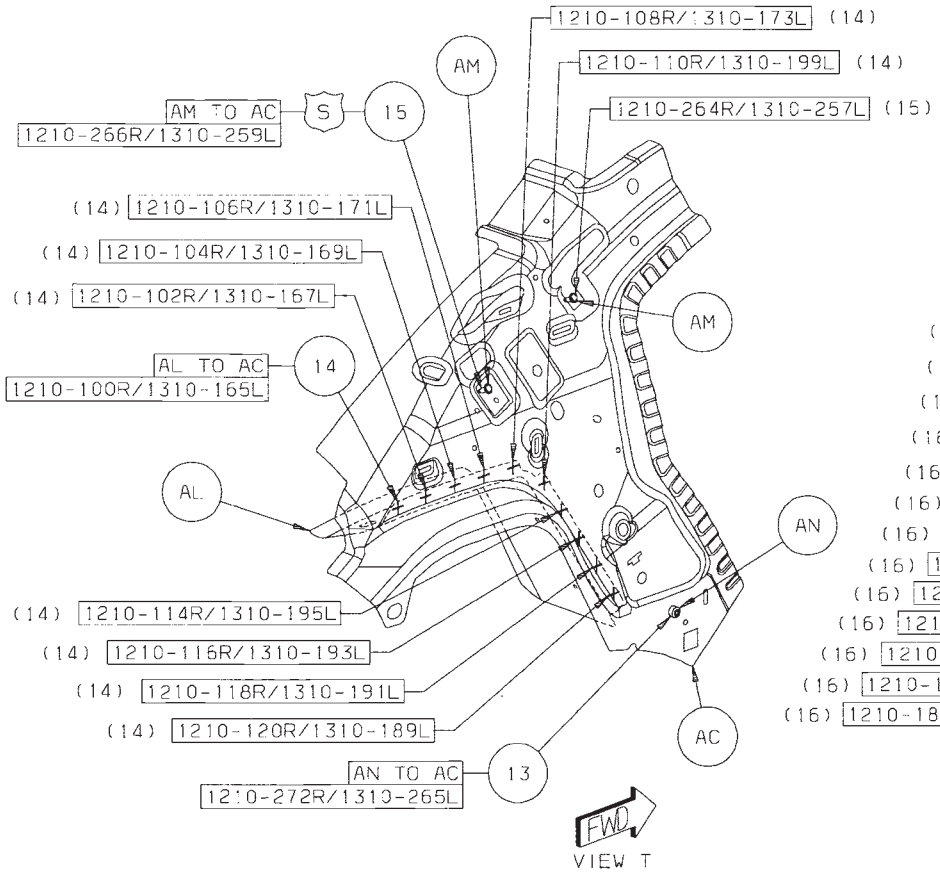

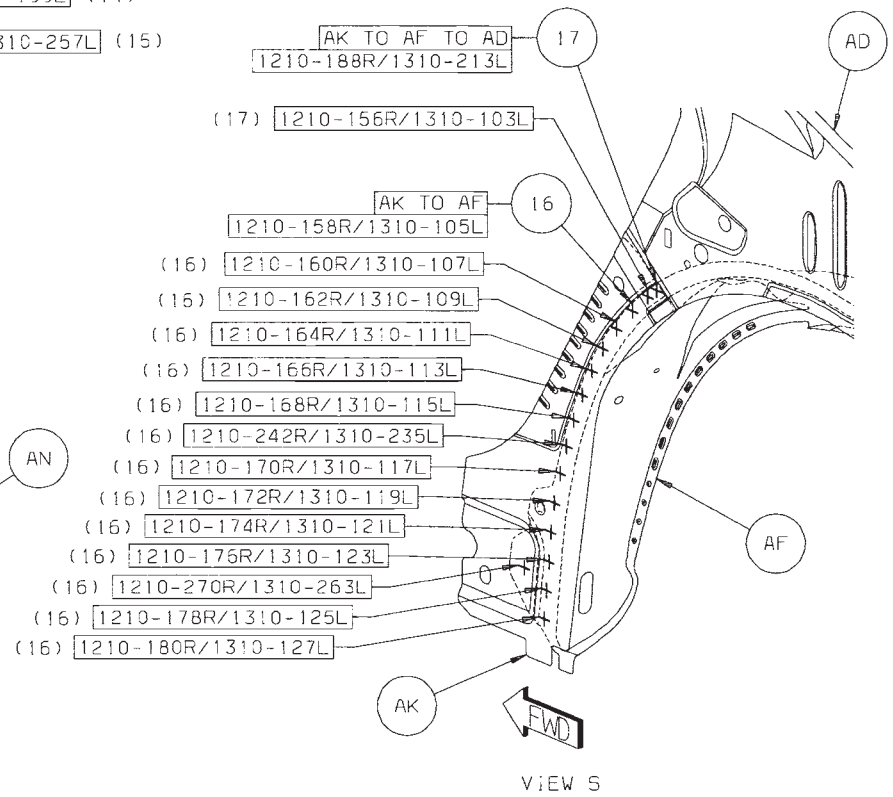

Back to Index

18 AF TO AD TO AC 5/SD S/WELDS (ORD)
19 AF TO AC 11/SD S/WELDS (ORD)
20 AK TO AJ 7/SD S/WELDS (ORD)

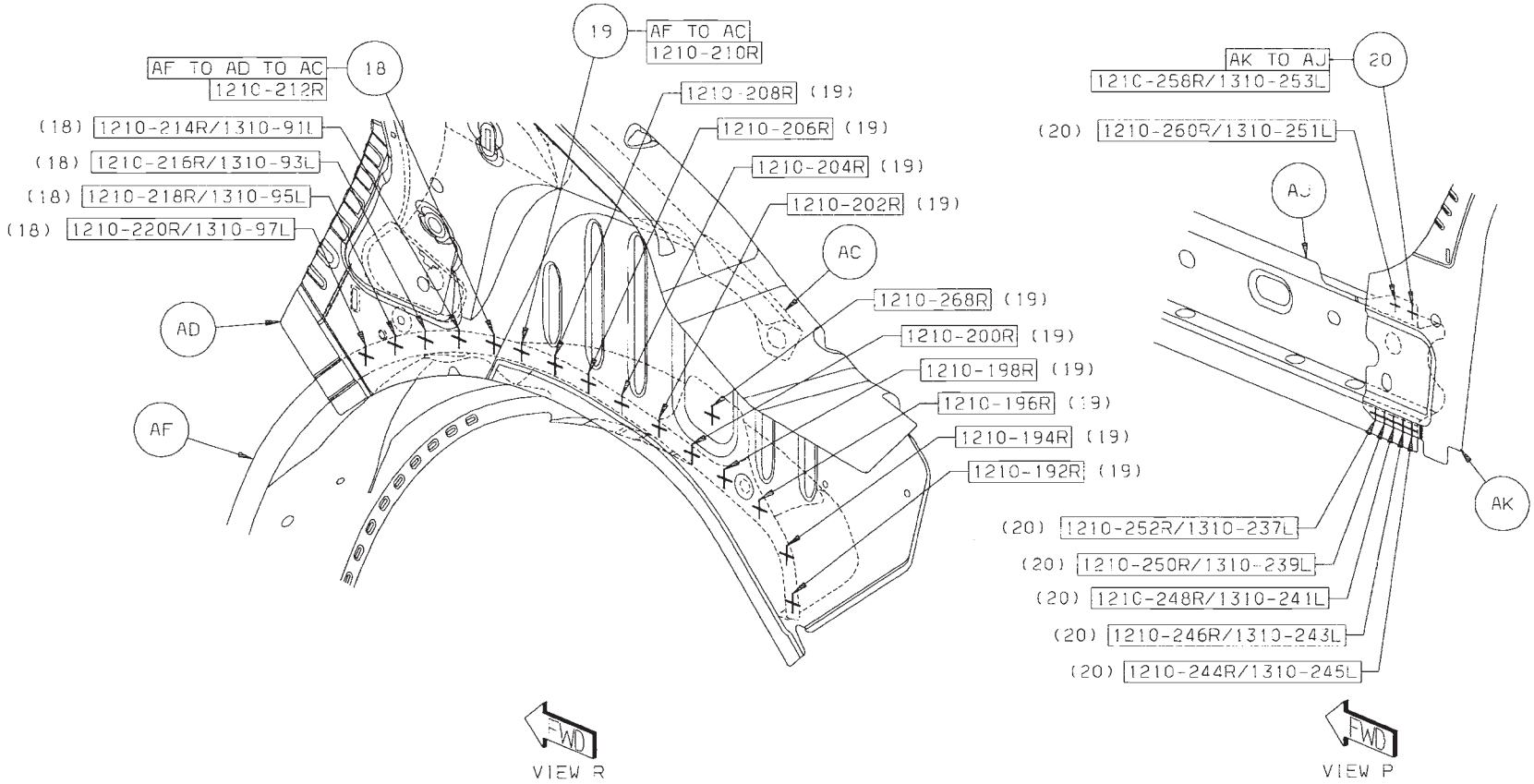

Back to Index

CHRYSLER SEBRING BODY SIDE APERTURE OUTER SECTION

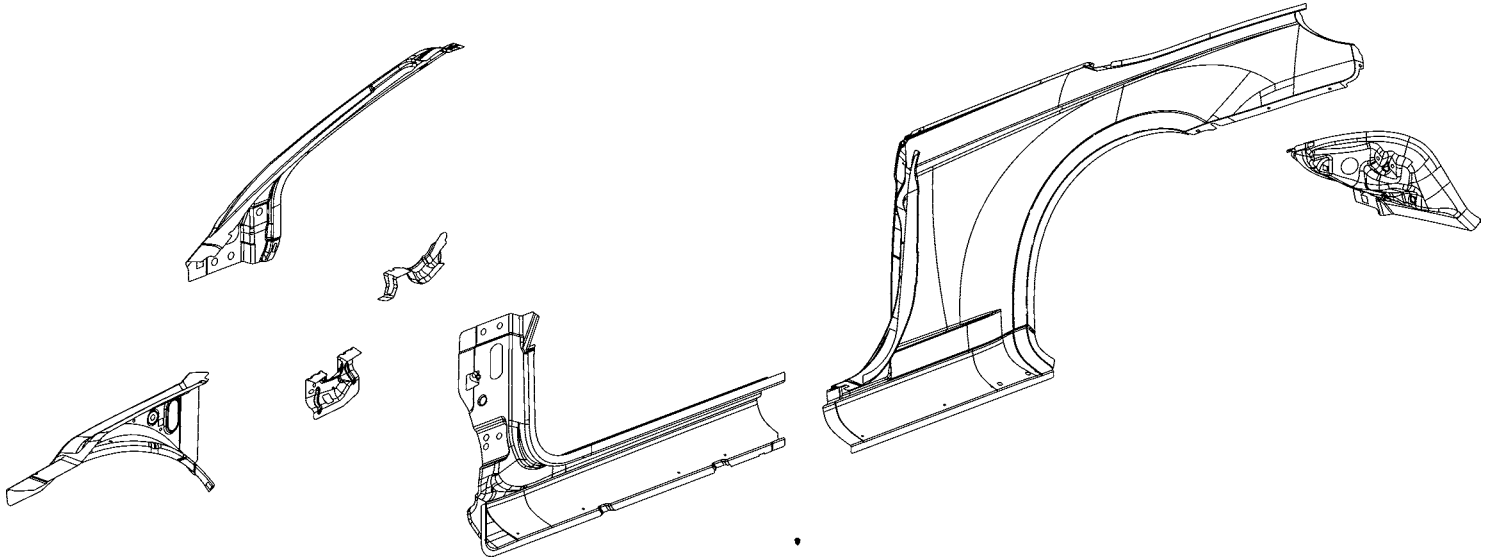

AA PANEL – QTR OTR RT - –
AA PANEL – QTR OTR LT –
AB PANEL – TAIL LAMP MOUNTING RT –
AB PANEL – TAIL LAMP MOUNTING LT –
AC PANEL – SILL OTR RT –
AC PANEL – SILL OTR LT –
AD REINF – A-PILLAR RT –
AD REINF – A-PILLAR LT –

Back to Index

PARTS IDENTIFICATION LEGEND, OVERVIEW 28

AA PANEL – QTR OTR RT - –
AA PANEL – QTR OTR LT –
AB PANEL – TAIL LAMP MOUNTING RT –
AB PANEL – TAIL LAMP MOUNTING LT –
AC PANEL – SILL OTR RT –
AC PANEL – SILL OTR LT –
AD REINF – A-PILLAR RT –
AD REINF – A-PILLAR LT –

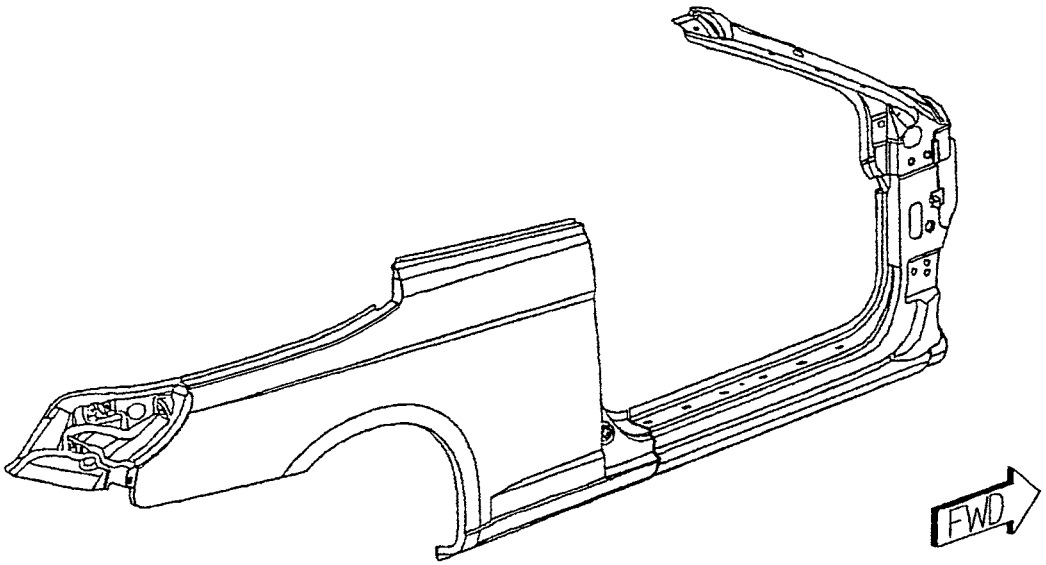

Back to Index

WELD LAYOUT LOCATION GUIDE

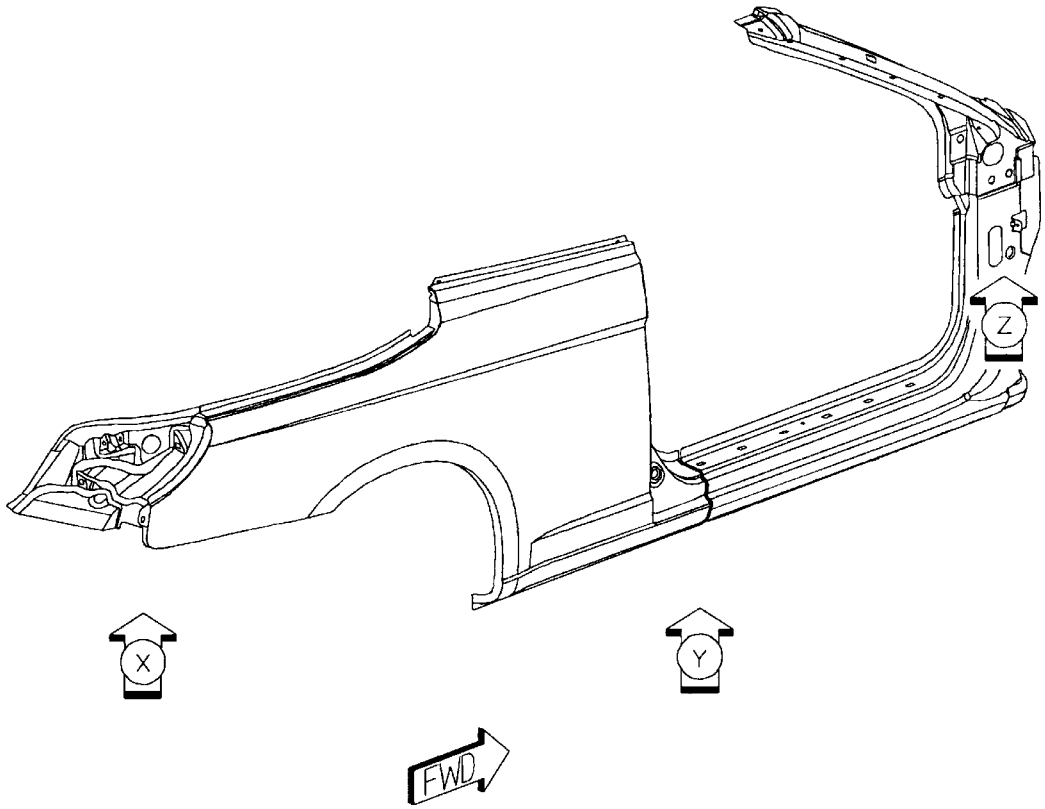

Back to Index

01 AD TO AC 9/SD S/WELDS (ORD)

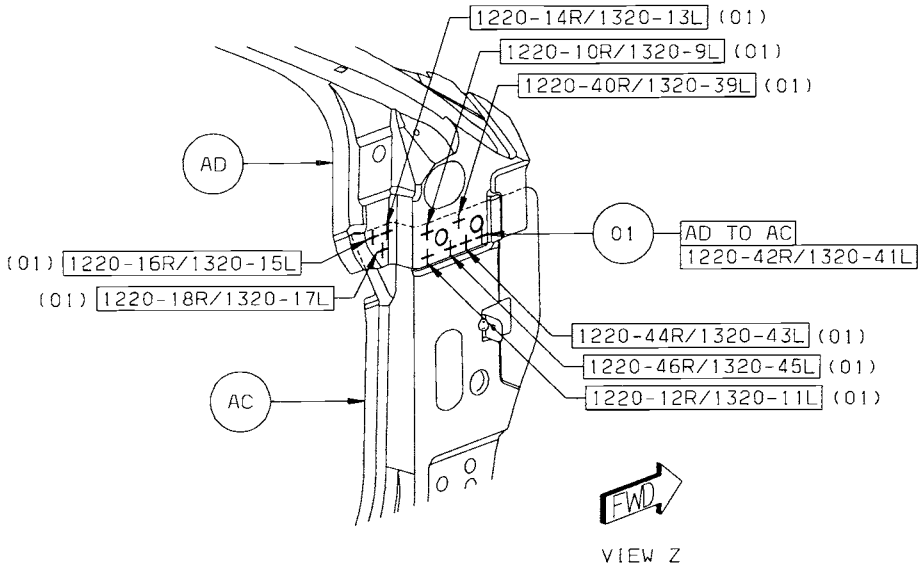

Back to Index

02 AC TO AA 6/SD S/WELDS (ORD)
03 AC TO AA 1/SD STRUC ADH
04 AB TO AA 10/SD S/WELDS (ORD)

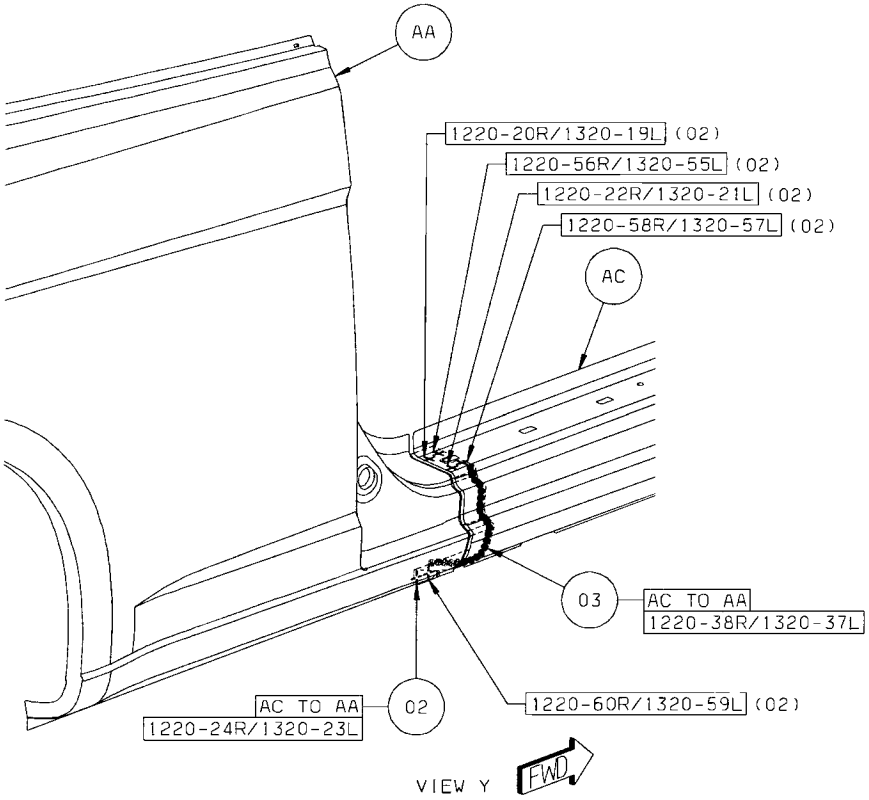

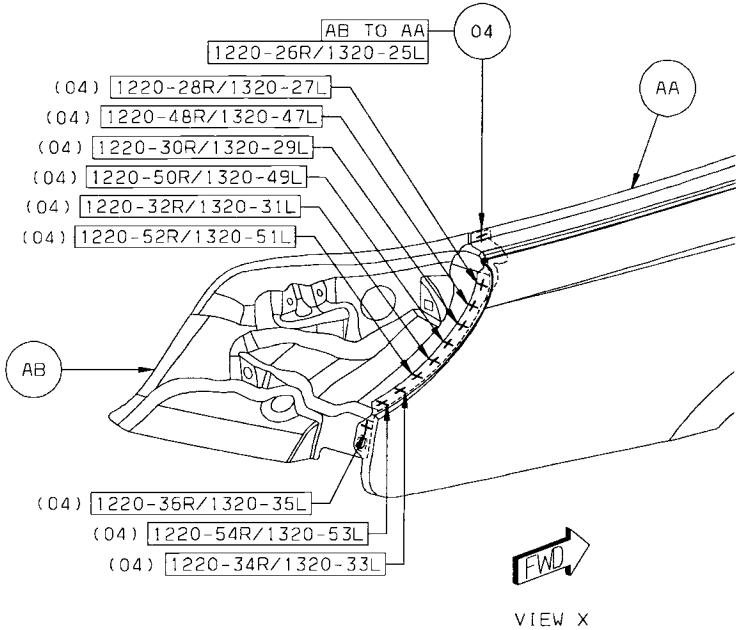

Back to Index

DODGE AVENGER BODY SIDE APERTURE OUTER SECTION

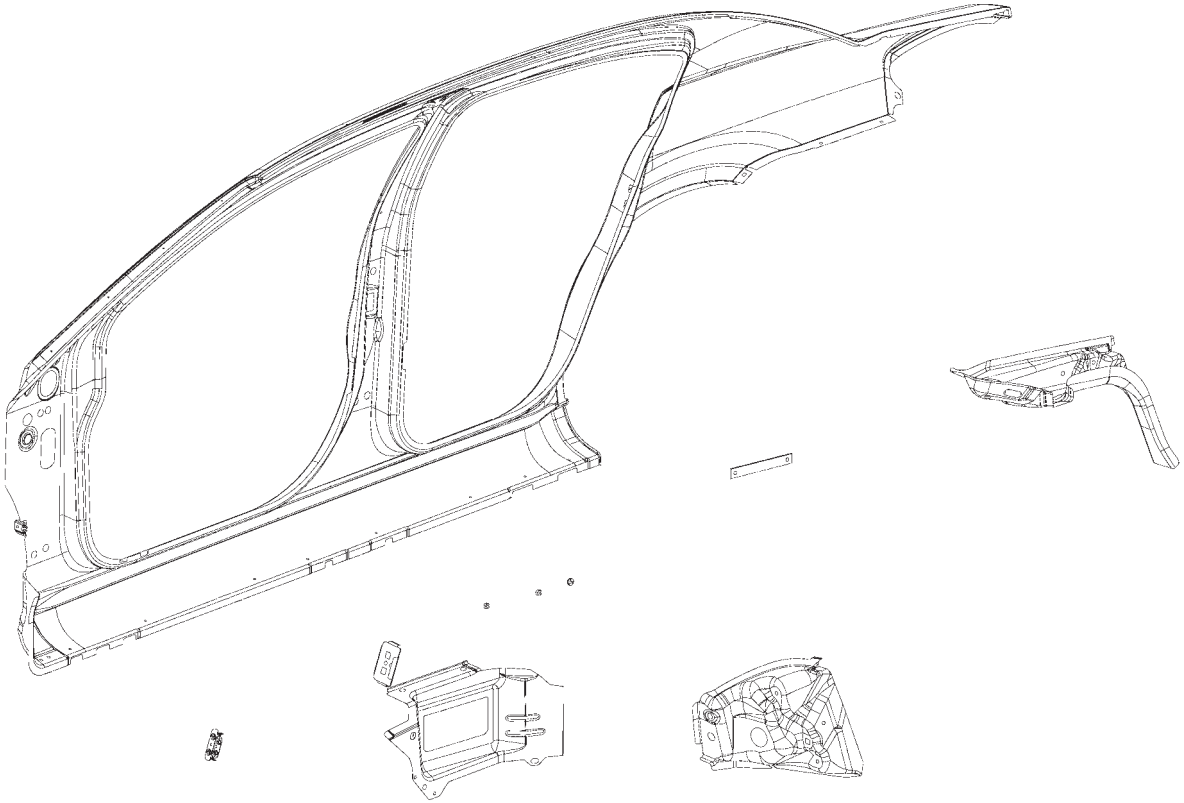

AA PANEL – BODY SIDE APERTURE RT –
AA PANEL – BODY SIDE APERTURE LT –
AB REINF – STRIKER PLATE RR –
AC TROUGH – QTR OTR PANEL DRAIN RT –
AC TROUGH – QTR OTR PANEL DRAIN LT –
AD EXTENSION – QTR PANEL TAIL LAMP RT – RT
AD EXTENSION – QTR PANEL TAIL LAMP LT – RT
AE NUT/WELD.SQ – NIBS.NO.FIN.SQUARE – FENDER TO BSA
AF PANEL – RR CLOSURE OTR LWR EXTENSION RT –
AF PANEL – RR CLOSURE OTR LWR EXTENSION LT –

Back to Index

PARTS IDENTIFICATION LEGEND, OVERVIEW 30

AA PANEL – BODY SIDE APERTURE RT –
AA PANEL – BODY SIDE APERTURE LT –
AB REINF – STRIKER PLATE RR –
AC TROUGH – QTR OTR PANEL DRAIN RT –
AC TROUGH – QTR OTR PANEL DRAIN LT –
AD EXTENSION – QTR PANEL TAIL LAMP RT – RT
AD EXTENSION – QTR PANEL TAIL LAMP LT – RT
AE NUT/WELD.SQ – NIBS.NO.FIN.SQUARE – FENDER TO BSA
AF PANEL – RR CLOSURE OTR LWR EXTENSION RT –
AF PANEL – RR CLOSURE OTR LWR EXTENSION LT –

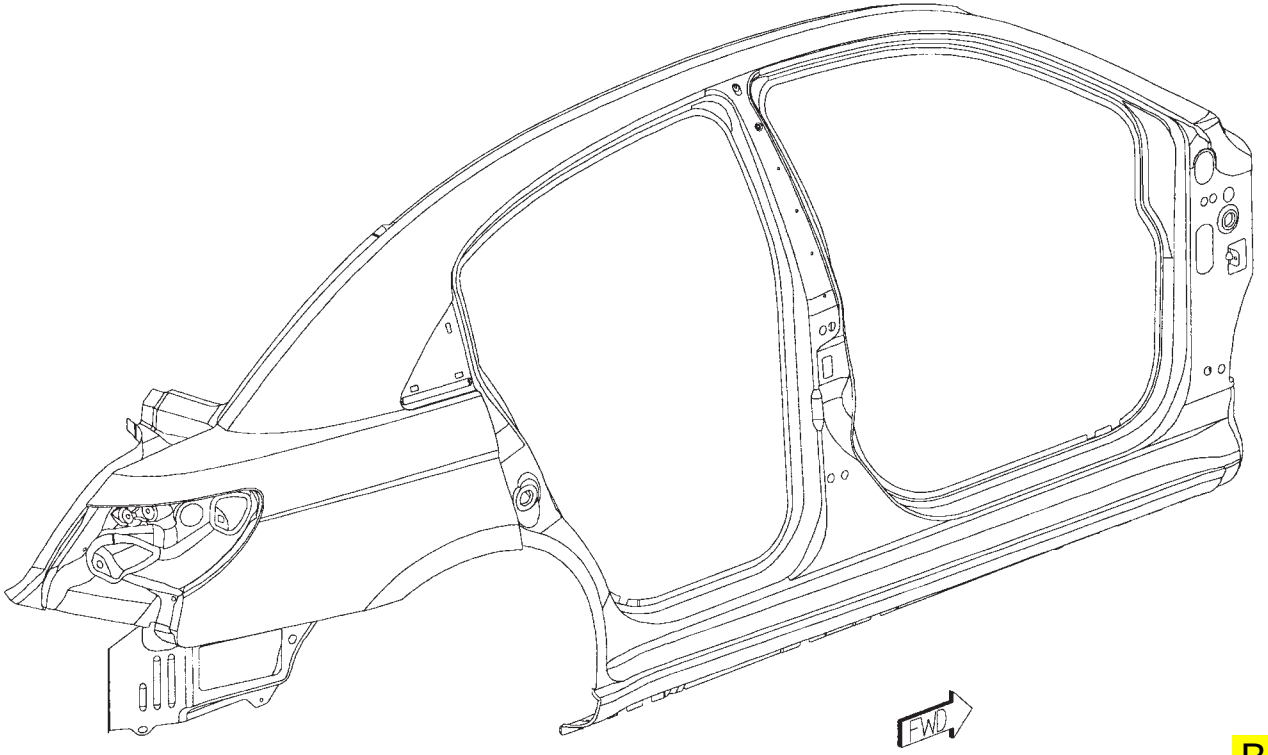

Back to Index

WELD LAYOUT LOCATION GUIDE

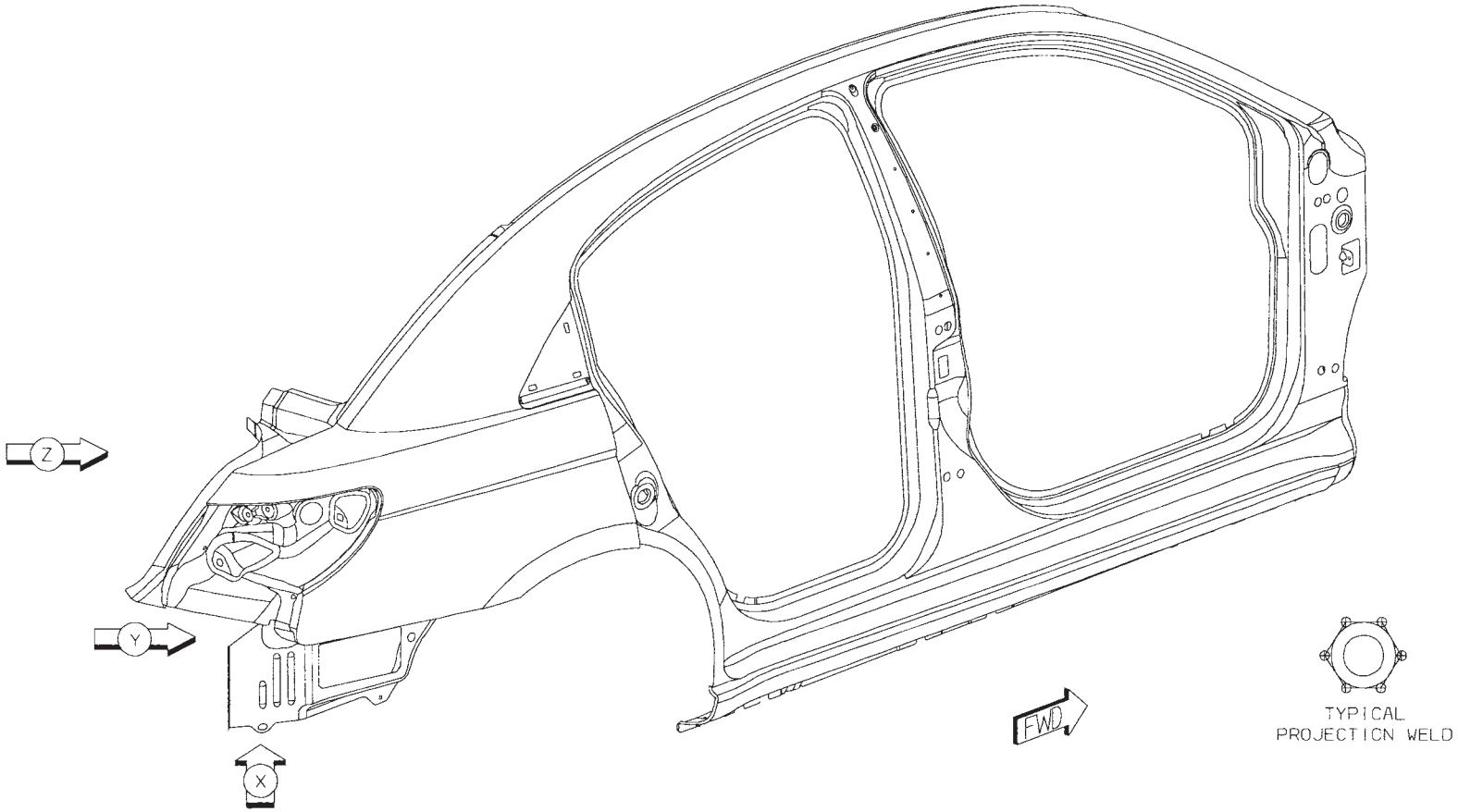

Back to Index

01 AB TO AA 6/SD S/WELDS (ORD)
02 AC TO AA 10/SD S/WELDS (ORD)
03 AD TO AC 8/SD S/WELDS (ORD)
04 AE TO AA 2/SD PROJ WELDS (ORD)

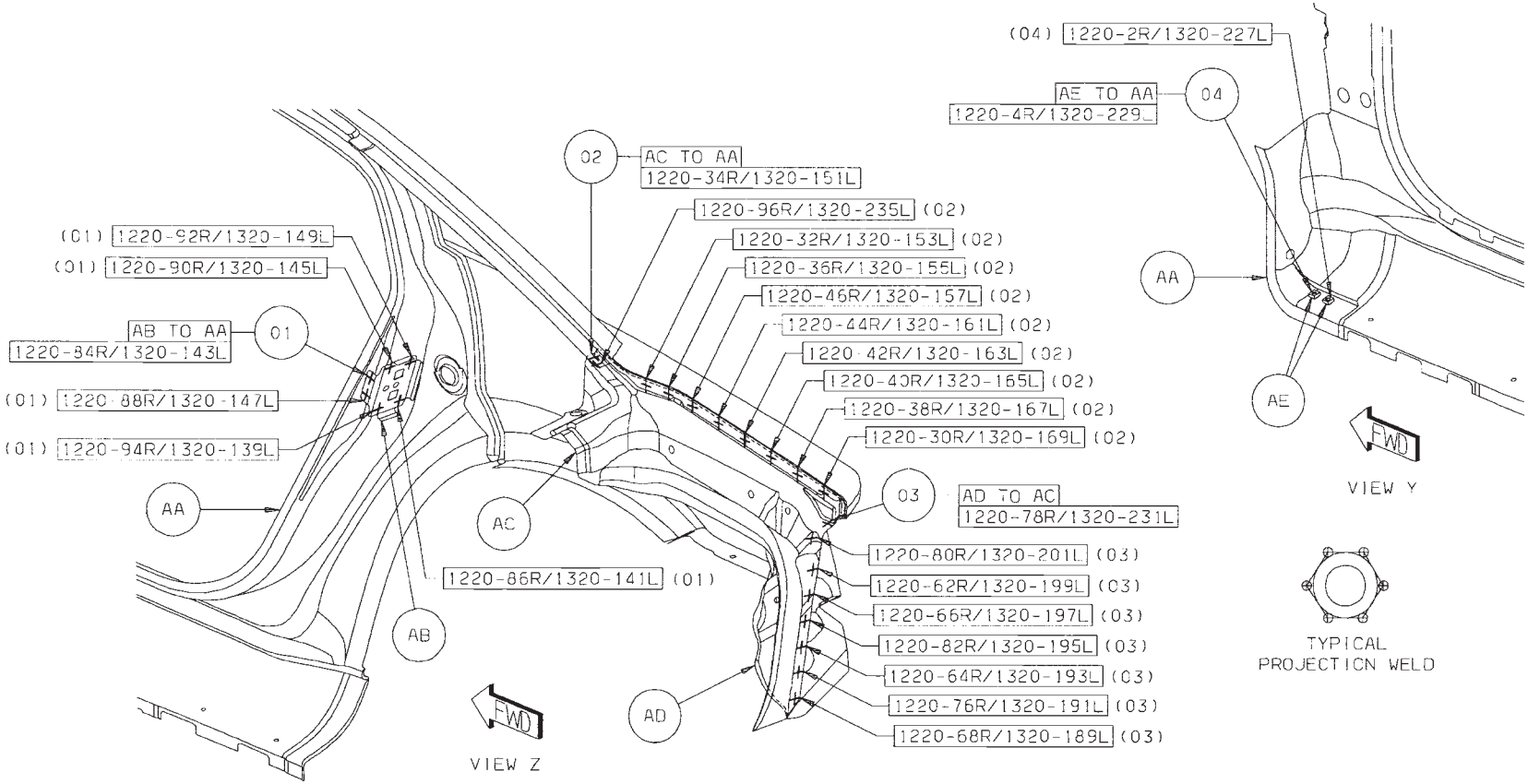

Back to Index

05 AF TO AA 6/SD S/WELDS (ORD)
06 AD TO AA 10/SD S/WELDS (ORD)
07 AF TO AD 4/SD S/WELDS (ORD)

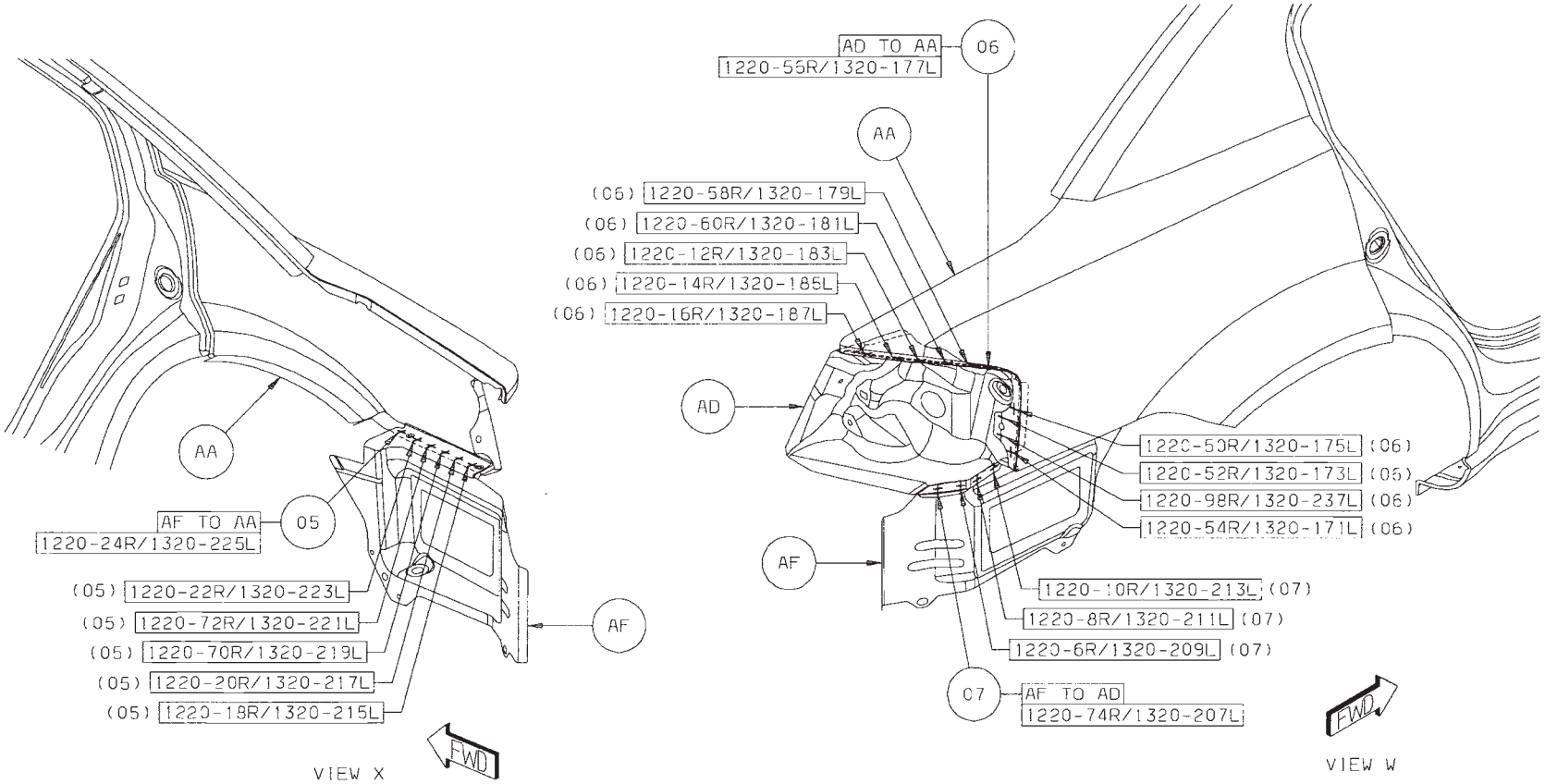

Back to Index

CHRYSLER SEBRING BODY SIDE APERTURE OUTER SECTION

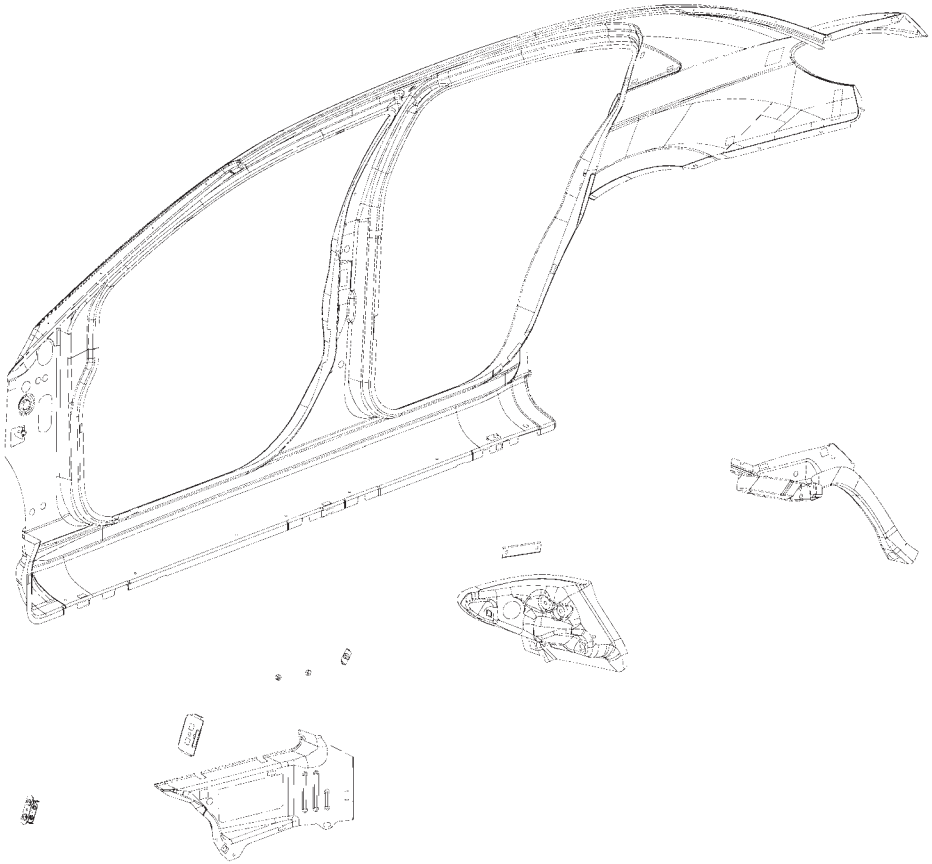

AA PANEL – BODY SIDE APERTURE RT –
AA PANEL – BODY SIDE APERTURE LT –
AB REINF – STRIKER PLATE RR –
AC TROUGH – QTR OTR PANEL DRAIN RT –
AC TROUGH – QTR OTR PANEL DRAIN LT –
AD EXTENSION – QTR PANEL TAIL LAMP RT –
AD EXTENSION – QTR PANEL TAIL LAMP LT –
AE EXTENSION – BODY SIDE RT –
AE EXTENSION – BODY SIDE LT –

Back to Index

PARTS IDENTIFICATION LEGEND, OVERVIEW 29

AA PANEL – BODY SIDE APERTURE RT –
AA PANEL – BODY SIDE APERTURE LT –
AB REINF – STRIKER PLATE RR –
AC TROUGH – QTR OTR PANEL DRAIN RT –
AC TROUGH – QTR OTR PANEL DRAIN LT –
AD EXTENSION – QTR PANEL TAIL LAMP RT –
AD EXTENSION – QTR PANEL TAIL LAMP LT –
AE EXTENSION – BODY SIDE RT –
AE EXTENSION – BODY SIDE LT –

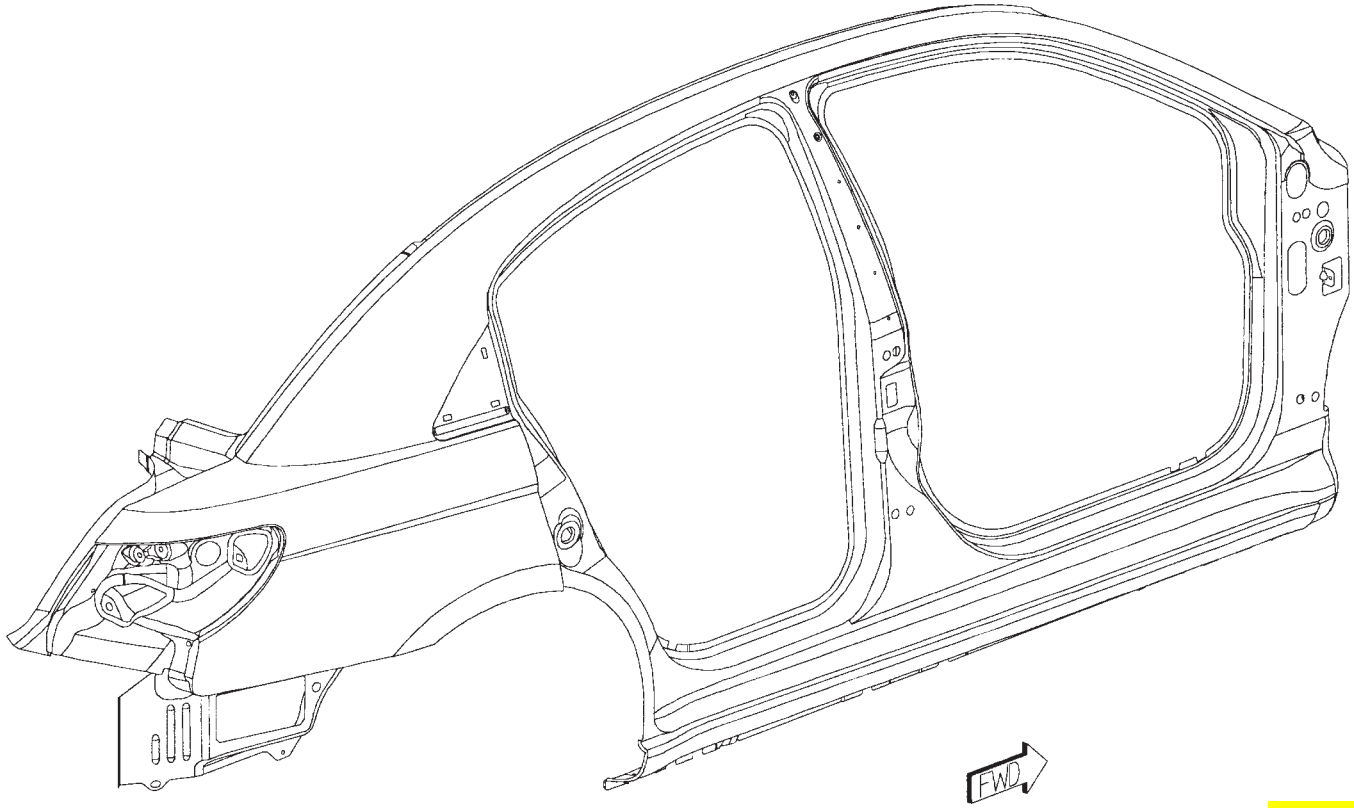

Back to Index

WELD LAYOUT LOCATION GUIDE

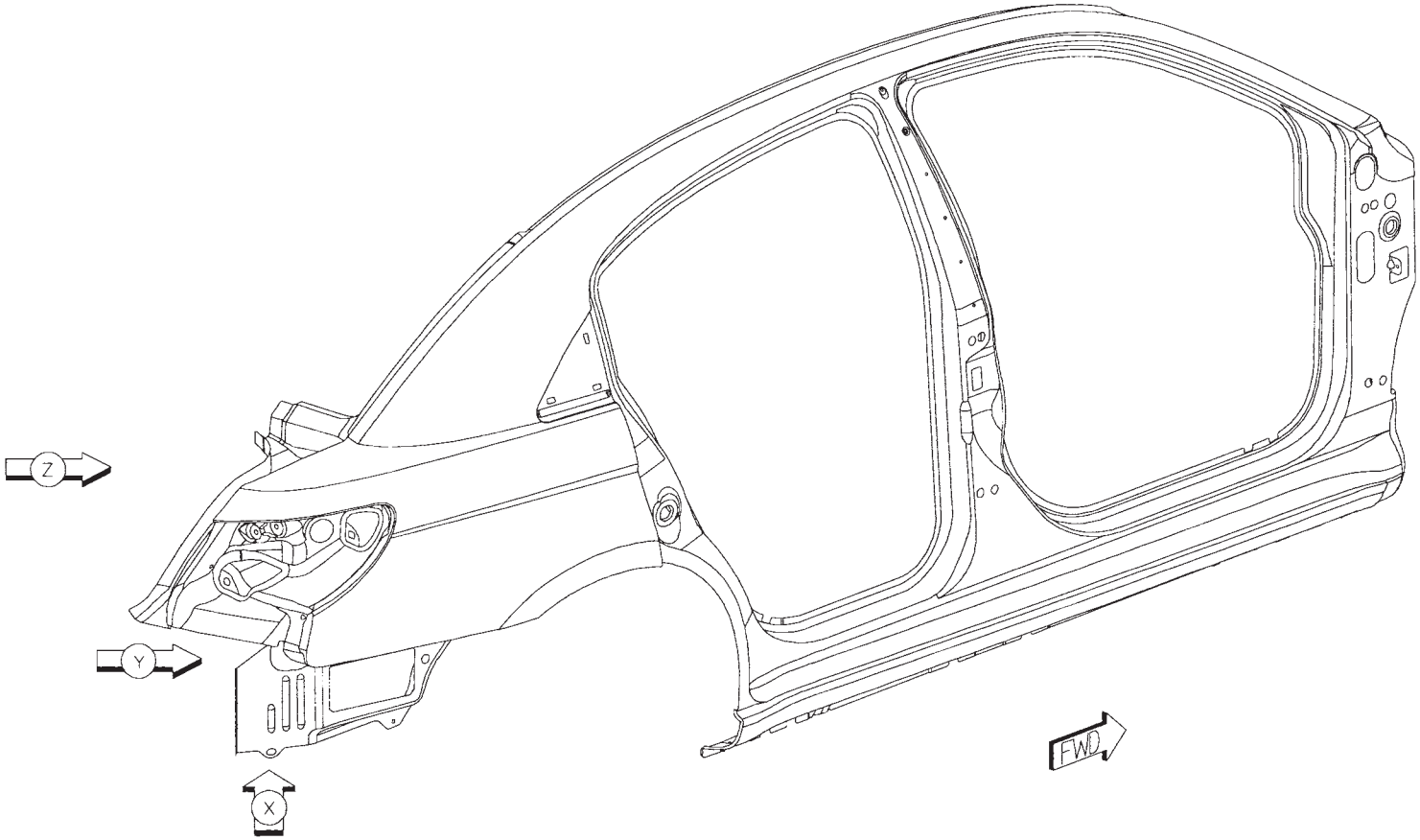

Back to Index

01 AB TO AA 6/SD S/WELDS (ORD)
02 AC TO AA 8/SD S/WELDS (ORD)
03 AD TO AC 5/SD S/WELDS (ORD)

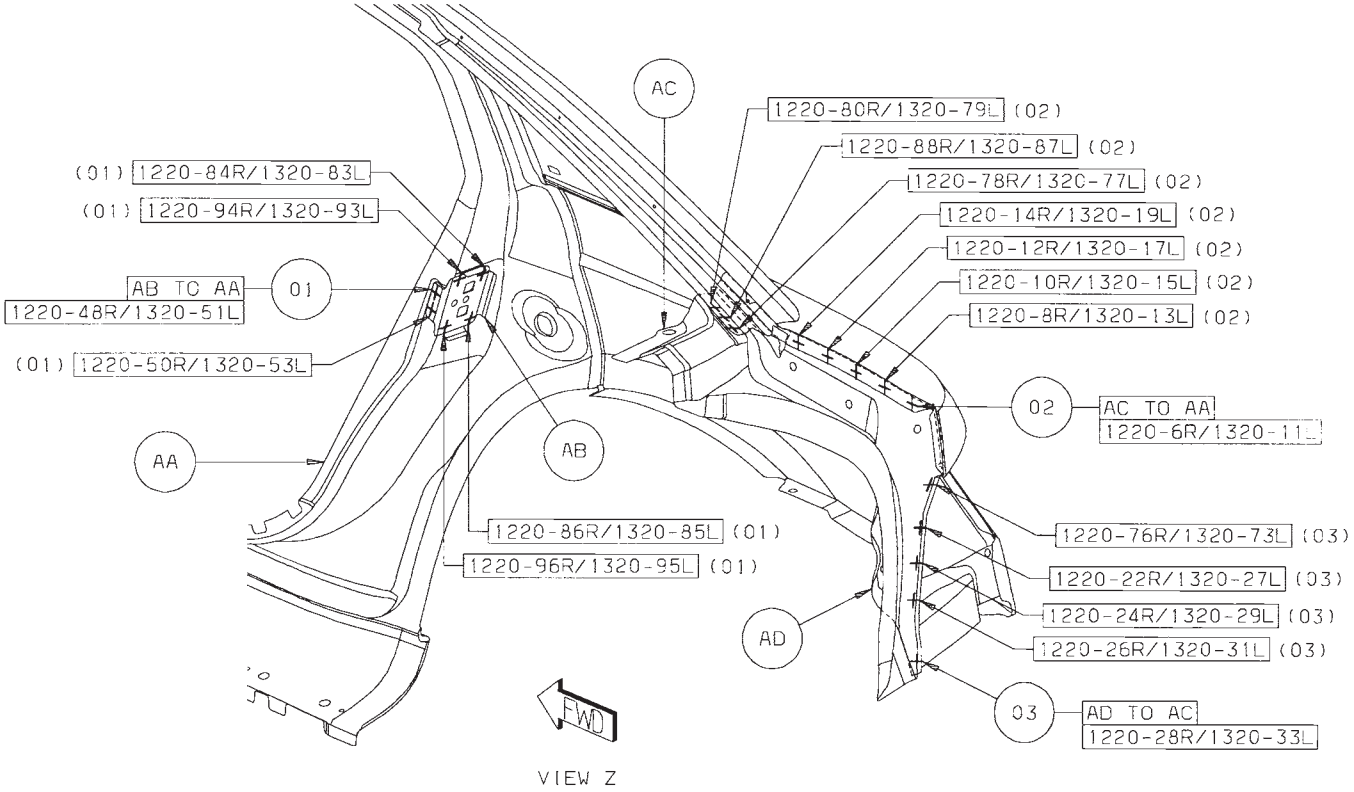

Back to Index

04 AE TO AA 8/SD S/WELDS (ORD)
05 AE TO AD 1/SD S/WELD (ORD)
06 AD TO AA 11/SD S/WELDS (ORD)
07 AE TO AD TO AA 1/SD S/WELD (ORD)

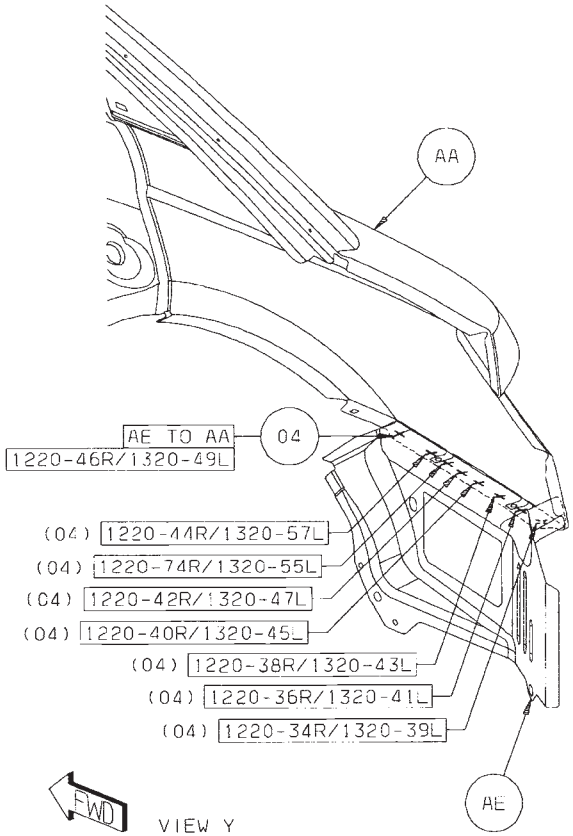

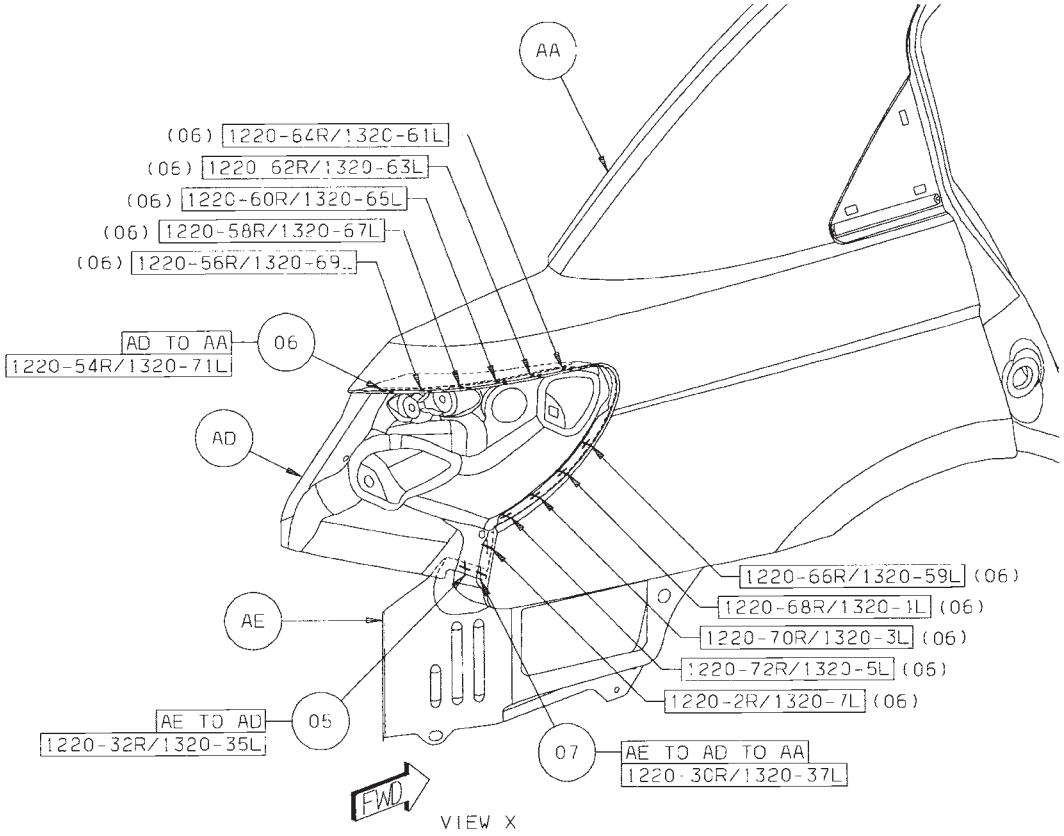

Back to Index

CHRYSLER SEBRING
DODGE AVENGER
BODY REPAIR MANUAL

SAFETY NOTICE

CAUTION

ALL SERVICE AND REBUILDING INSTRUCTIONS CONTAINED HEREIN ARE APPLICABLE TO, AND FOR THE CONVENIENCE OF, THE AUTOMOTIVE TRADE ONLY. All test and repair procedures on components or assemblies in non-automotive applications should be repaired in accordance with instructions supplied by the manufacturer of the total product.

Proper service and repair is important to the safe, reliable operation of all motor vehicles. The service produces recommended and described in this publication were developed for professional service personnel, and are effective methods for performing vehicle repair. Following these procedures will help ensure efficient economical vehicle performance and service reliability. Some service procedures require the use of special tools designed for specific procedures. These special tools should be used as recommended throughout this publication.

Special attention should be exercised when working with spring-or tension-loaded fasteners and devices such as E-Clips, Circlips, Snap rings, etc., since careless removal may cause personal injury. Always wear safety goggles when working on vehicles or vehicle components.

It is important to note that this publication contains various Cautions and Warnings. These should be read carefully in order to minimize risk of personal injury or the possibility that improper service methods may damage the vehicle or render it unsafe. It is important to note that these Cautions and Warnings cover only the situations and procedures DaimlerChrysler Corporation has encountered and recommended. DaimlerChrysler Corporation cannot possibly know, evaluate, and advise the service trade of all conceivable ways in which service may be performed, or of the possible hazards of each. Consequently, DaimlerChrysler has not undertaken any such broad service review. Accordingly, anyone uses a service procedure or tool that is not recommended in this publication must be certain that neither personal safety, nor vehicle safety, will be jeopardized by the service methods they select.

Back to Index

USE OF HEAT DURING REPAIR

WARNING: Chrysler Group engineering's position on the use of heat during collision repair is as follows:

- **Any body panel or frame component damaged which is to be repaired and reused, must be repaired using the "cold straightening" method. No heat may be used during the straightening process.**
- **During rough straightening prior to panel replacement, damaged panels or frame components may be heated to assist in body/frame realignment. The application of heat must be constrained to the parts which will be replaced and not allowed to affect any other components.**

This "no heat" recommendation is due to the extensive use of high strength and advanced high strength steels in Chrysler Group products. High-strength materials can be substantially and negatively affected from heat input which will not be obviously known to the repairer or consumer.

Ignoring these recommendations may lead to serious compromises in the ability to protect occupants in a future collision event, reduce the engineered qualities and attributes, or decrease the durability and reliability of the vehicle.

Failure to follow these instructions may be result in serious or fatal injury.

This statement supersedes any previously released information by the Chrysler Group.

Back to Index

CHRYSLER SEBRING CONVERTIBLE BODY REPAIR MANUAL

SAFETY NOTICE

CAUTION

ALL SERVICE AND REBUILDING INSTRUCTIONS CONTAINED HEREIN ARE APPLICABLE TO, AND FOR THE CONVENIENCE OF, THE AUTOMOTIVE TRADE ONLY. All test and repair procedures on components or assemblies in non-automotive applications should be repaired in accordance with instructions supplied by the manufacturer of the total product.

Proper service and repair is important to the safe, reliable operation of all motor vehicles. The service produces recommended and described in this publication were developed for professional service personnel, and are effective methods for performing vehicle repair. Following these procedures will help ensure efficient economical vehicle performance and service reliability. Some service procedures require the use of special tools designed for specific procedures. These special tools should be used as recommended throughout this publication.

Special attention should be exercised when working with spring-or tension-loaded fasteners and devices such as E-Clips, Circlips, Snap rings, etc., since careless removal may cause personal injury. Always wear safety goggles when working on vehicles or vehicle components.

It is important to note that this publication contains various Cautions and Warnings. These should be read carefully in order to minimize risk of personal injury or the possibility that improper service methods may damage the vehicle or render it unsafe. It is important to note that these Cautions and Warnings cover only the situations and procedures Chrysler LLC has encountered and recommended. Chrysler LLC cannot possibly know, evaluate, and advise the service trade of all conceivable ways in which service may be performed, or of the possible hazards of each. Consequently, Chrysler LLC has not undertaken any such broad service review. Accordingly, anyone uses a service procedure or tool that is not recommended in this publication must be certain that neither personal safety, nor vehicle safety, will be jeopardized by the service methods they select.

Back to Index

USE OF HEAT DURING REPAIR

WARNING: Chrysler LLC engineering's position on the use of heat during collision repair is as follows:

- **Any body panel or frame component damaged which is to be repaired and reused, must be repaired using the "cold straightening" method. No heat may be used during the straightening process.**
- **During rough straightening prior to panel replacement, damaged panels or frame components may be heated to assist in body/frame realignment. The application of heat must be constrained to the parts which will be replaced and not allowed to affect any other components.**

This "no heat" recommendation is due to the extensive use of high strength and advanced high strength steels in Chrysler LLC products. High-strength materials can be substantially and negatively affected from heat input which will not be obviously known to the repairer or consumer.

Ignoring these recommendations may lead to serious compromises in the ability to protect occupants in a future collision event, reduce the engineered qualities and attributes, or decrease the durability and reliability of the vehicle.

Failure to follow these instructions may be result in serious or fatal injury.

This statement supersedes any previously released information by Chrysler LLC.

Back to Index

Corrosion Protection

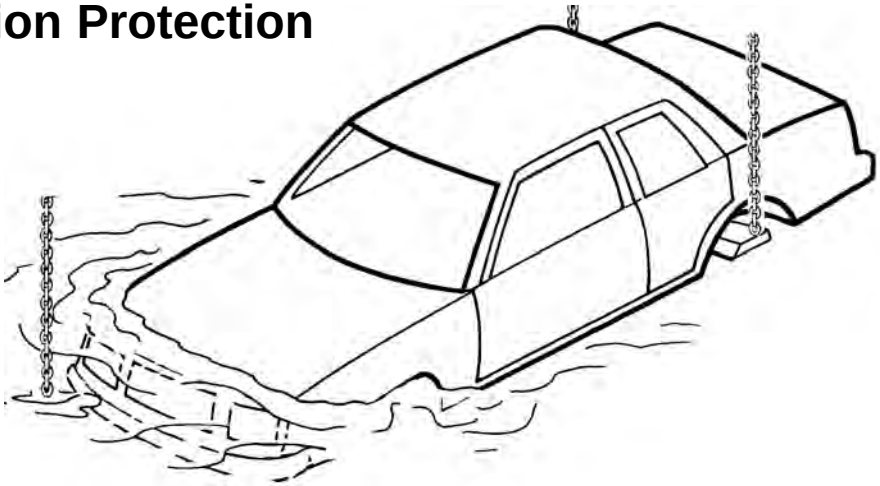

Factory Applied Corrosion Protection

During the manufacturing of the unibody car, the manufacturer applies "corrosion protection" using specialized manufacturing processes. This system is not duplicated in the collision repair body shop. However, the body shop still has a responsibility to apply corrosion protection to the unibody vehicle. So, the collision repair shop must use alternative materials to do the corrosion protection job after the repair.

This corrosion protection is required regardless of the environment and weather conditions the vehicle will be operated in. Corrosion protection is as important in the desert as it is at the seaside. Corrosion damage can literally destroy the structural integrity of a unibody vehicle from within. Many corrosion protection systems are destroyed during collision repair operations. Metal finishing, metal working and fatigue can cause the breakdown of many of the corrosion barriers installed at the factory. The use of heat for stress relief and welding also destroys factory installed corrosion barriers. These corrosion barriers and corrosion protection systems must be replaced after collision repair to ensure that the structural integrity of the unibody will remain intact throughout its life. In the past, only vehicles with aftermarket or after delivery corrosion protection systems installed were serviced after collision repair to restore the corrosion protection system.

An understanding of the types of corrosion which affect the unibody vehicles will assist in understanding why the factory protection systems are important, how the factory protection systems consist of and how the systems' protection is replaced after collision and electrolytic corrosion. Some of the more common types of corrosion are **crevice corrosion, pitting, galvanic corrosion, stress corrosion, cracking, fretting, and erosion corrosion.**

Back to Index

Corrosion Protection

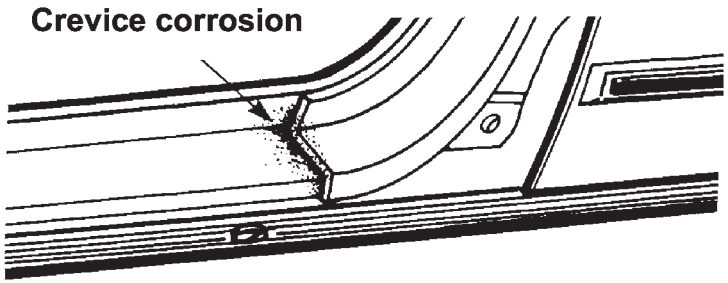

Crevice corrosion is a form of localized attack that occurs in areas on metal surfaces exposed to the elements. Examples include spot weld lap joints, threaded or riveted connections, gasket fittings, porous welds, valve seats.

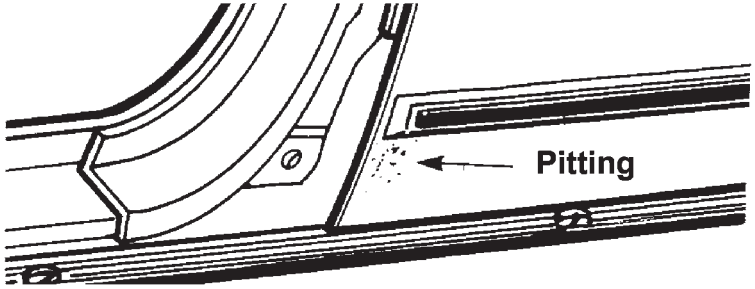

Pitting is the corrosion of a metal surface at points or small areas which look like a small hole in the metal.

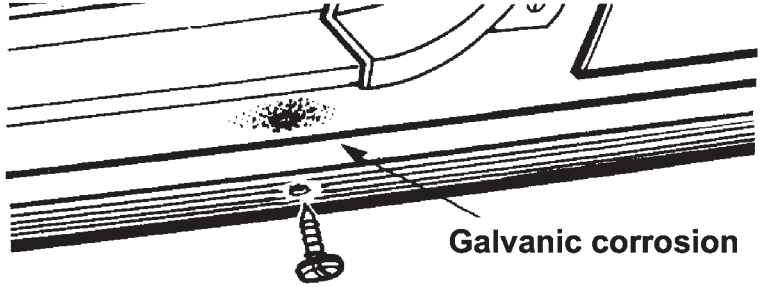

Galvanic corrosion is the type that occurs when dissimilar metals are in electrical contact while immersed in an electrolyte.

Back to Index

Corrosion Protection

The penetration of corrosive solutions into these small areas, with widths that are typically a few thousandths of an inch, can result in various types of failures: the metal surface may become rusty in appearance, operating components may seize when protective coatings may have been removed from the metal surface. The coating of zinc on steel, known as galvanized, is an example of sacrificial cathodic protection.

An example of galvanic corrosion on the automobile is a stainless steel trim molding on a painted mild steel. When the paint becomes damaged, a galvanic corrosion cell is formed between the passive stainless steel (cathode) and the steel (anode). The corrosion leads to what would look like a rust stain. Methods of reducing galvanic corrosion include the use of compatible materials, minimizing of cathode-to-anode areas, the insulation of dissimilar metal contacts and the use of thick, replaceable sections.

Stress corrosion, cracking, fretting, and erosion corrosion.

Corrosion cracking is the early cracking of metals produced by the combined action of tensile stress and a corrosive atmosphere.

Corrosion fatigue is cracking due to the action of stresses and corrosion. Methods of reducing corrosion fatigue include the reduction in stress and the use of coatings.

Fretting is the deterioration of a metal at contact surfaces due to the presence of a corrosive and relative motion between the surfaces. The two metal surfaces initially are covered with an oxide film that becomes abraded during vibration. The results are oxide particles that become corroded. During the collision repair process, the factory protection materials become damaged from working the metals, or from the use of heat in the repair operations. If these factory protection materials are not replaced with some similar protection material after repair, a corrosion hot spot is formed. A corrosion hot spot is a small unprotected area surrounded by a protected area throughout the rest of the vehicle. the hot spot effect causes rapid deterioration of the unprotected area. This deterioration takes place at a much faster rate, sometimes 10-12 times faster than if the entire car were unprotected. The hot spot effect is created because all the corrosive factors are channeled to the unprotected area much the same way all material flowing through a funnel is concentrated in a small area. This hot spot effect means that corrosion failures to the unibody structure could occur in a short period of time even in an atmosphere normally not subject to corrosion. The hot spot effect can cause rapid deterioration of unibody structures from corrosion damage in a desert as well as seaside.

Back to Index

Corrosion Protection

The types of materials used in rustproofing application include oil based materials, wax base materials, primers and color coats. The most important properties of rustproofing materials are adhesion, toughness, and the resistance to the environment. The best coating in the world is not effective unless it is present in the right place at the right time.

Corrosion Protection Information

When making the collision repair, refer to the manufacturer's information on where corrosion protection and sealants are applied. Be sure to follow the recommendations. The application process is usually included with the material manufacturer's information so be sure to read and understand it before proceeding with the repair.

Collision Repair Corrosion Protection Materials

The materials must provide good **electrolyte barriers.** The material must also be able to penetrate **tiny crevices** and prevent **abrasive corrosion.** The material must be **compatible** with **paint systems** as many areas of the car must be treated before paint is applied.

Materials containing silicones will cause paint conditions such as fish eyes if they are applied before the repaired vehicle is painted. So no silicone containing material is to be used. As many of the repair areas are more accessible before final assembly and painting, the non-silicone type materials are a must for this type of application.

When protecting an enclosed area, fog type properties for the corrosion protection material are a plus. The fog properties make the material much less susceptible to operator error or misapplication. With a fog type material, once the material is introduced inside of an enclosure, the fog spreads rapidly and evenly into all areas including tiny crevices. The fog type materials do not require direct spray application to be effective. Fog type materials are also very effective in coating over any existing rusted or corrosion damaged areas and preventing further corrosion of these areas. This is especially important on repairs of older vehicles.

Back to Index

Corrosion Protection

Spray Accessibility to the Repair

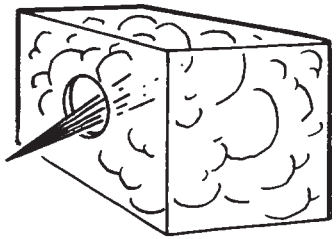

Being able to achieve fog spray penetration into enclosed cavities as well as open areas requires application equipment, which includes an assortment of wands of various lengths and design.

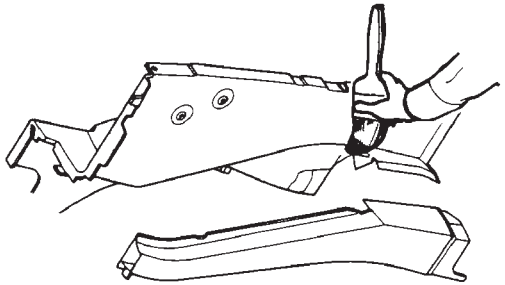

Some areas are more effectively treated by brush application of corrosion protection material before they are assembled. A good example of this is an inner and outer engine compartment side rail area. Brush application to the inside of these areas as individual pieces is easy before assembly and can be followed by a light fog application to the weld areas and the crevices formed during assembly after the rails are assembled. Brush application keeps the foreign material from getting between welded joints during assembly yet gives good coverage to general areas with easy application. The material selected in addition to paint compatibility features and fog application features is also an excellent brush application material. Repaired areas, boxed in or closed in are more easily treated during assembly using fog and brush on techniques. Care must be taken to keep the corrosion materials away from the welding areas as welding contamination might take place. Brush-on applications are used before welding and fog in applications are used after welding assemblies together.

Back to Index

Corrosion Protection

Desired Characteristics of Corrosion Protection Material

1. Corrosion prevention material- The material must displace water to prevent corrosion. This can be tested by spraying water on an open panel on the floor, then spraying the corrosion preventative material over the watered panel and observing if the material displaces the water.

2. Creepage of material- To insure thorough and complete protection coverage, the material should have a "creep" capability, approximately 1/4 inch per minute while drying. This assures protective penetration of pinch welds, cracks, etc.

3. Safe material- Material should be non-combustible when dried and when wet unable to support a fire after ignition.

4. Clean-up- The material should be of a viscosity which inhibits runs or drips. Overspray on a vehicle's painted surface should wipe off easily without solvent when wet, with solvent when dry. The material should also dry clean off clothing.

5. Guarantee/Warranty- The corrosion protection has to be done to maintain factory corrosion warranty. Manufacturer's recommendations must be followed.

Glossary:
Abrasion Corrosion - Rubbing or hitting of one material by another
Corrosion Protection - Material applied to deter corrosion (oxidation)
Crevice Corrosion - Oxidation when two metals are joined
Electrolytic Corrosion - Electrical action taking place between two materials in the presence of an electrolyte (liquid)
Fogging - Applying material in a mist form
Fretting - Deterioration of metal at contact surfaces due to motion and corrosive elements
Galvanic Corrosion - Electrical action (electrolysis) between two dissimilar metals in the presence of electrolyte (liquid)
Hot Spot - An unprotected area subject to corrosion
Pitting Corrosion - Corrosion on a surface the results in a small "specks" or "pinholes"
Stress of Fatigue, Cracking Corrosion - Cracking due to stress and atmospheric elements

Back to Index

Corrosion Protection

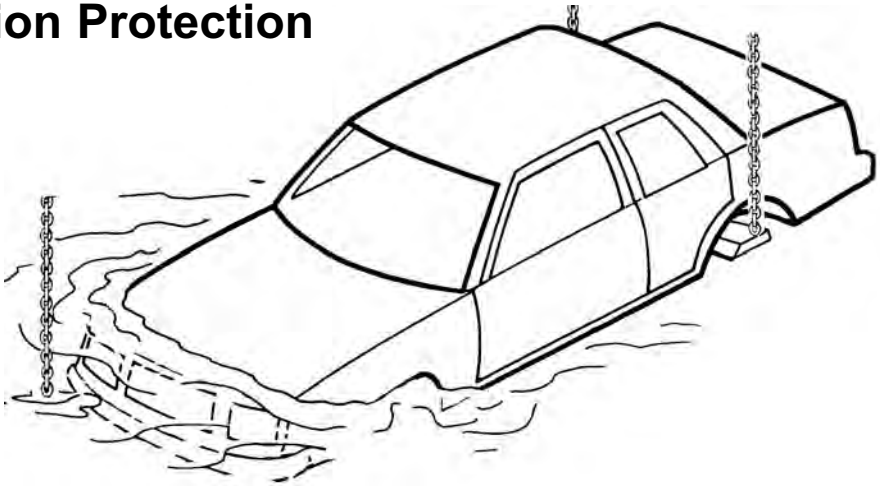

Factory Applied Corrosion Protection

During the manufacturing of the unibody car, the manufacturer applies "corrosion protection" using specialized manufacturing processes. This system is not duplicated in the collision repair body shop. However, the body shop still has a responsibility to apply corrosion protection to the unibody vehicle. So, the collision repair shop must use alternative materials to do the corrosion protection job after the repair.

This corrosion protection is required regardless of the environment and weather conditions the vehicle will be operated in. Corrosion protection is as important in the desert as it is at the seaside. Corrosion damage can literally destroy the structural integrity of a unibody vehicle from within. Many corrosion protection systems are destroyed during collision repair operations. Metal finishing, metal working and fatigue can cause the breakdown of many of the corrosion barriers installed at the factory. The use of heat for stress relief and welding also destroys factory installed corrosion barriers. These corrosion barriers and corrosion protection systems must be replaced after collision repair to ensure that the structural integrity of the unibody will remain intact throughout its life. In the past, only vehicles with aftermarket or after delivery corrosion protection systems installed were serviced after collision repair to restore the corrosion protection system.

An understanding of the types of corrosion which affect the unibody vehicles will assist in understanding why the factory protection systems are important, how the factory protection systems consist of and how the systems' protection is replaced after collision and electrolytic corrosion. Some of the more common types of corrosion are **crevice corrosion, pitting, galvanic corrosion, stress corrosion, cracking, fretting, and erosion corrosion.**

Back to Index

Corrosion Protection

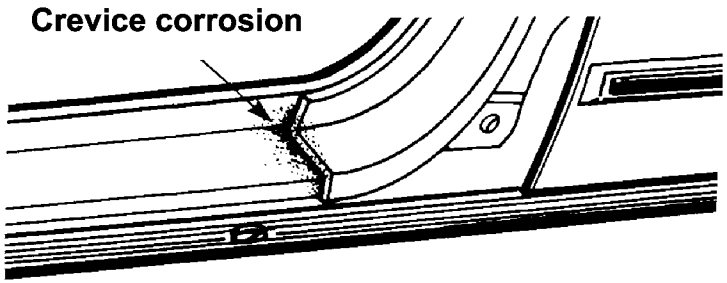

Crevice corrosion is a form of localized attack that occurs in areas on metal surfaces exposed to the elements. Examples include spot weld lap joints, threaded or riveted connections, gasket fittings, porous welds, valve seats.

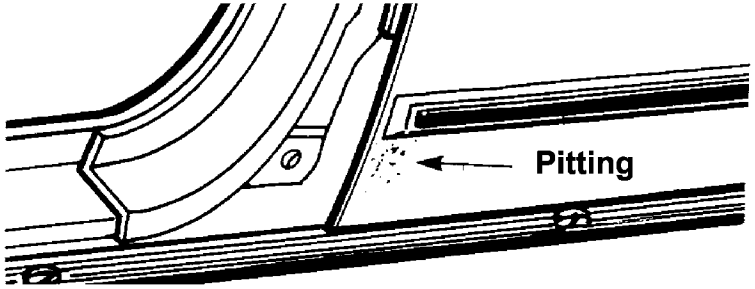

Pitting is the corrosion of a metal surface at points or small areas which look like a small hole in the metal.

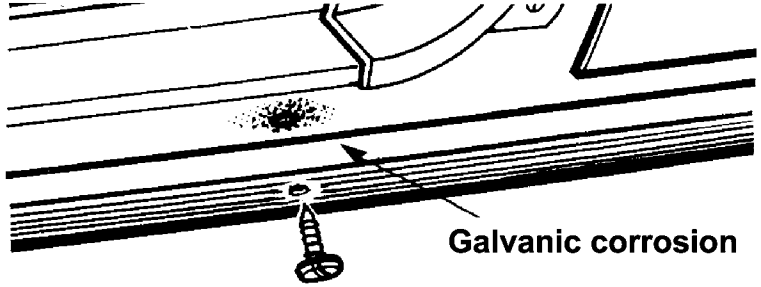

Galvanic corrosion is the type that occurs when dissimilar metals are in electrical contact while immersed in an electrolyte.

Back to Index

Corrosion Protection

The penetration of corrosive solutions into these small areas, with widths that are typically a few thousandths of an inch, can result in various types of failures: the metal surface may become rusty in appearance, operating components may seize when protective coatings may have been removed from the metal surface. The coating of zinc on steel, known as galvanized, is an example of sacrificial cathodic protection.

An example of galvanic corrosion on the automobile is a stainless steel trim molding on a painted mild steel. When the paint becomes damaged, a galvanic corrosion cell is formed between the passive stainless steel (cathode) and the steel (anode). The corrosion leads to what would look like a rust stain. Methods of reducing galvanic corrosion include the use of compatible materials, minimizing of cathode-to-anode areas, the insulation of dissimilar metal contacts and the use of thick, replaceable sections.

Stress corrosion, cracking, fretting, and erosion corrosion.

Corrosion cracking is the early cracking of metals produced by the combined action of tensile stress and a corrosive atmosphere.

Corrosion fatigue is cracking due to the action of stresses and corrosion. Methods of reducing corrosion fatigue include the reduction in stress and the use of coatings.

Fretting is the deterioration of a metal at contact surfaces due to the presence of a corrosive and relative motion between the surfaces. The two metal surfaces initially are covered with an oxide film that becomes abraded during vibration. The results are oxide particles that become corroded. During the collision repair process, the factory protection materials become damaged from working the metals, or from the use of heat in the repair operations. If these factory protection materials are not replaced with some similar protection material after repair, a corrosion hot spot is formed. A corrosion hot spot is a small unprotected area surrounded by a protected area throughout the rest of the vehicle. the hot spot effect causes rapid deterioration of the unprotected area. This deterioration takes place at a much faster rate, sometimes 10-12 times faster than if the entire car were unprotected. The hot spot effect is created because all the corrosive factors are channeled to the unprotected area much the same way all material flowing through a funnel is concentrated in a small area. This hot spot effect means that corrosion failures to the unibody structure could occur in a short period of time even in an atmosphere normally not subject to corrosion. The hot spot effect can cause rapid deterioration of unibody structures from corrosion damage in a desert as well as seaside.

Back to Index

Corrosion Protection

The types of materials used in rustproofing application include oil based materials, wax base materials, primers and color coats. The most important properties of rustproofing materials are adhesion, toughness, and the resistance to the environment. The best coating in the world is not effective unless it is present in the right place at the right time.

Corrosion Protection Information

When making the collision repair, refer to the manufacturer's information on where corrosion protection and sealants are applied. Be sure to follow the recommendations. The application process is usually included with the material manufacturer's information so be sure to read and understand it before proceeding with the repair.

Collision Repair Corrosion Protection Materials

The materials must provide good **electrolyte barriers.** The material must also be able to penetrate **tiny crevices** and prevent **abrasive corrosion.** The material must be **compatible** with **paint systems** as many areas of the car must be treated before paint is applied.

Materials containing silicones will cause paint conditions such as fish eyes if they are applied before the repaired vehicle is painted. So no silicone containing material is to be used. As many of the repair areas are more accessible before final assembly and painting, the non-silicone type materials are a must for this type of application.

When protecting an enclosed area, fog type properties for the corrosion protection material are a plus. The fog properties make the material much less susceptible to operator error or misapplication. With a fog type material, once the material is introduced inside of an enclosure, the fog spreads rapidly and evenly into all areas including tiny crevices. The fog type materials do not require direct spray application to be effective. Fog type materials are also very effective in coating over any existing rusted or corrosion damaged areas and preventing further corrosion of these areas. This is especially important on repairs of older vehicles.

Back to Index

Corrosion Protection

Spray Accessibility to the Repair

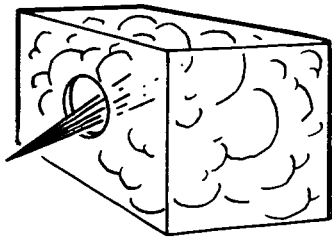

Being able to achieve fog spray penetration into enclosed cavities as well as open areas requires application equipment, which includes an assortment of wands of various lengths and design.

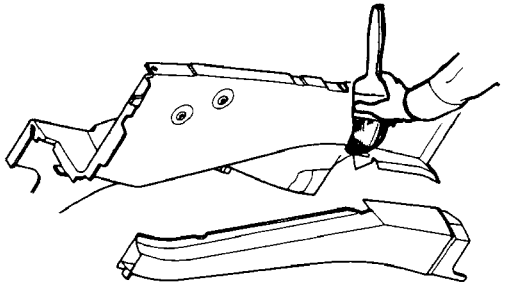

Some areas are more effectively treated by brush application of corrosion protection material before they are assembled. A good example of this is an inner and outer engine compartment side rail area. Brush application to the inside of these areas as individual pieces is easy before assembly and can be followed by a light fog application to the weld areas and the crevices formed during assembly after the rails are assembled. Brush application keeps the foreign material from getting between welded joints during assembly yet gives good coverage to general areas with easy application. The material selected in addition to paint compatibility features and fog application features is also an excellent brush application material. Repaired areas, boxed in or closed in are more easily treated during assembly using fog and brush on techniques. Care must be taken to keep the corrosion materials away from the welding areas as welding contamination might take place. Brush-on applications are used before welding and fog in applications are used after welding assemblies together.

Back to Index

Corrosion Protection

Desired Characteristics of Corrosion Protection Material

1. Corrosion prevention material- The material must displace water to prevent corrosion. This can be tested by spraying water on an open panel on the floor, then spraying the corrosion preventative material over the watered panel and observing if the material displaces the water.

2. Creepage of material- To insure thorough and complete protection coverage, the material should have a "creep" capability, approximately 1/4 inch per minute while drying. This assures protective penetration of pinch welds, cracks, etc.

3. Safe material- Material should be non-combustible when dried and when wet unable to support a fire after ignition.

4. Clean-up- The material should be of a viscosity which inhibits runs or drips. Overspray on a vehicle's painted surface should wipe off easily without solvent when wet, with solvent when dry. The material should also dry clean off clothing.

5. Guarantee/Warranty- The corrosion protection has to be done to maintain factory corrosion warranty. Manufacturer's recommendations must be followed.

Glossary:
Abrasion Corrosion - Rubbing or hitting of one material by another
Corrosion Protection - Material applied to deter corrosion (oxidation)
Crevice Corrosion - Oxidation when two metals are joined
Electrolytic Corrosion - Electrical action taking place between two materials in the presence of an electrolyte (liquid)
Fogging - Applying material in a mist form
Fretting - Deterioration of metal at contact surfaces due to motion and corrosive elements
Galvanic Corrosion - Electrical action (electrolysis) between two dissimilar metals in the presence of electrolyte (liquid)
Hot Spot - An unprotected area subject to corrosion
Pitting Corrosion - Corrosion on a surface the results in a small "specks" or "pinholes"
Stress of Fatigue, Cracking Corrosion - Cracking due to stress and atmospheric elements

Back to Index

CHRYSLER SEBRING DASH SECTION

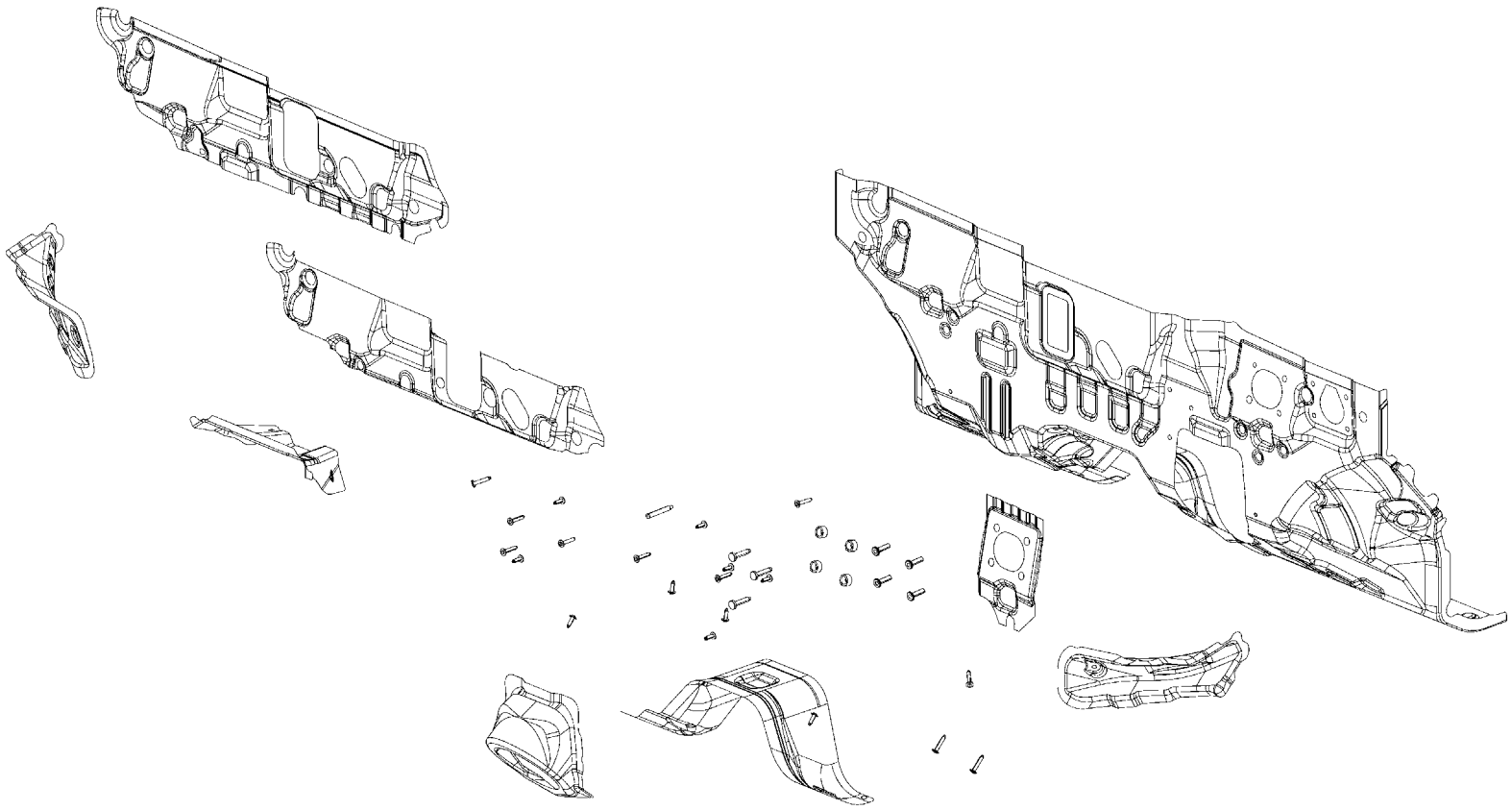

AA PANEL – DASH –
AB BRACKET – STEERING SHAFT –
AC CARRIER – PATCH –
AD CROSSMEMBER – DASH –
AD CROSSMEMBER – DASH –
AE REINF – DASH PANEL –
AF REINF – TUNNEL –
AG PANEL – DASH LWR –
AH SPACER – WELD –
AJ STUD.WELD/INTERNAL – HEADER.PT.NIBS.NO.FIN – ACC'L PEDAL TO DASH
AK STUD.WELD/INTERNAL – HEADER.PT.NIBS.NO.FIN – CLUTCH ASSY TO DASH
AL STUD.WELD/UNTHREADED – CHAMFER.PT.UNTHREADED – I/P LOCATOR
AM 06105013AA (QTY 10)
AN 06105012AA (QTY 8 + 2)

Back to Index

PARTS IDENTIFICATION LEGEND, OVERVIEW 3

AA PANEL – DASH –
AB BRACKET – STEERING SHAFT –
AC CARRIER – PATCH –
AD CROSSMEMBER – DASH –
AD CROSSMEMBER – DASH –
AE REINF – DASH PANEL –
AF REINF – TUNNEL –
AG PANEL – DASH LWR –
AH SPACER – WELD –
AJ STUD.WELD/INTERNAL – HEADER.PT.NIBS.NO.FIN – ACC'L PEDAL TO DASH
AK STUD.WELD/INTERNAL – HEADER.PT.NIBS.NO.FIN – CLUTCH ASSY TO DASH
AL STUD.WELD/UNTHREADED – CHAMFER.PT.UNTHREADED – I/P LOCATOR
AM 06105013AA (QTY 10)
AN 06105012AA (QTY 8 + 2)

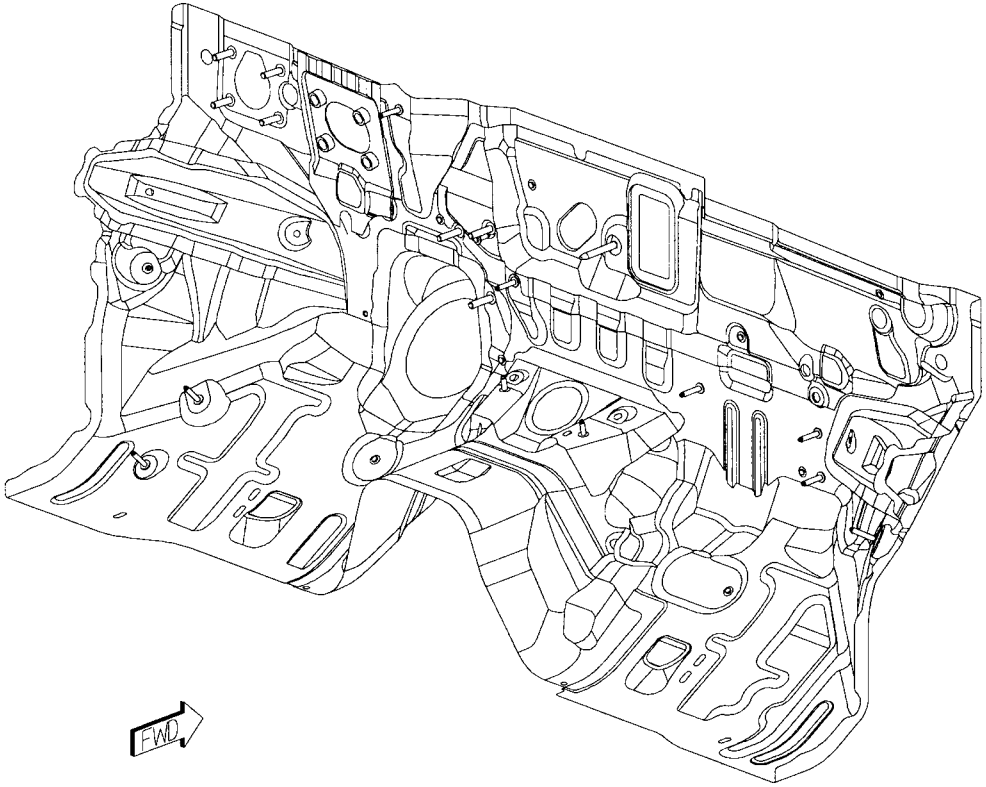

Back to Index

WELD LAYOUT LOCATION GUIDE

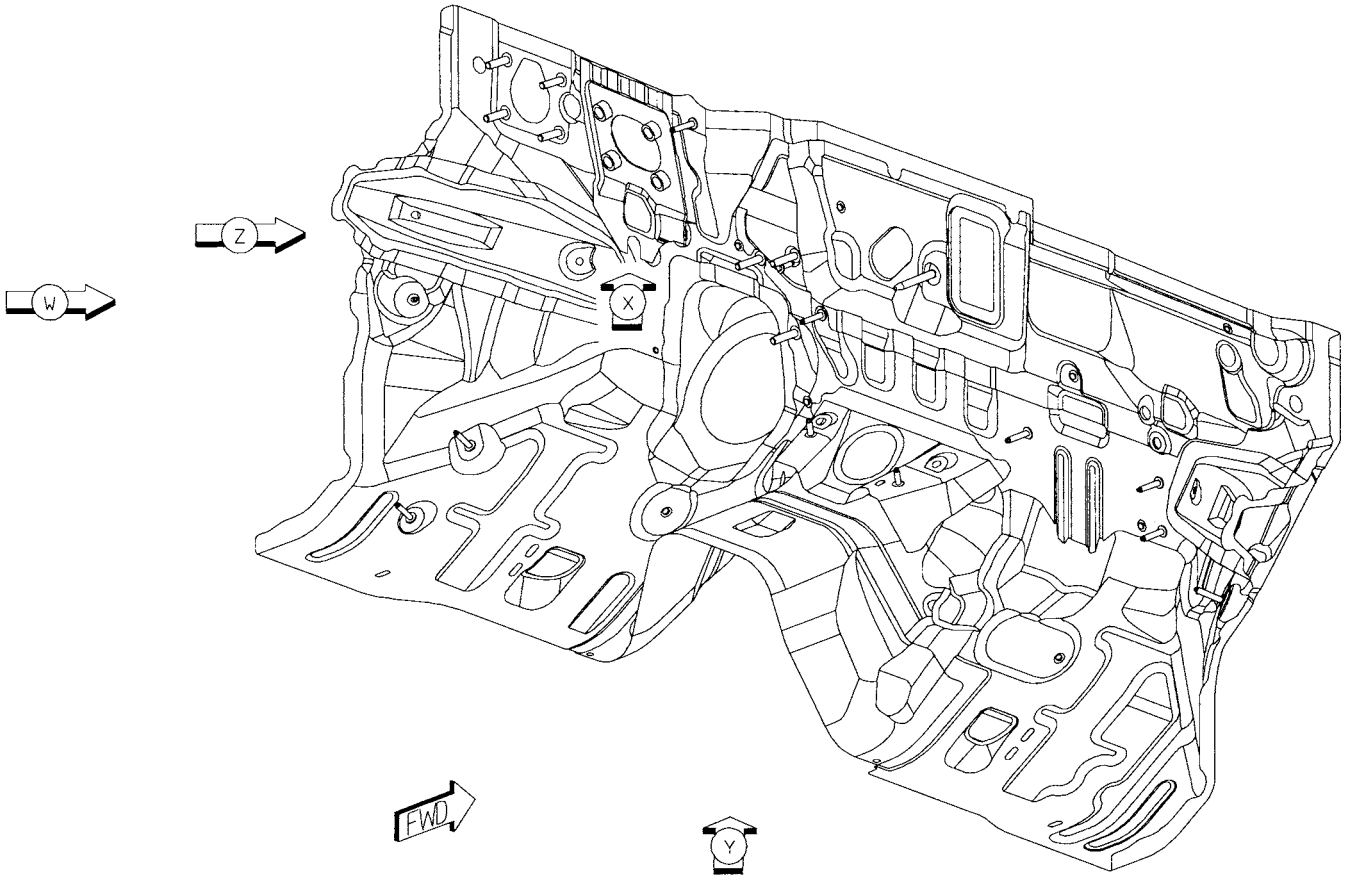

Back to Index

01 AB TO AA 9 S/WELDS (ORD)
02 AC TO AA 9 S/WELDS (CRT)
03 AD TO AA 9/SD S/WELDS (ORD)

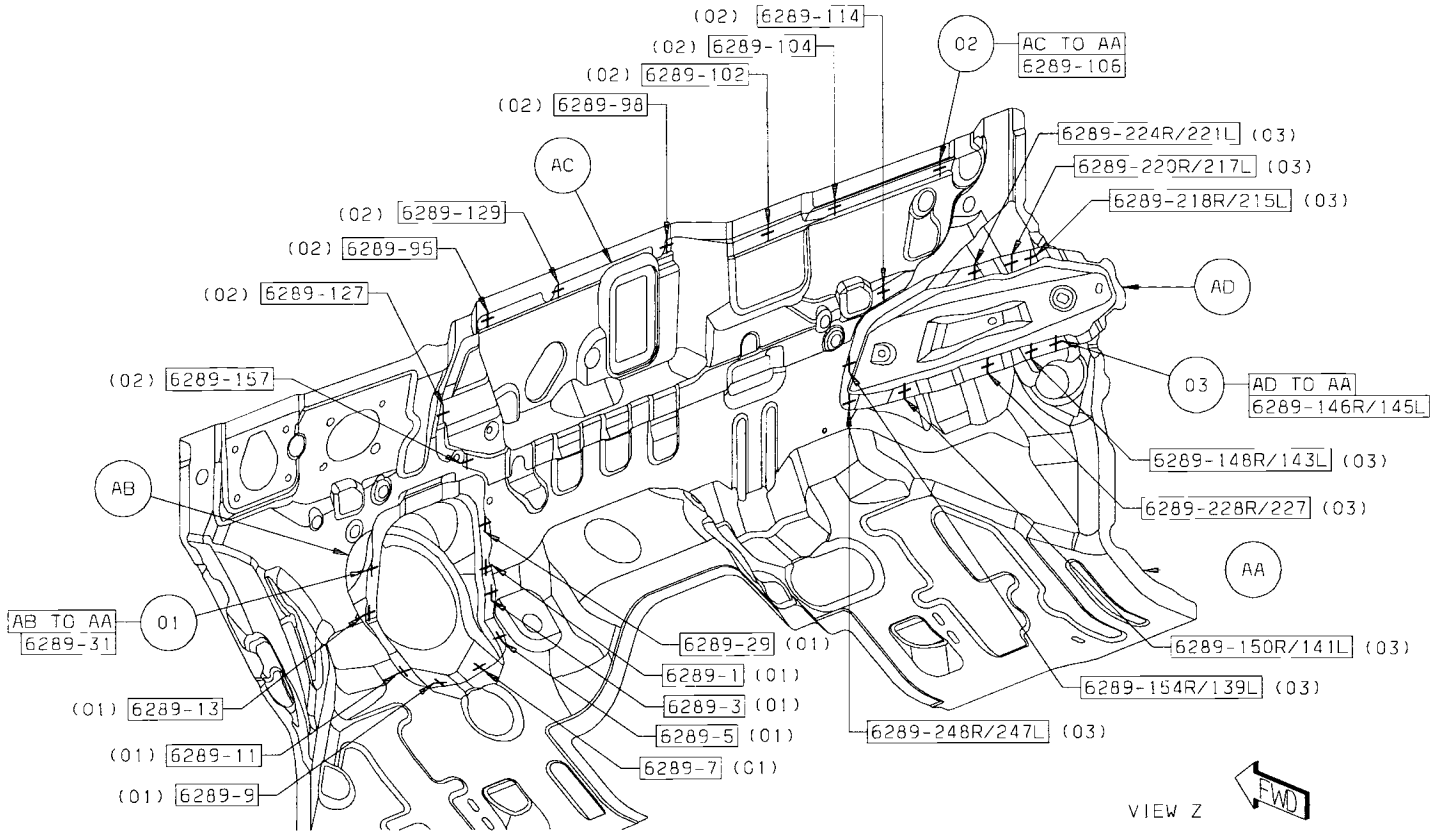

Back to Index

04 AE TO AD TO AA 1L S/WELD (ORD)
05 AE TO AA 11 S/WELDS (ORD)
06 AF TO AA 6 S/WELDS (ORD)
07 AG TO AA 11 S/WELDS (ORD)

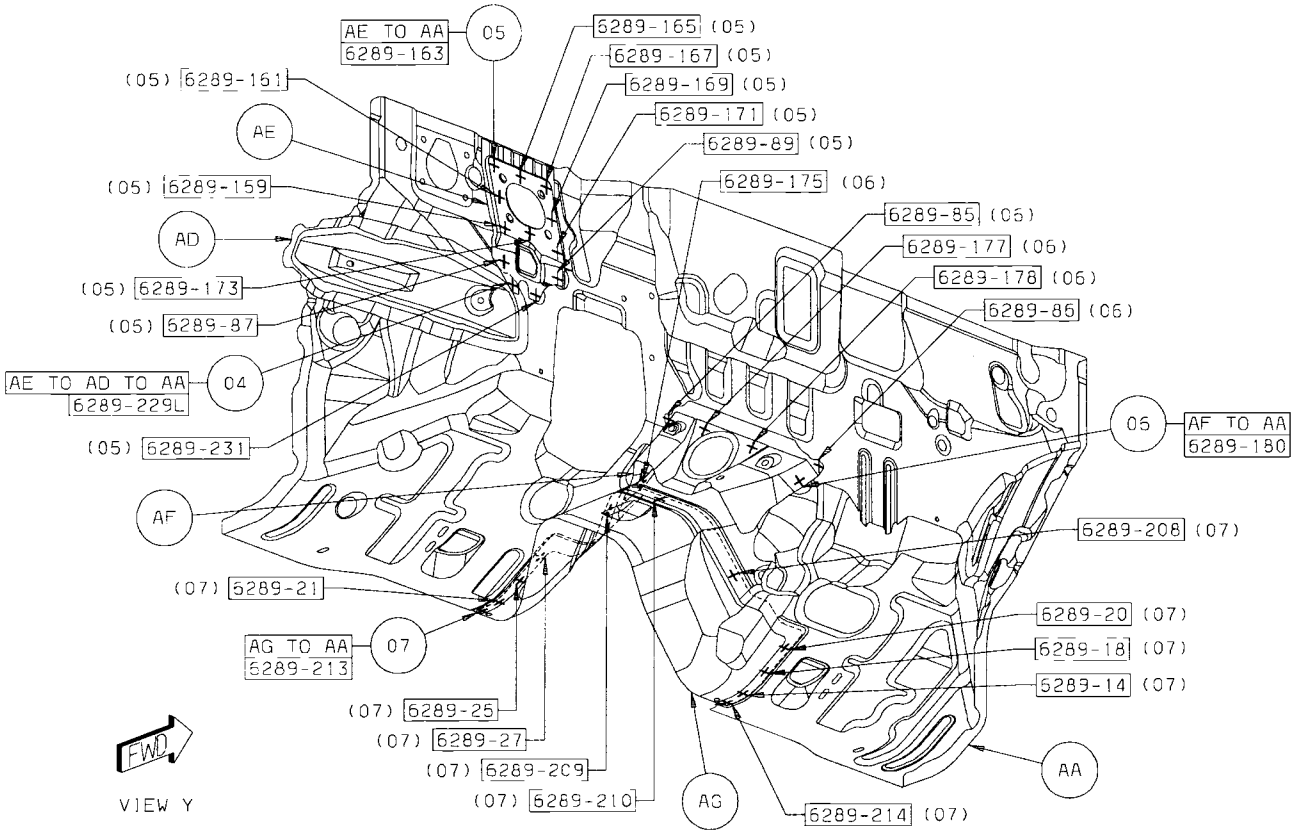

Back to Index

08 AH TO AE 4 PROJ WELDS (ORD)
09 AJ TO AA 3 PROJ WELDS (ORD)
10 AK TO AA 4 PROJ WELDS (ORD)
11 AL TO AA 1 PROJ WELD (ORD)
12 AM TO AA 11 PROJ WELDS (ORD)
13 AN TO AA 8 PROJ WELDS (ORD)
14 AN TO AF 2 PROJ WELDS (ORD)

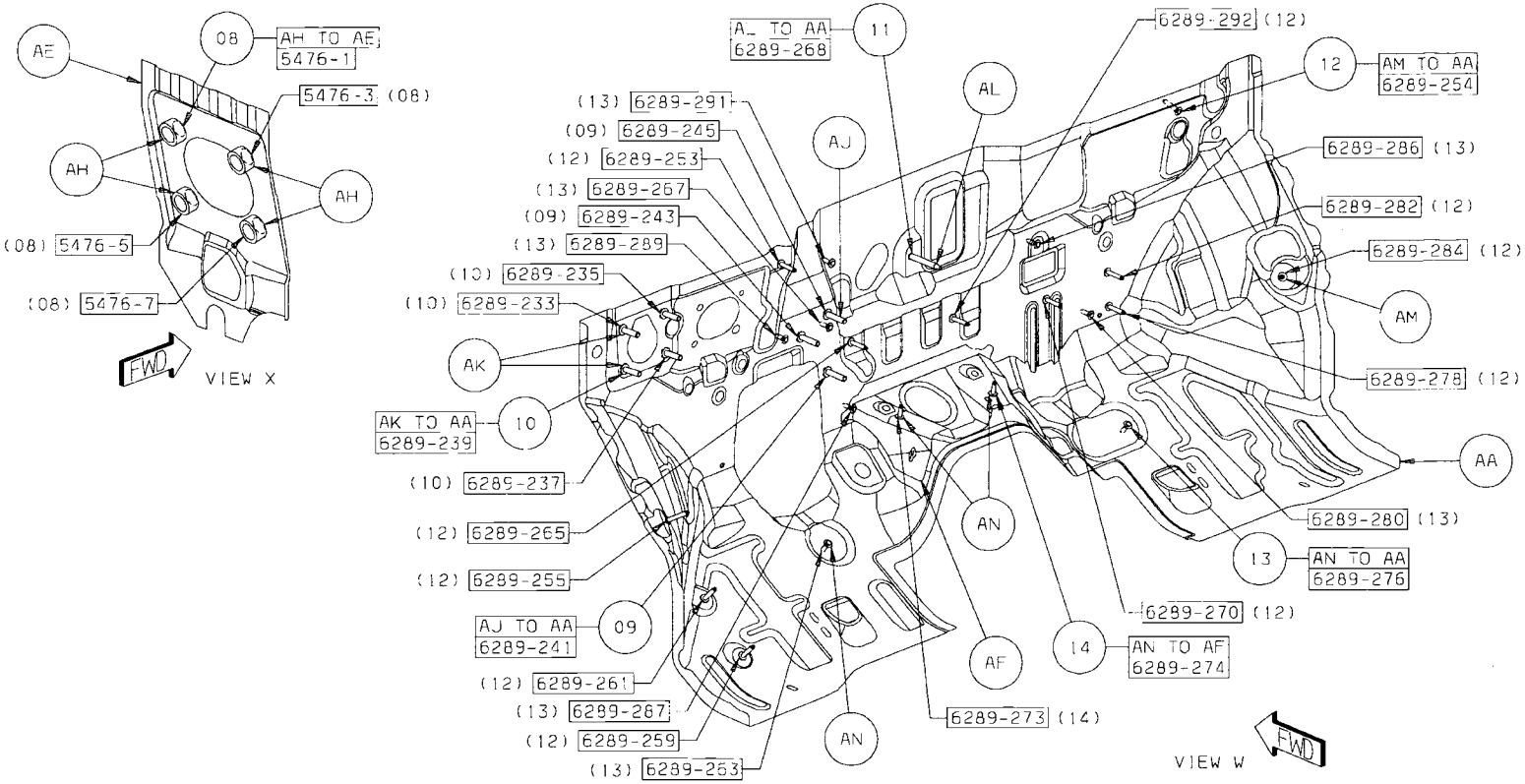

Back to Index

CHRYSLER SEBRING/DODGE AVENGER DASH (COMMON) SECTION

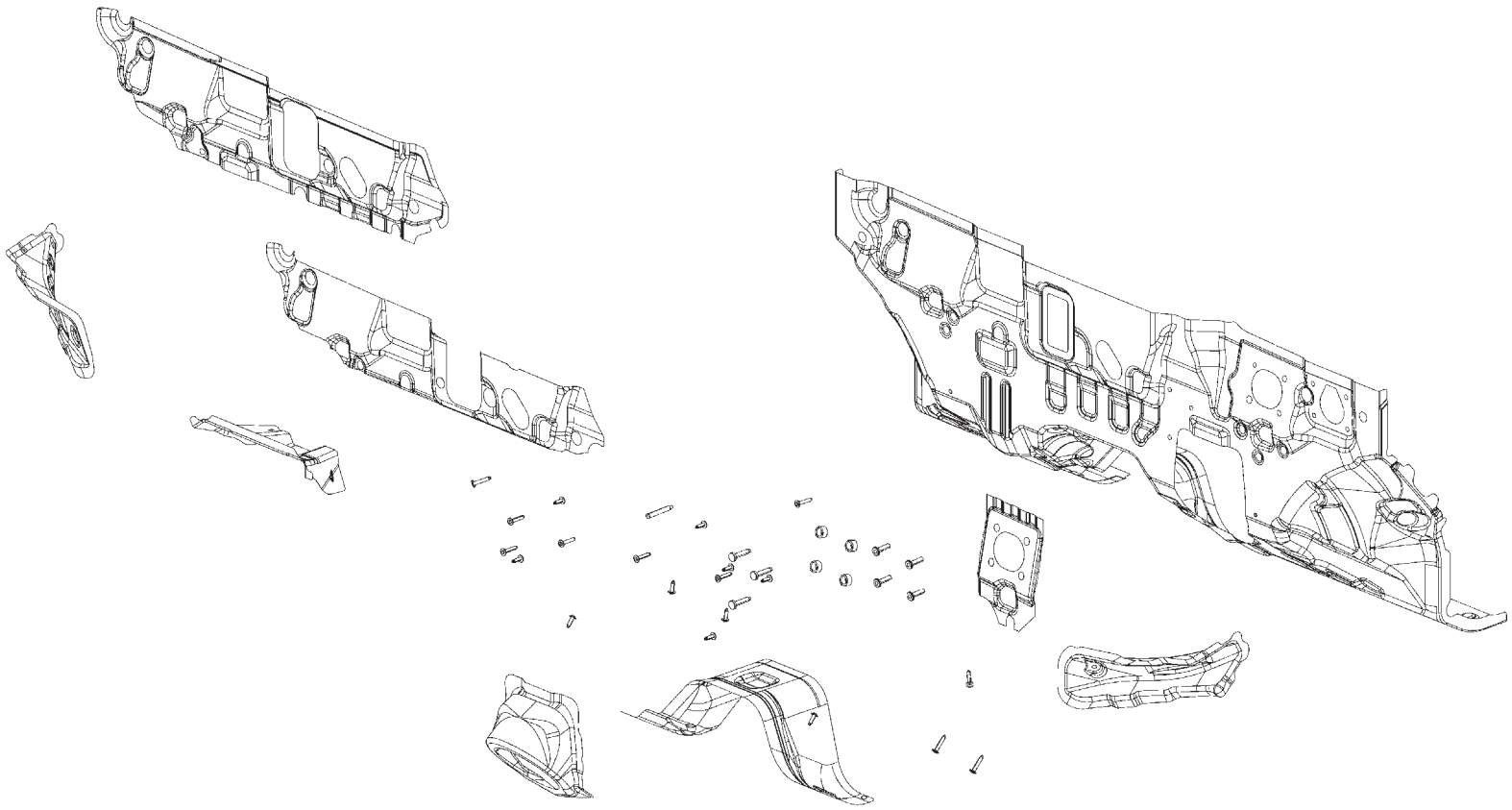

AA PANEL – DASH –
AB BRACKET – STEERING SHAFT –
AC CARRIER – PATCH –
AD CROSSMEMBER – DASH –
AD CROSSMEMBER – DASH –
AE REINF – DASH PANEL –
AF REINF – TUNNEL –
AG PANEL – DASH LWR –
AH SPACER – WELD –
AJ STUD.WELD/INTERNAL – HEADER.PT.NIBS.NO.FIN – ACC'L PEDAL TO DASH
AK STUD.WELD/INTERNAL – HEADER.PT.NIBS.NO.FIN – CLUTCH ASSY TO DASH
AL STUD.WELD/UNTHREADED – CHAMFER.PT.UNTHREADED – I/P LOCATOR
AM 06105013AA (QTY 10)
AN 06105012AA (QTY 8 + 2)

Back to Index

PARTS IDENTIFICATION LEGEND, OVERVIEW 3

AA PANEL – DASH –
AB BRACKET – STEERING SHAFT –
AC CARRIER – PATCH –
AD CROSSMEMBER – DASH –
AD CROSSMEMBER – DASH –
AE REINF – DASH PANEL –
AF REINF – TUNNEL –
AG PANEL – DASH LWR –
AH SPACER – WELD –
AJ STUD.WELD/INTERNAL – HEADER.PT.NIBS.NO.FIN – ACC'L PEDAL TO DASH
AK STUD.WELD/INTERNAL – HEADER.PT.NIBS.NO.FIN – CLUTCH ASSY TO DASH
AL STUD.WELD/UNTHREADED – CHAMFER.PT.UNTHREADED – I/P LOCATOR
AM 06105013AA (QTY 10)
AN 06105012AA (QTY 8 + 2)

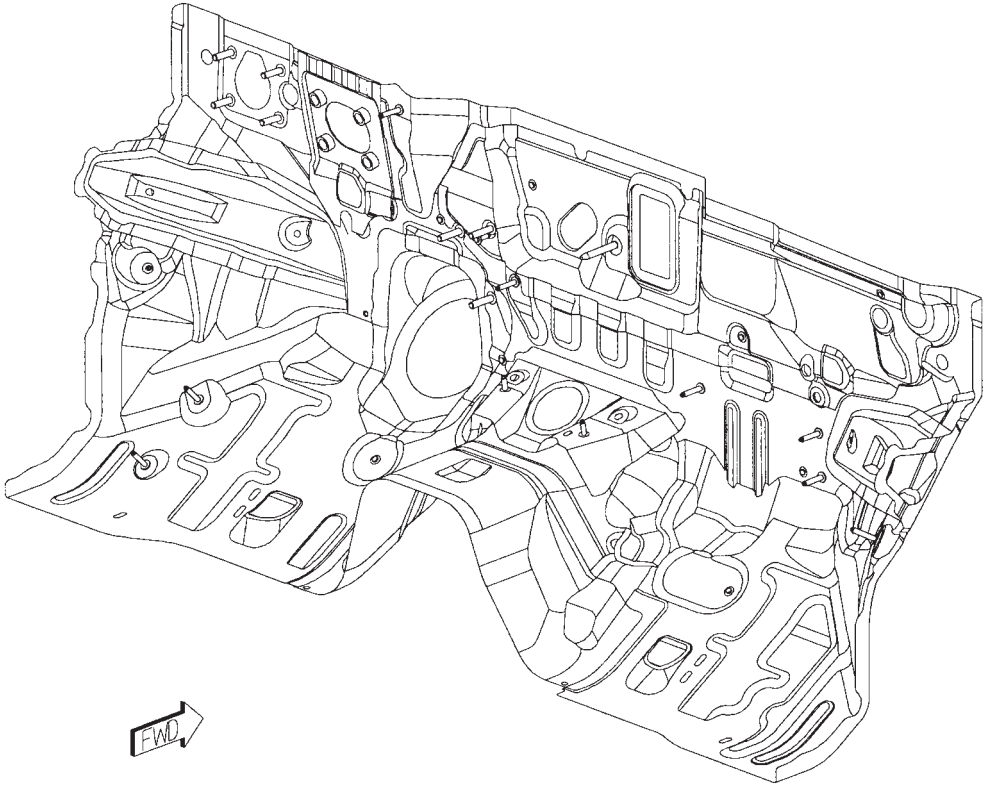

Back to Index

WELD LAYOUT LOCATION GUIDE

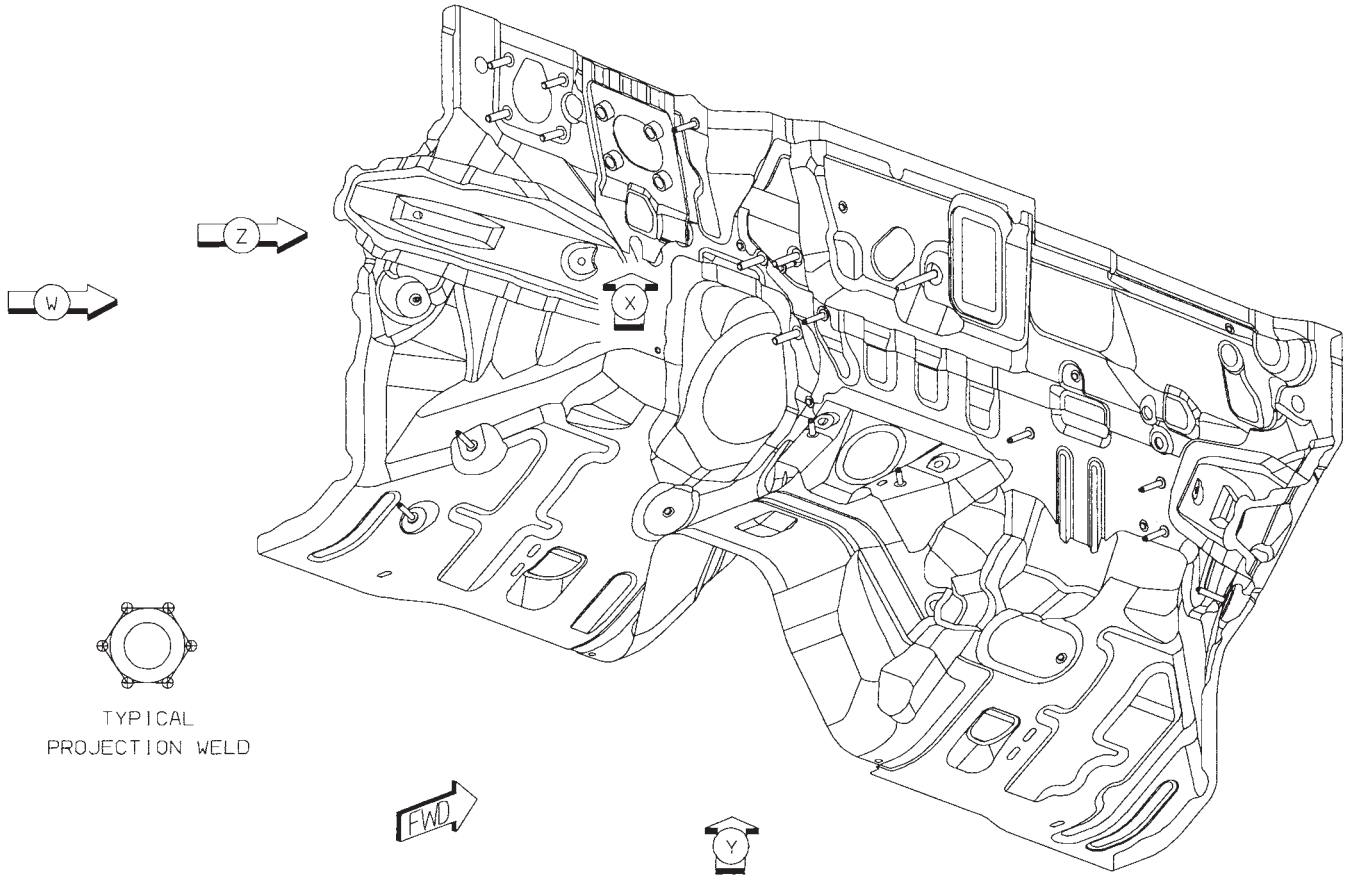

Back to Index

01 AB TO AA 9 S/WELDS (ORD)
02 AC TO AA 9 S/WELDS (CRT)
03 AD TO AA 9/SD S/WELDS (ORD)

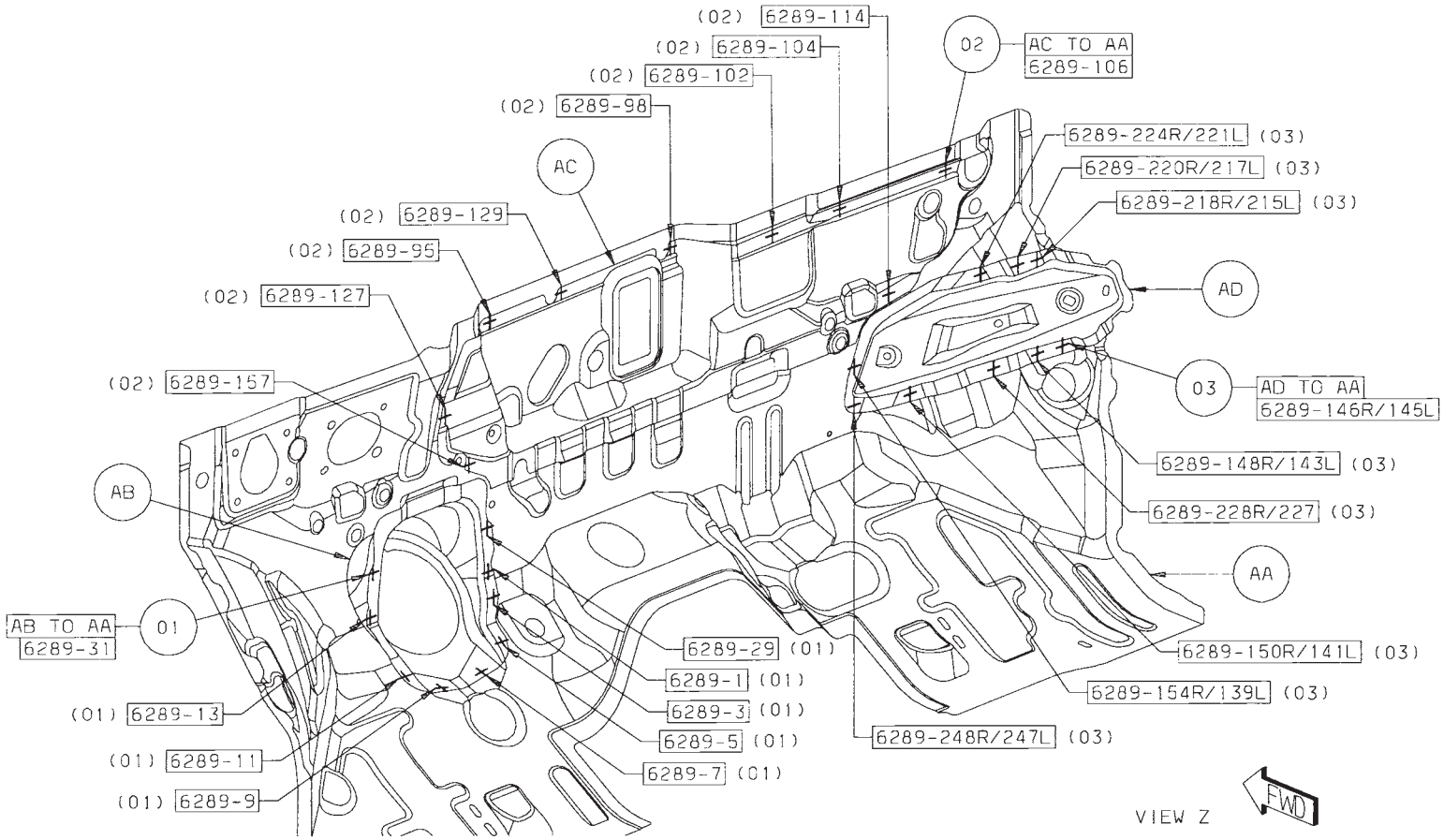

Back to Index

04 AE TO AD TO AA 1L S/WELD (ORD)
05 AE TO AA 11 S/WELDS (ORD)
06 AF TO AA 6 S/WELDS (ORD)
07 AG TO AA 11 S/WELDS (ORD)

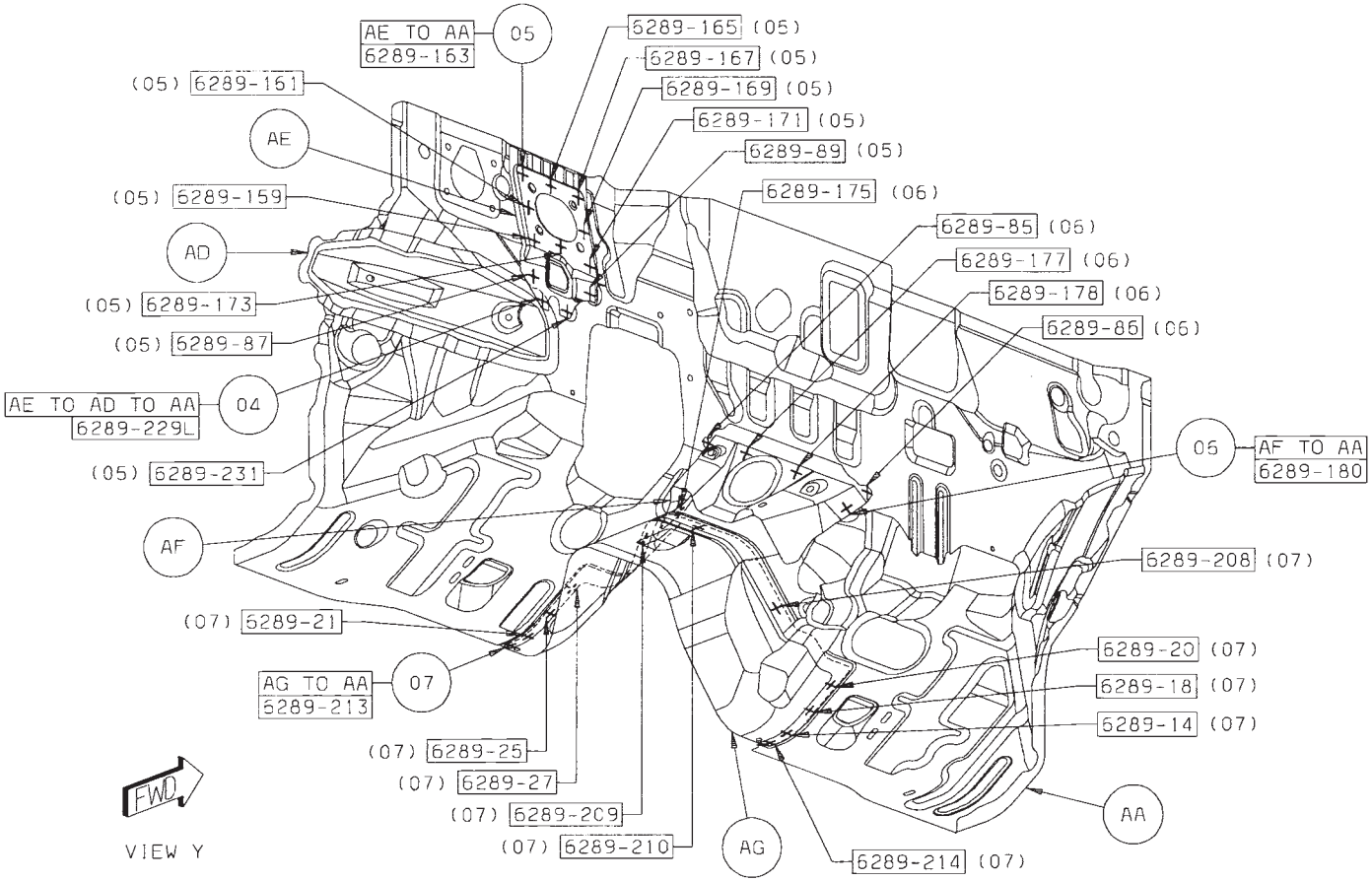

Back to Index

08 AH TO AE 4 PROJ WELDS (ORD)
09 AJ TO AA 3 PROJ WELDS (ORD)
10 AK TO AA 4 PROJ WELDS (ORD)
11 AL TO AA 1 PROJ WELD (ORD)
12 AM TO AA 11 PROJ WELDS (ORD)
13 AN TO AA 8 PROJ WELDS (ORD)
14 AN TO AF 2 PROJ WELDS (ORD)

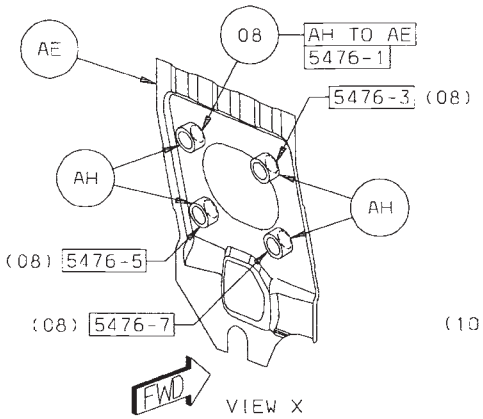

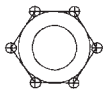

TYPICAL
PROJECTION WELD

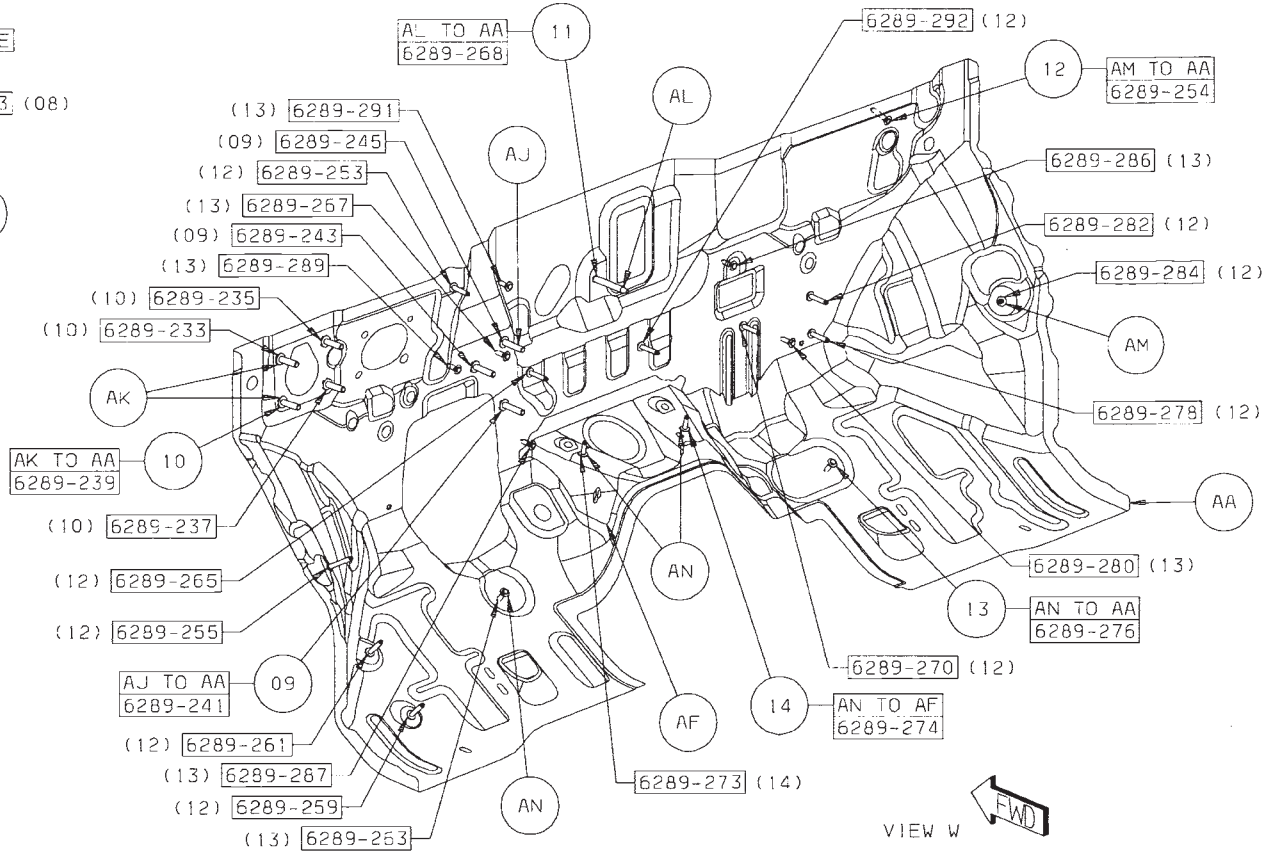

Back to Index

CHRYSLER SEBRING DECKLID SECTION

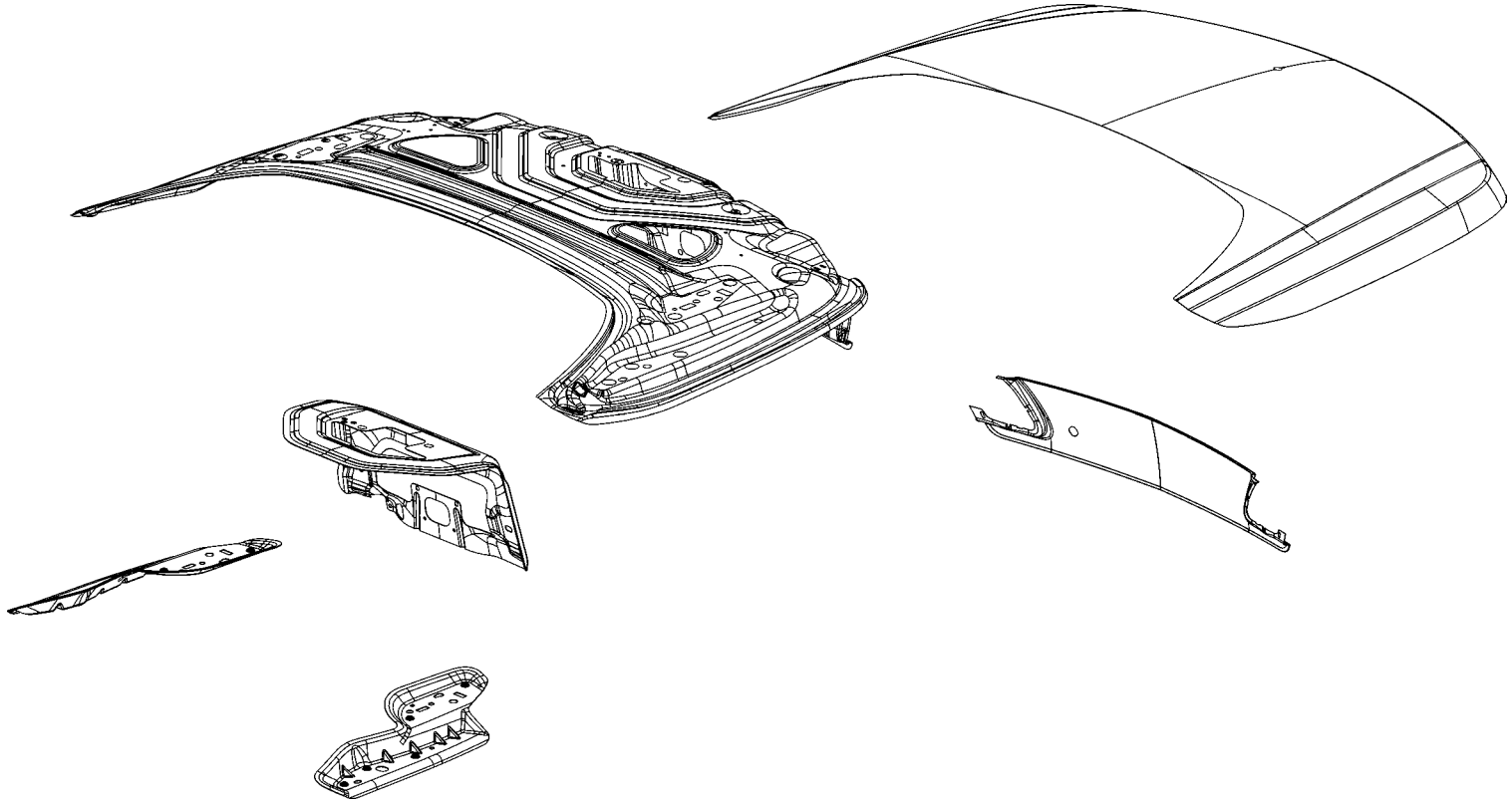

AA PANEL – DECKLID INR –
AB REINF – HINGE MOUNTED RT –
AB REINF – HINGE MOUNTED LT –
AC REINF ASSY – DECKLID INR PANEL LATCH –
AD PANEL ASSY – DECKLID OTR – DECKLID OUTER

Back to Index

PARTS IDENTIFICATION LEGEND, OVERVIEW 45

AA PANEL – DECKLID INR –
AB REINF – HINGE MOUNTED RT –
AB REINF – HINGE MOUNTED LT –
AC REINF ASSY – DECKLID INR PANEL LATCH –
AD PANEL ASSY – DECKLID OTR – DECKLID OUTER

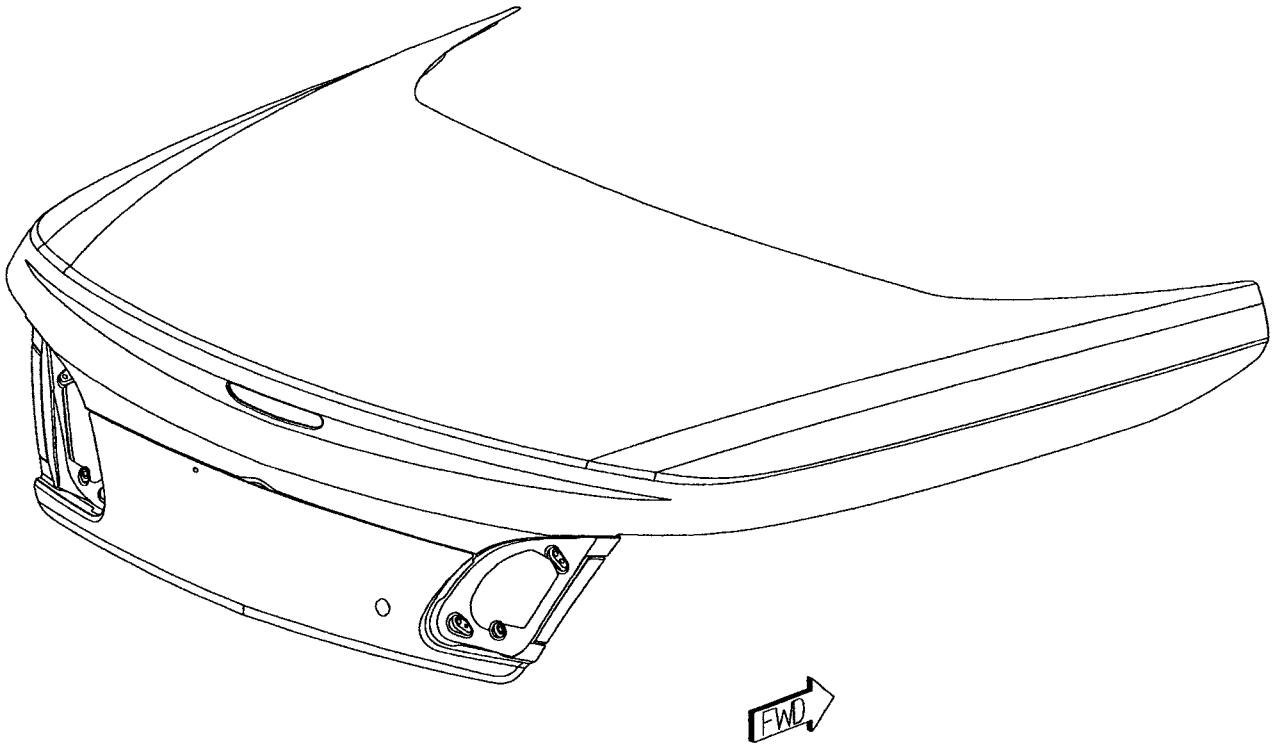

Back to Index

WELD LAYOUT LOCATION GUIDE

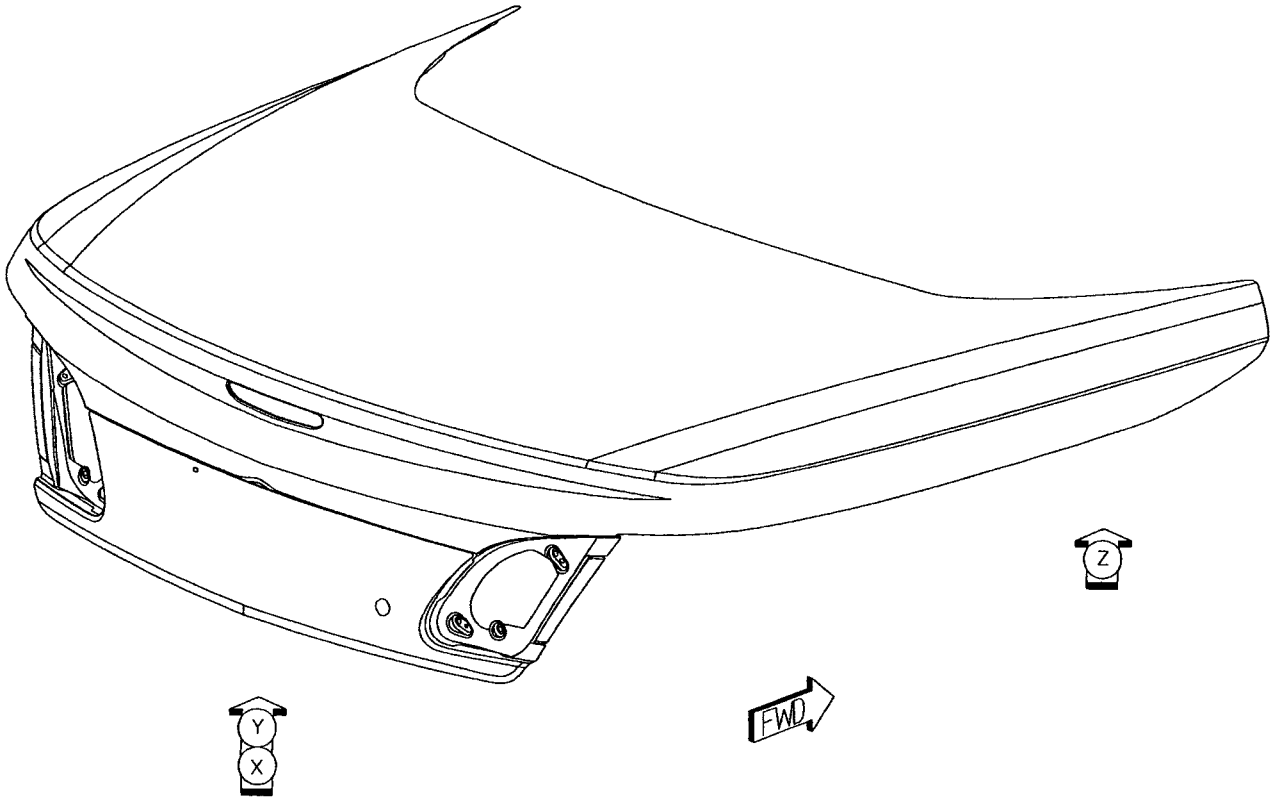

Back to Index

01 AB TO AA 10/SD S/WELD (ORD)

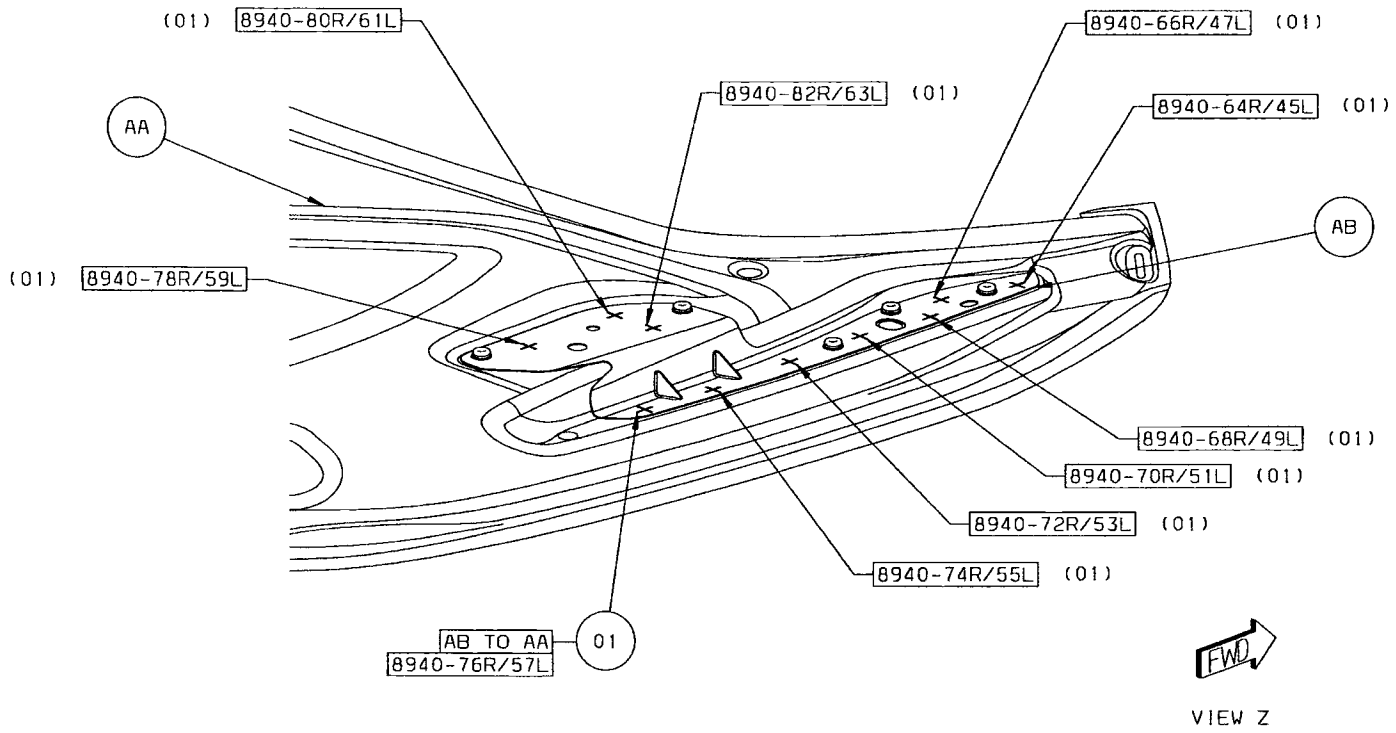

Back to Index

02 AC TO AA 23 S/WELDS (ORD)
03 AD TO AA 6/SD S/WELDS (ORD)

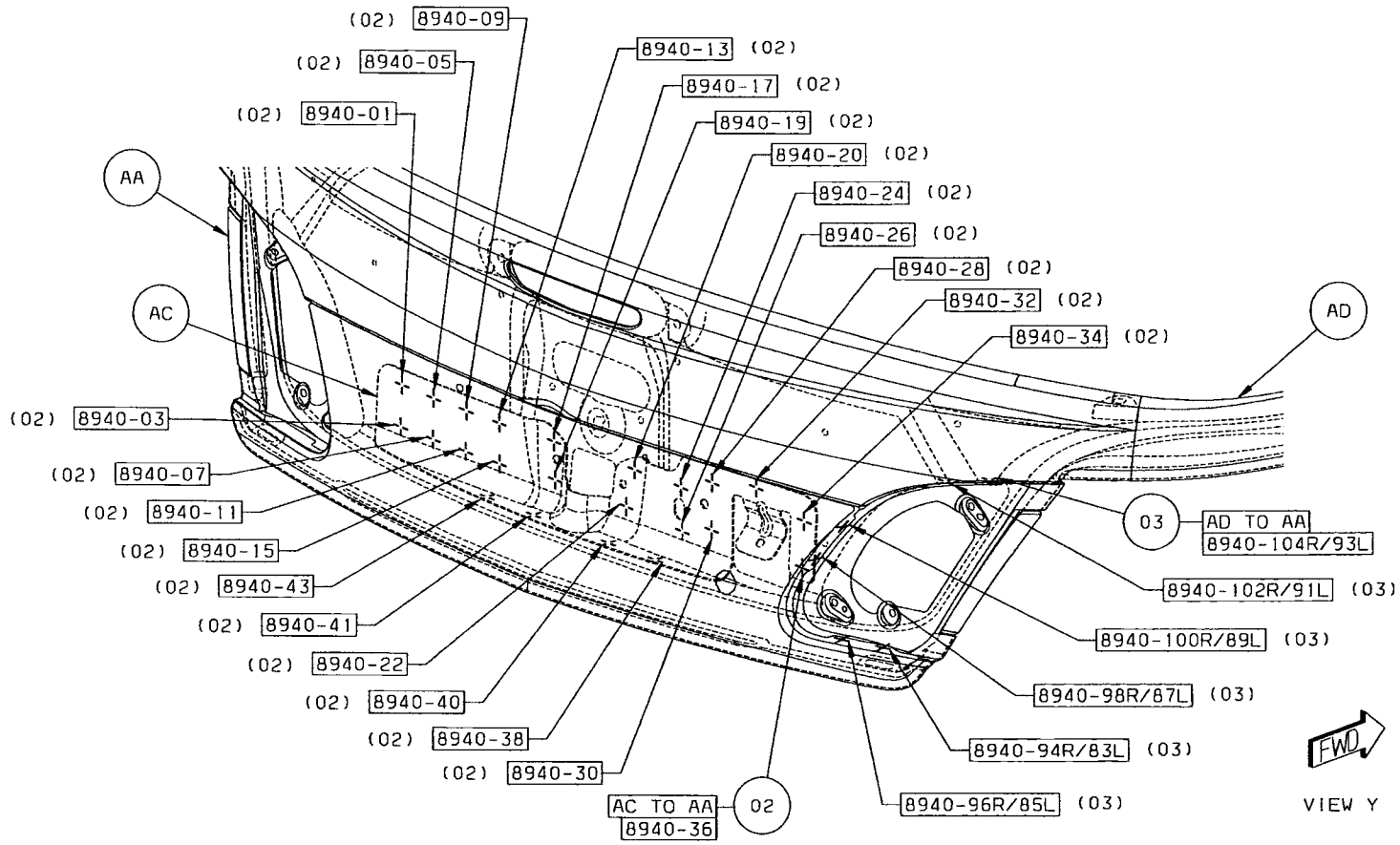

Back to Index

04 AD TO AA 1/SD STRUC ADH
05 AD TO AA 1 STRUC ADH
06 AD TO AA 1 STRUC ADH
07 AD TO AA 1 STRUC ADH
08 AD TO AA 1 STRUC ADH
09 AD TO AA 1 STRUC ADH
10 AD TO AA 1/SD STRUC ADH
11 AD TO AA 1/SD STRUC ADH
12 AD TO AA 1/SD STRUC ADH

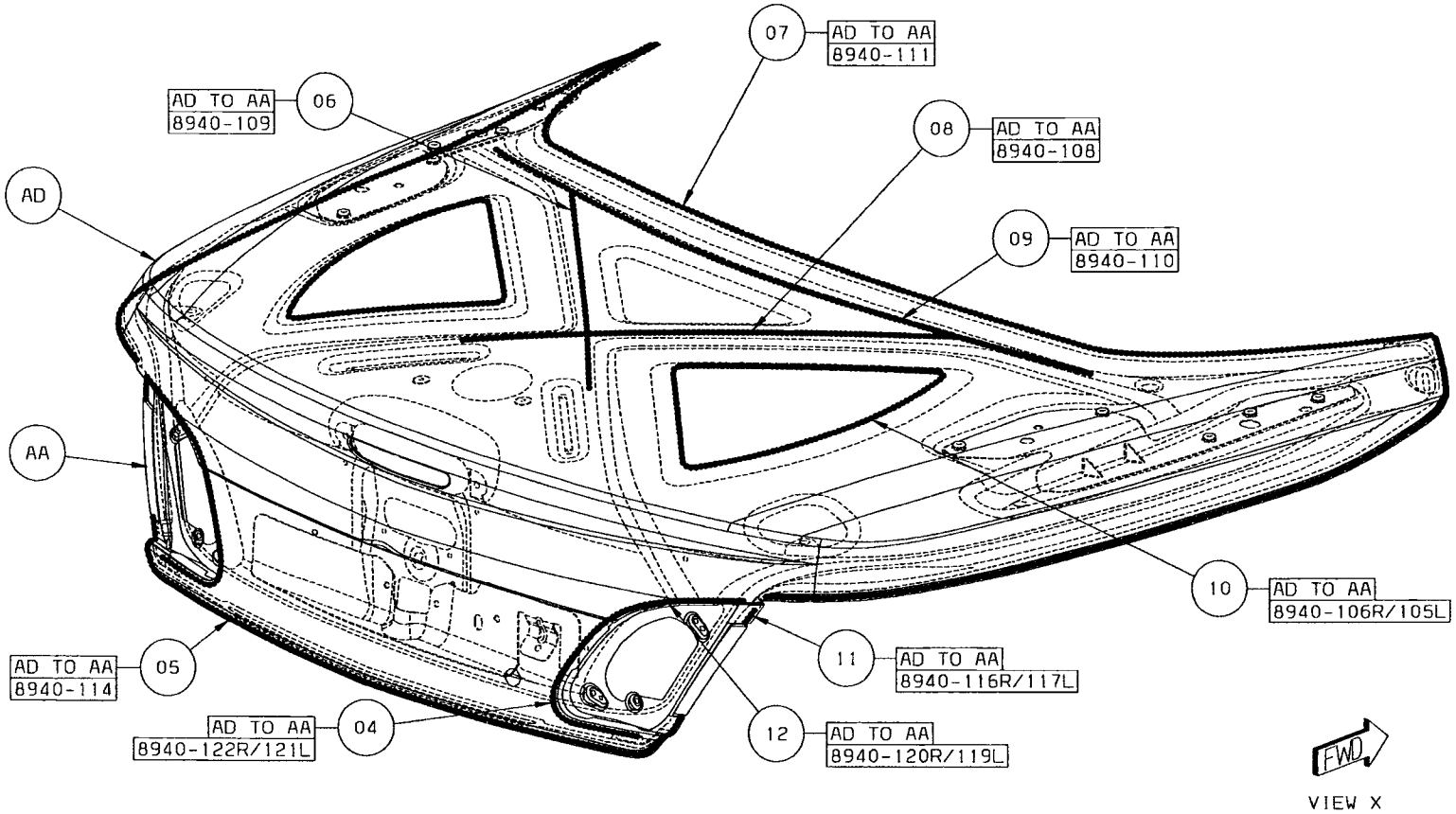

Back to Index

DODGE AVENGER DECKLID SECTION

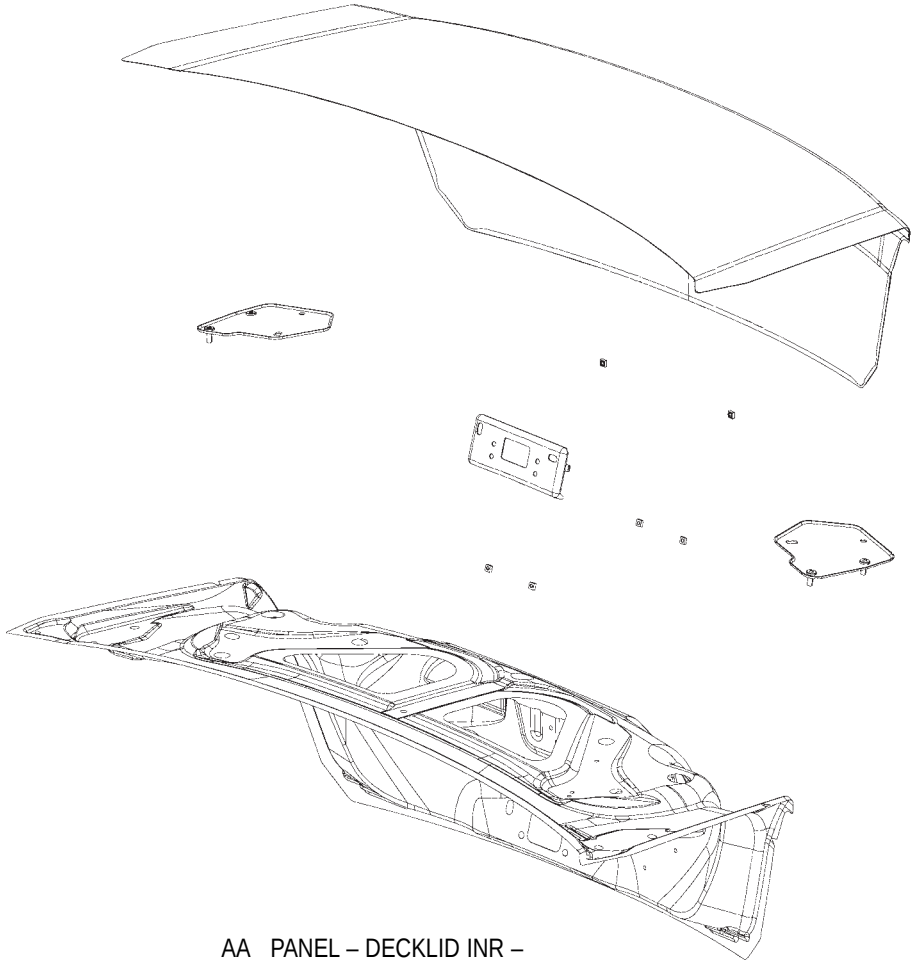

AA PANEL – DECKLID INR –
AB REINF – DECKLID LATCH MOUNTING –
AC REINF ASSY – HINGE MOUNTING UPR RT –
AC REINF ASSY – HINGE MOUNTING UPR LT –
AD NUT/WELD.SQ – NIBS.NO.FIN.SQUARE –
INR PNL ASSY TO KEY CYLINDER
AE PANEL – DECKLID OTR –

Back to Index

PARTS IDENTIFICATION LEGEND, OVERVIEW 47

AA PANEL – DECKLID INR –
AB REINF – DECKLID LATCH MOUNTING –
AC REINF ASSY – HINGE MOUNTING UPR RT –
AC REINF ASSY – HINGE MOUNTING UPR LT –
AD NUT/WELD.SQ – NIBS.NO.FIN.SQUARE –
INR PNL ASSY TO KEY CYLINDER
AE PANEL – DECKLID OTR –

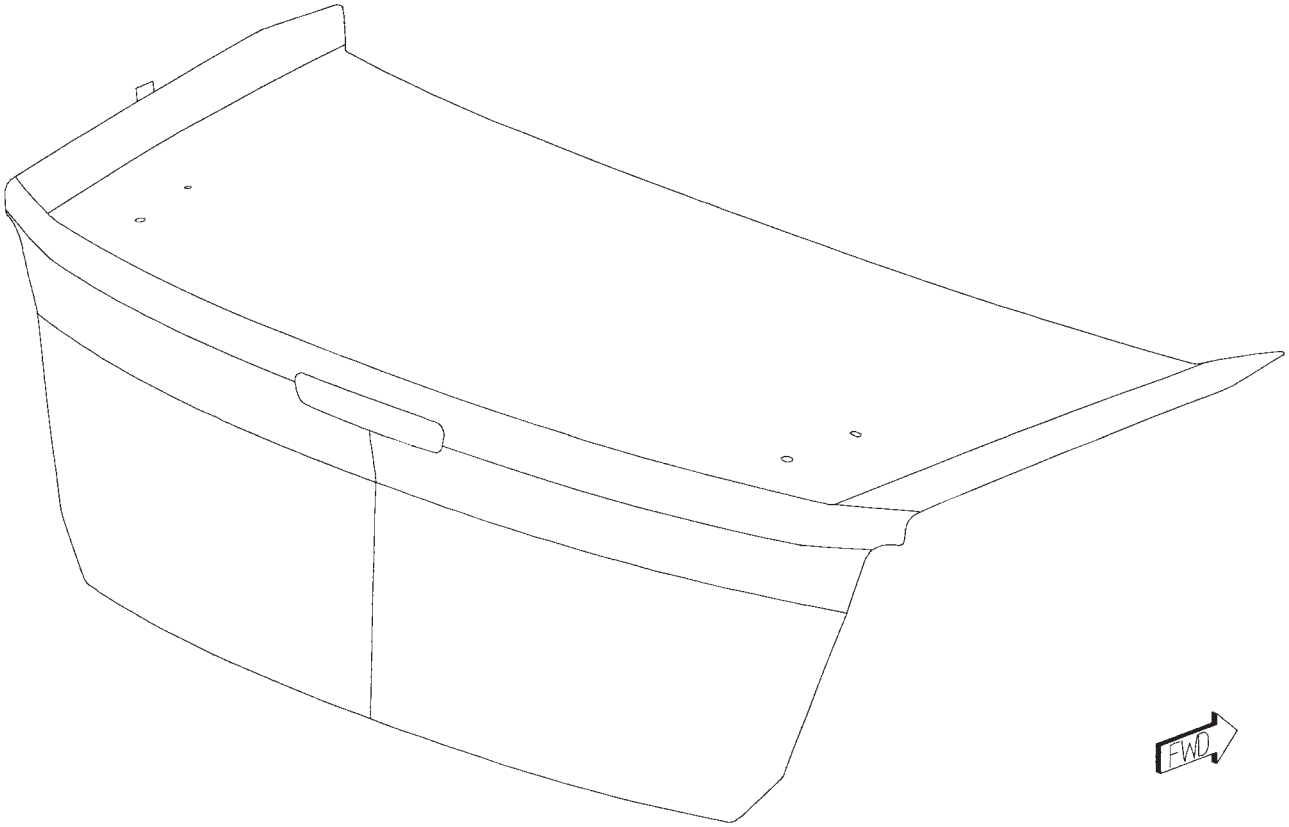

Back to Index

WELD LAYOUT LOCATION GUIDE

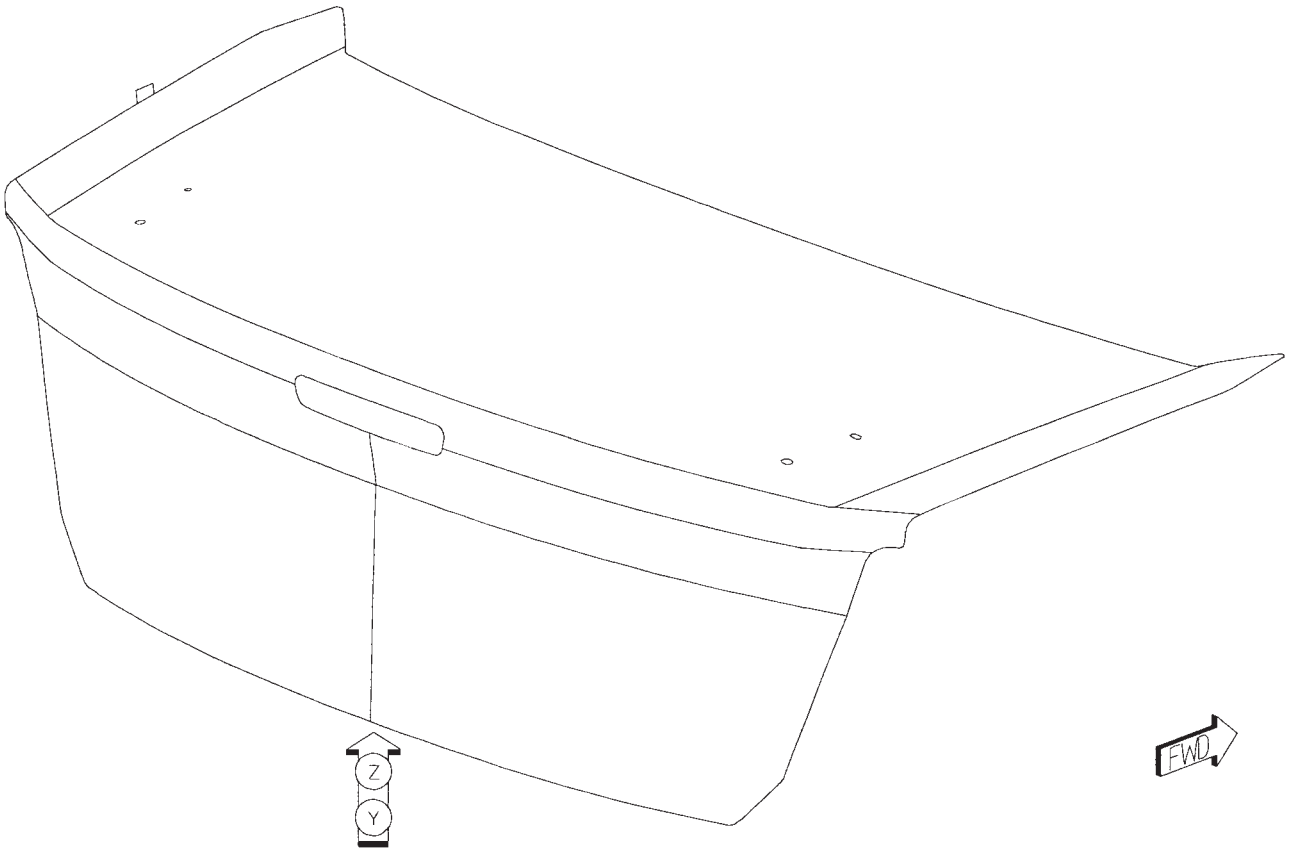

Back to Index

01 AC TO AA 10 S/WELDS (ORD)
02 AB TO AA 7 S/WELDS (ORD)
03 AD TO AA 2 PROJ WELDS (ORD)

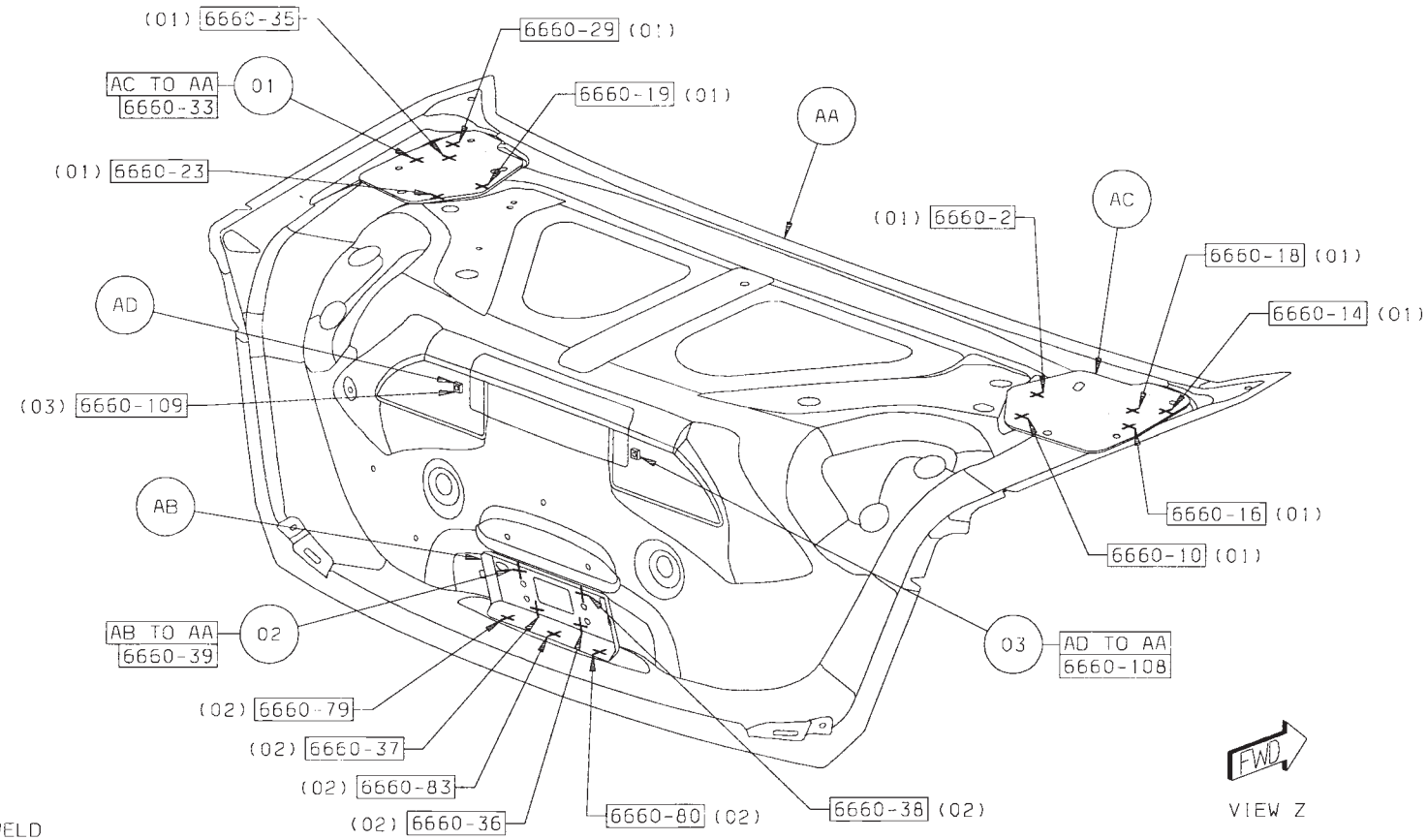

TYPICAL
PROJECTION WELD

Back to Index

04 AE TO AA 1 STRUC ADH
05 AE TO AA 1 STRUC ADH
06 AE TO AA 1 STRUC ADH

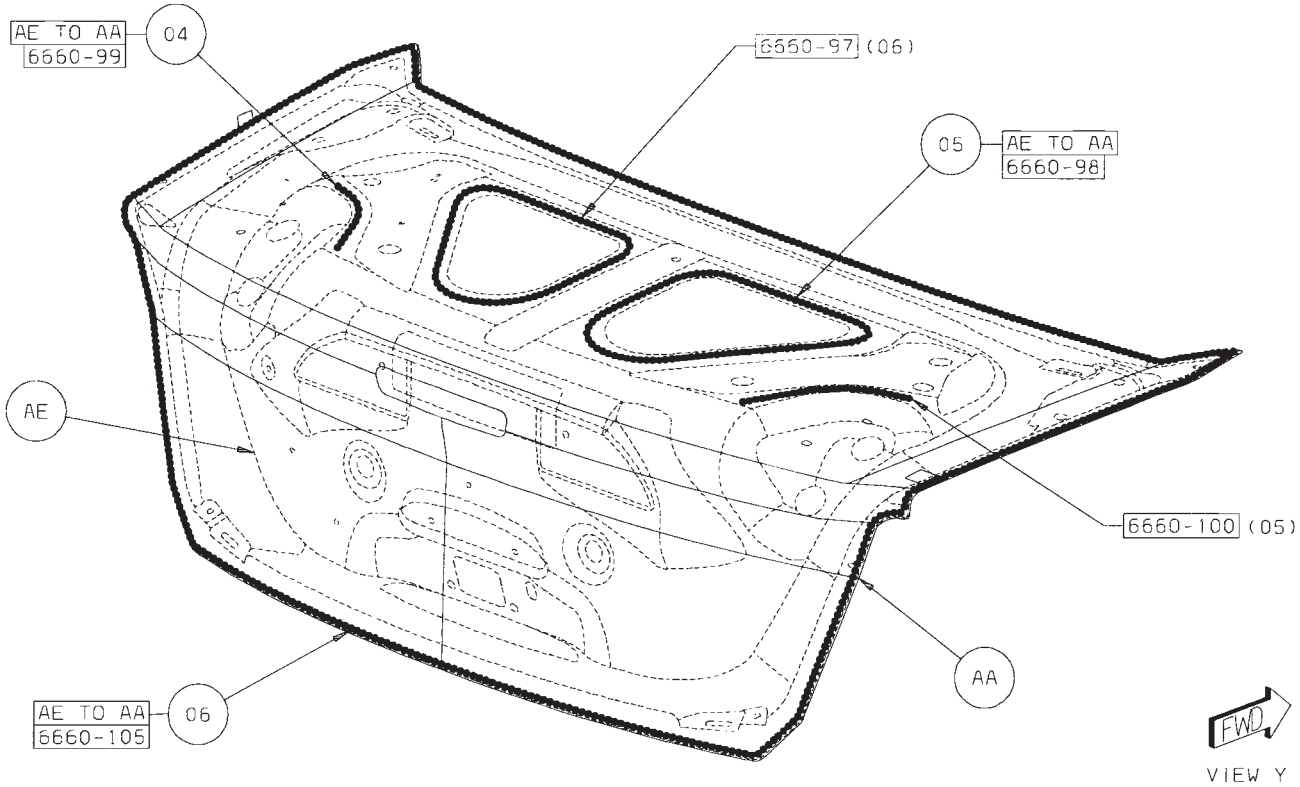

Back to Index

CHRYSLER SEBRING DECKLID SECTION

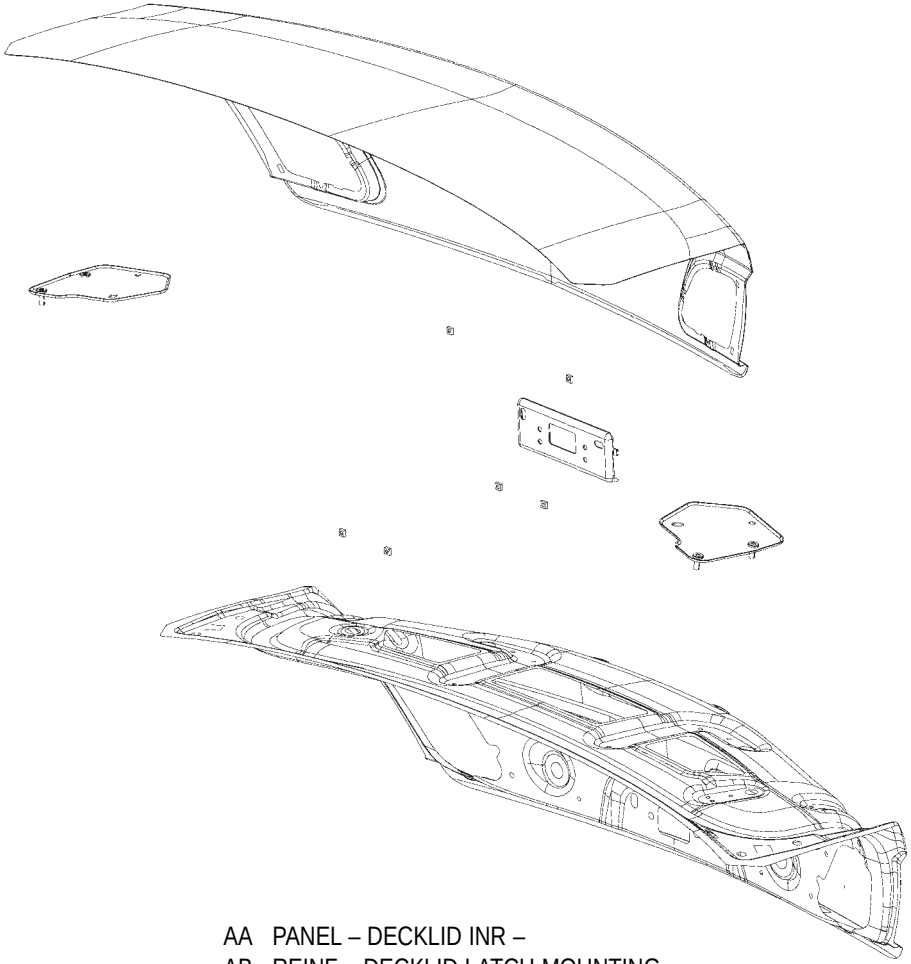

AA PANEL – DECKLID INR –
AB REINF – DECKLID LATCH MOUNTING –
AC REINF ASSY – HINGE MOUNTING UPR RT –
AC REINF ASSY – HINGE MOUNTING UPR LT –
AD NUT/WELD.SQ – NIBS.NO.FIN.SQUARE –
INR PNL ASSY TO KEY CYLINDER
AE PANEL – DECKLID OTR –

Back to Index

PARTS IDENTIFICATION LEGEND, OVERVIEW 46

AA PANEL – DECKLID INR –
AB REINF – DECKLID LATCH MOUNTING –
AC REINF ASSY – HINGE MOUNTING UPR RT –
AC REINF ASSY – HINGE MOUNTING UPR LT –
AD NUT/WELD.SQ – NIBS.NO.FIN.SQUARE –
INR PNL ASSY TO KEY CYLINDER
AE PANEL – DECKLID OTR –

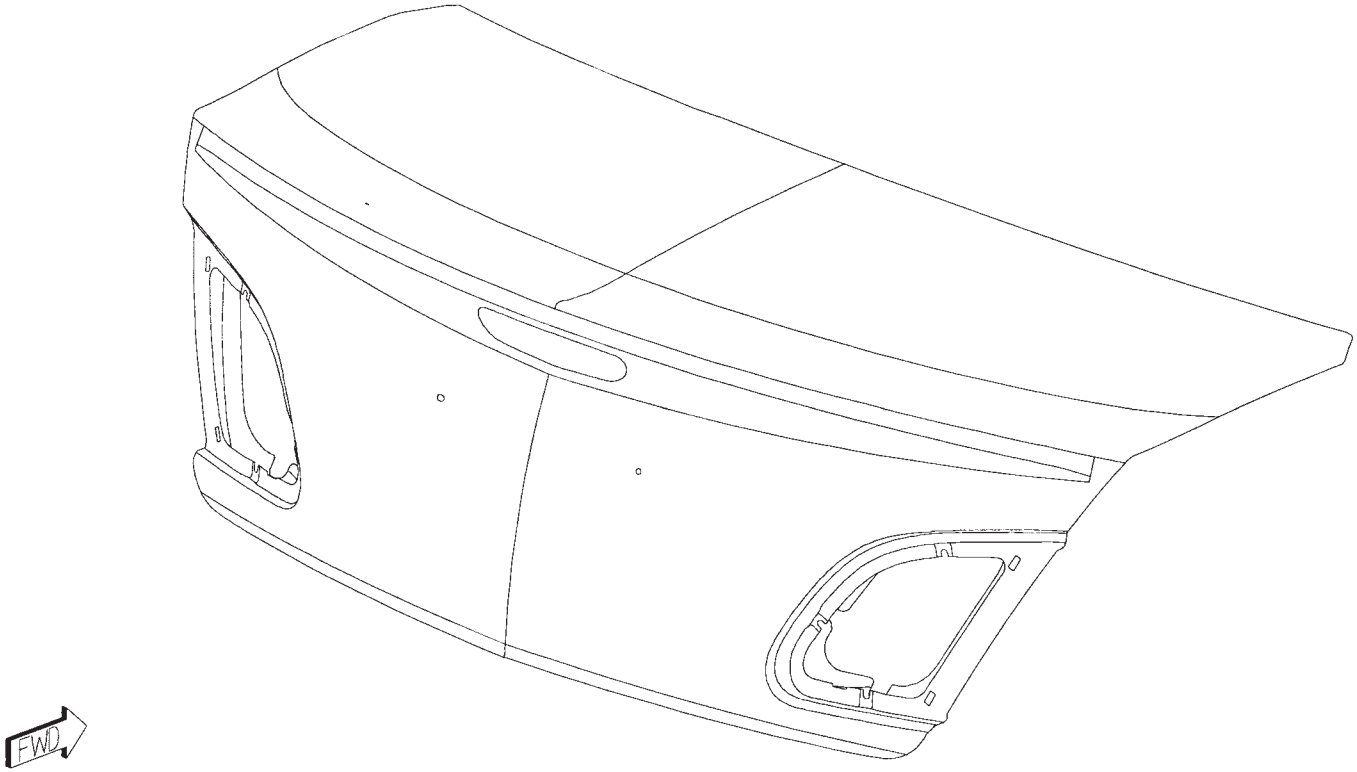

Back to Index

WELD LAYOUT LOCATION GUIDE

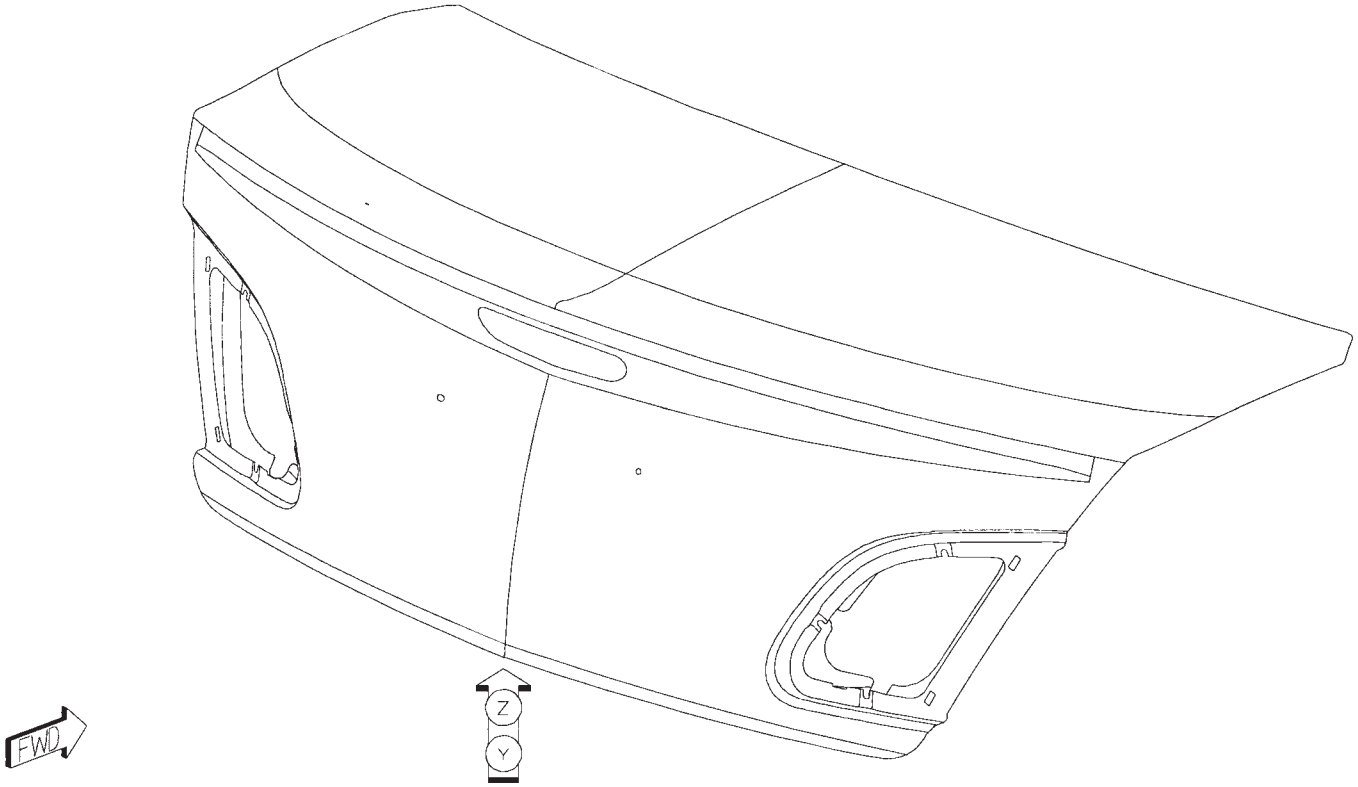

Back to Index

01 AC TO AA 10 S/WELDS (ORD)
02 AB TO AA 7 S/WELDS (ORD)
03 AD TO AA 2 PROJ WELDS (ORD)

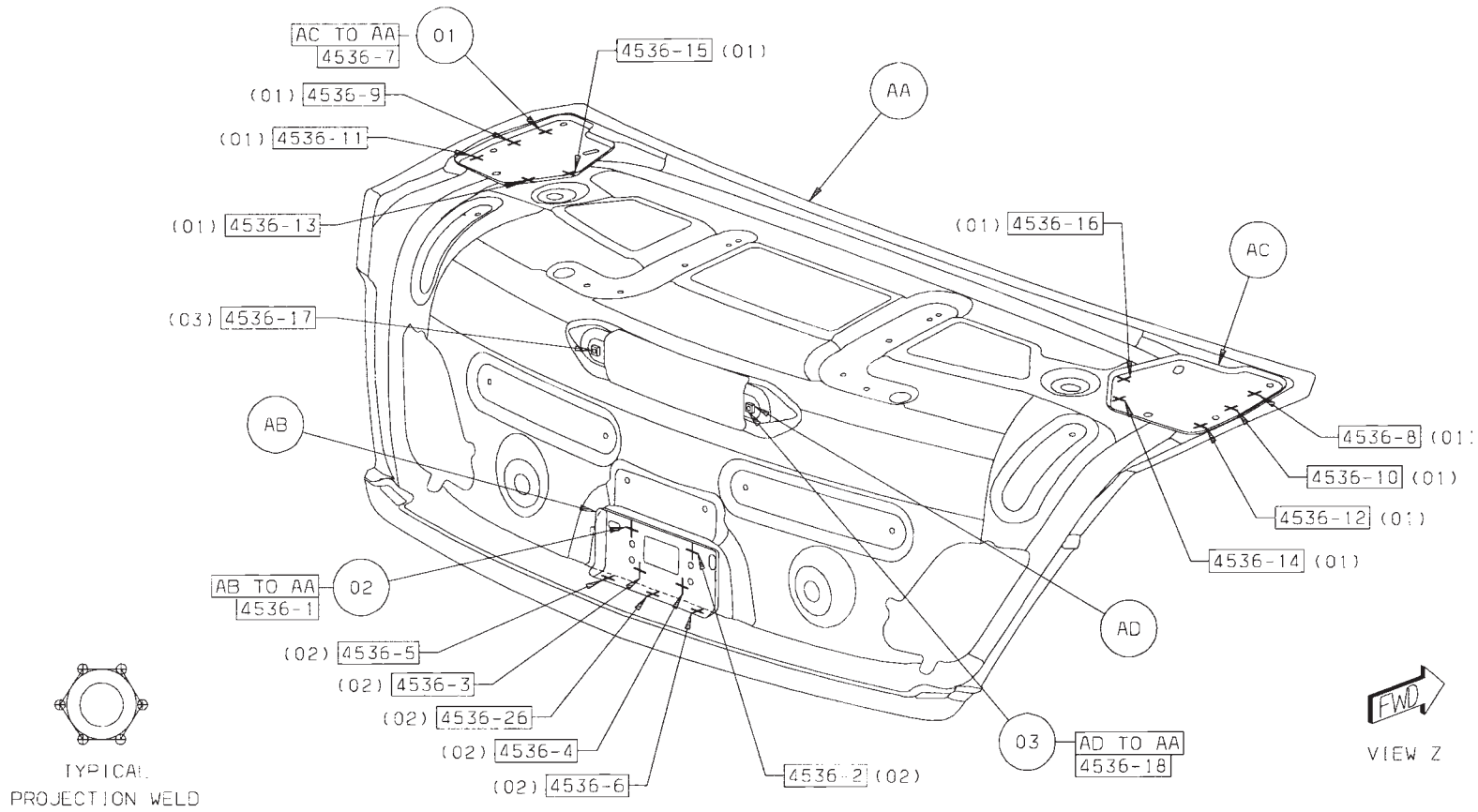

Back to Index

04 AE TO AA 2 STRUC ADH
05 AE TO AA 1 STRUC ADH
06 AE TO AA 1 STRUC ADH

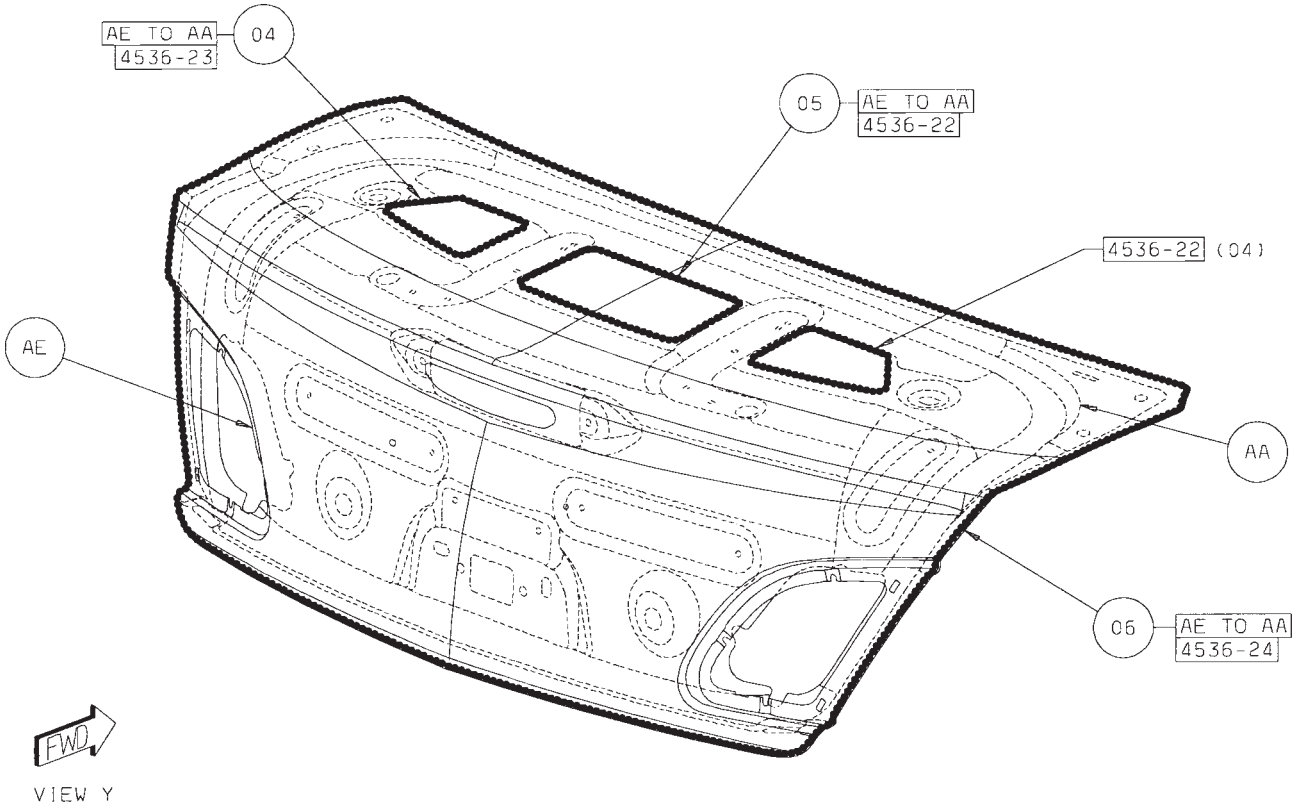

Back to Index

CHRYSLER SEBRING ENGINE BOX SECTION

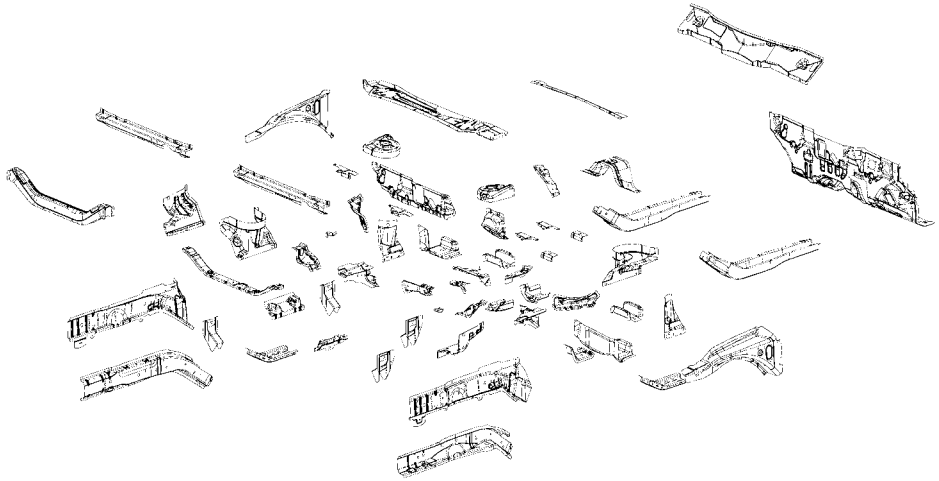

AA CROSSMEMBER – FRT UPR –
AB GUSSET – REINF –
AB GUSSET – REINF –
AC RAIL – FRT OTR RT –
AC RAIL – FRT OTR LT –
AD PANEL – FRT SIDE RAIL INR RT –
AD PANEL – FRT SIDE RAIL INR LT –
AE CROSSMEMBER – FRT LWR –
AF BEAM – LOAD PATH INR UPR RT –
AF BEAM – LOAD PATH INR UPR LT –
AG SHIELD – FENDER RT –
AG SHIELD – FENDER LT –
AH REINF – CAP –
AH REINF – CAP –
AJ PANEL – SHOCK –
AJ PANEL – SHOCK –
AK GUSSET – ENGINE MOUNT –
AL GUSSET – WHEELHOUSE –
AL GUSSET – WHEELHOUSE –
AM REINF – SHOCK TOWER MOUNTING FRT RT –
AM REINF – SHOCK TOWER MOUNTING FRT LT –
AN PANEL – COWL TOP LOWER –
AP GUSSET – SHOCK –
AP GUSSET – SHOCK –
AR REINF – BRACE –
AR REINF – BRACE –
AS BRACKET – FRT ENGINE MOUNT ATTACH –
AT BRACKET – FRT ENGINE MOUNT RT –
AT BRACKET – TRANS MOUNT LT – TRANS MOUNT TO BODY
AU GUSSET – TRANSMISSION –
AV PANEL – COWL TOP INNER –
AW PANEL – DASH –
AX BRACE – FRT SHOCK TOWER –
AY CROSSMEMBER – DASH –
AZ CARRIER – PATCH –
BA CROSSMEMBER – DASH –
BB BRACE – FRT SIDE FRT RT –
BB BRACE – FRT SIDE FRT LT –
BC PANEL – EXTENSION FRT RAIL INR RT –
BD BRACE – TORQUE BOX RT –
BD BRACE – TORQUE BOX LT –
BE REINF – EXTENSION FRT RAIL INR RT–
BE REINF – EXTENSION FRT RAIL INR LT–
BH REINF – EXTENSION FRT RAIL INR RT–
BH REINF – EXTENSION FRT RAIL INR LT–
BJ EXTENSION – DASH LWR –
BJ EXTENSION – DASH LWR –
BK EXTENSION – RAIL FRT RT –
BK EXTENSION – RAIL FRT LT –
BL CROSSMEMBER – DASH –
BM PANEL – DASH LWR –
BN BRACKET – STEERING SHAFT –
BP CROSSMEMBER – DASH –
BR REINF – TUNNEL –
BS STUD.WELD/EXTERNAL – PNT.CUTTER.PILOT.PT.SPECIAL – HEAT SHIELD TO UPR DASH X-MBR
BT BULKHEAD – FRT SUSP MOUNTING RR RT –
BT BULKHEAD – FRT SUSP MOUNTING RR LT –
BU END CAP – REINF –
BU END CAP – REINF –

Back to Index

PARTS IDENTIFICATION LEGEND, OVERVIEW 19

AA CROSSMEMBER – FRT UPR –
AB GUSSET – REINF –
AB GUSSET – REINF –
AC RAIL – FRT OTR RT –
AC RAIL – FRT OTR LT –
AD PANEL – FRT SIDE RAIL INR RT –
AD PANEL – FRT SIDE RAIL INR LT –
AE CROSSMEMBER – FRT LWR –
AF BEAM – LOAD PATH INR UPR RT –
AF BEAM – LOAD PATH INR UPR LT –
AG SHIELD – FENDER RT –
AG SHIELD – FENDER LT –
AH REINF – CAP –
AH REINF – CAP –
AJ PANEL – SHOCK –
AJ PANEL – SHOCK –
AK GUSSET – ENGINE MOUNT –
AL GUSSET – WHEELHOUSE –
AL GUSSET – WHEELHOUSE –
AM REINF – SHOCK TOWER MOUNTING FRT RT –
AM REINF – SHOCK TOWER MOUNTING FRT LT –
AN PANEL – COWL TOP LOWER –
AP GUSSET – SHOCK –
AP GUSSET – SHOCK –
AR REINF – BRACE –
AR REINF – BRACE –
AS BRACKET – FRT ENGINE MOUNT ATTACH –
AT BRACKET – FRT ENGINE MOUNT RT –
AT BRACKET – TRANS MOUNT LT – TRANS MOUNT TO BODY
AU GUSSET – TRANSMISSION –
AV PANEL – COWL TOP INNER –
AW PANEL – DASH –
AX BRACE – FRT SHOCK TOWER –
AY CROSSMEMBER – DASH –
AZ CARRIER – PATCH –
BA CROSSMEMBER – DASH –
BB BRACE – FRT SIDE FRT RT –
BB BRACE – FRT SIDE FRT LT –
BC PANEL – EXTENSION FRT RAIL INR RT –
BD BRACE – TORQUE BOX RT –
BD BRACE – TORQUE BOX LT –
BE REINF – EXTENSION FRT RAIL INR RT–
BE REINF – EXTENSION FRT RAIL INR LT–
BH REINF – EXTENSION FRT RAIL INR RT–
BH REINF – EXTENSION FRT RAIL INR LT–
BJ EXTENSION – DASH LWR –
BJ EXTENSION – DASH LWR –
BK EXTENSION – RAIL FRT RT –
BK EXTENSION – RAIL FRT LT –
BL CROSSMEMBER – DASH –
BM PANEL – DASH LWR –
BN BRACKET – STEERING SHAFT –
BP CROSSMEMBER – DASH –
BR REINF – TUNNEL –
BS STUD.WELD/EXTERNAL – PNT.CUTTER.PILOT.PT.SPECIAL – HEAT SHIELD TO UPR DASH X-MBR
BT BULKHEAD – FRT SUSP MOUNTING RR RT –
BT BULKHEAD – FRT SUSP MOUNTING RR LT –
BU END CAP – REINF –
BU END CAP – REINF –

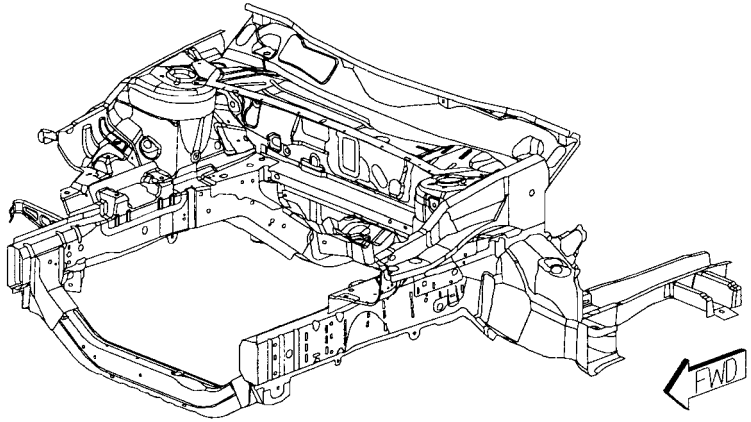

Back to Index

WELD LAYOUT LOCATION GUIDE

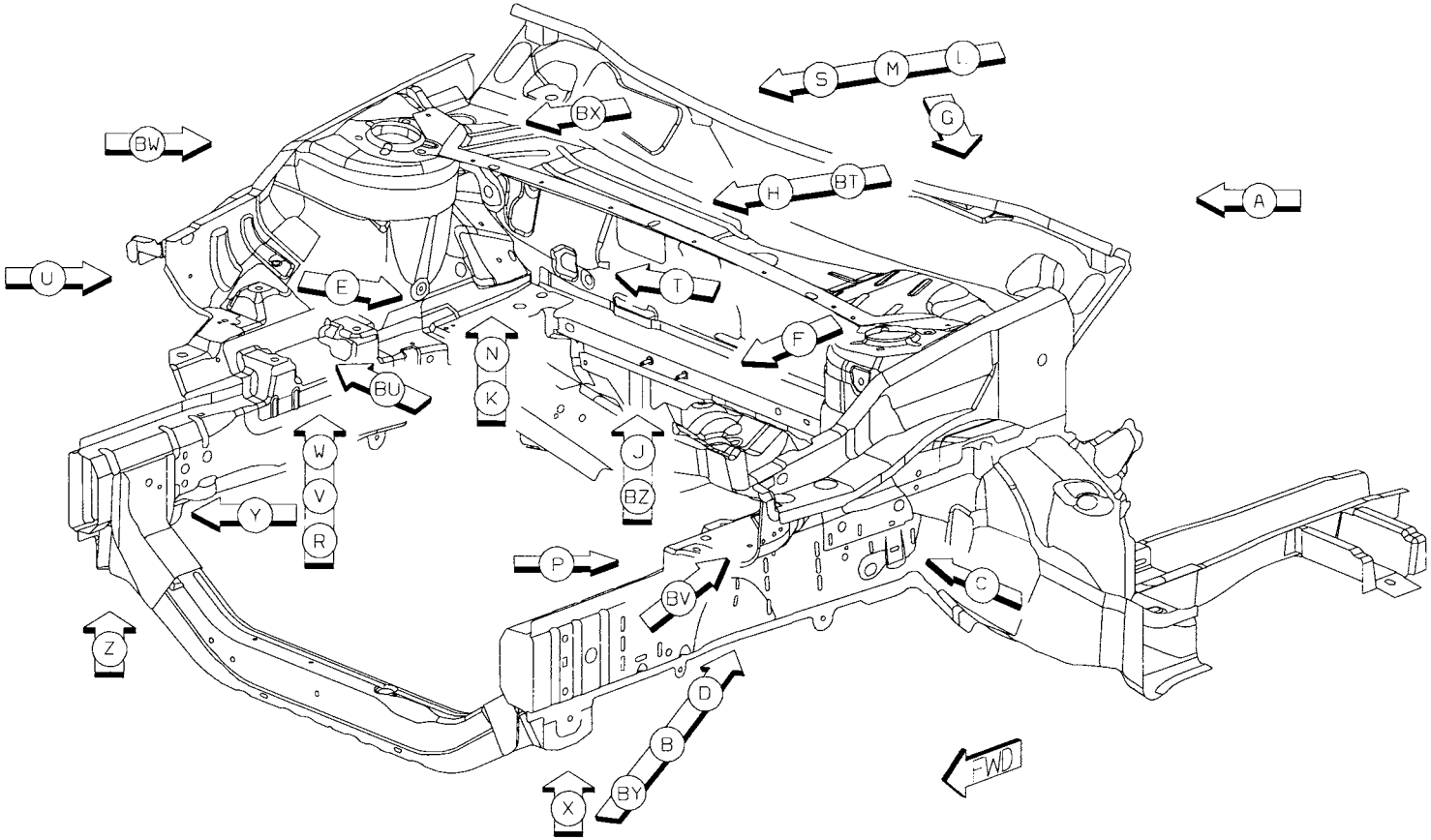

Back to Index

01 AA TO AC 4/SD S/WELDS (ORD)
02 AA TO AD TO AC 2/SD S/WELDS (ORD)
03 AB TO AD 6/SD S/WELDS (ORD)

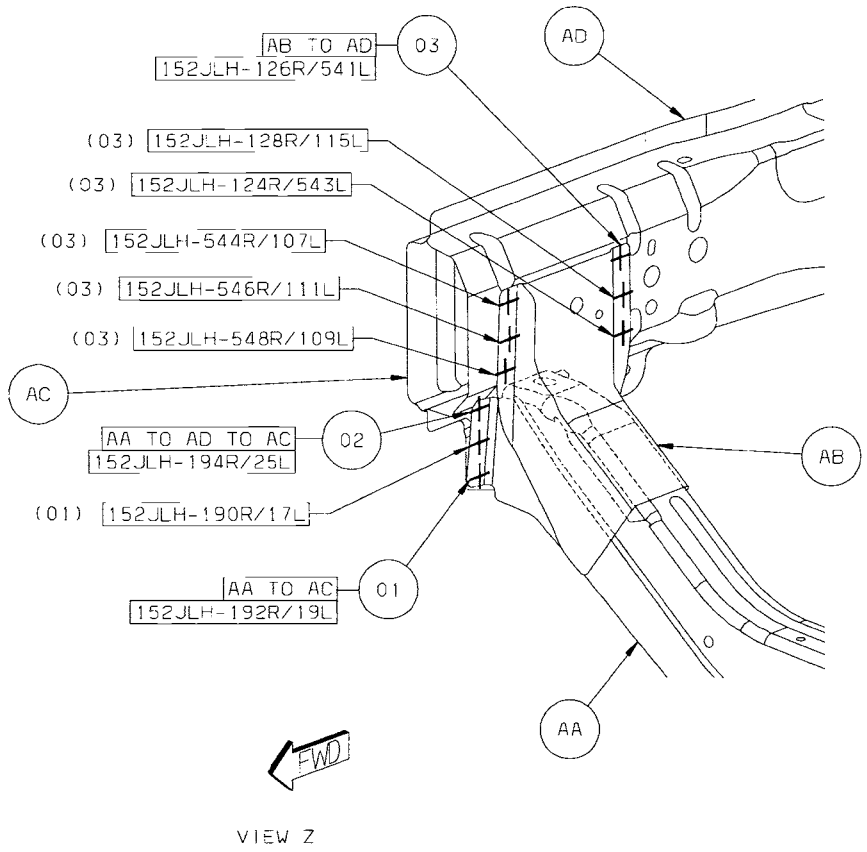

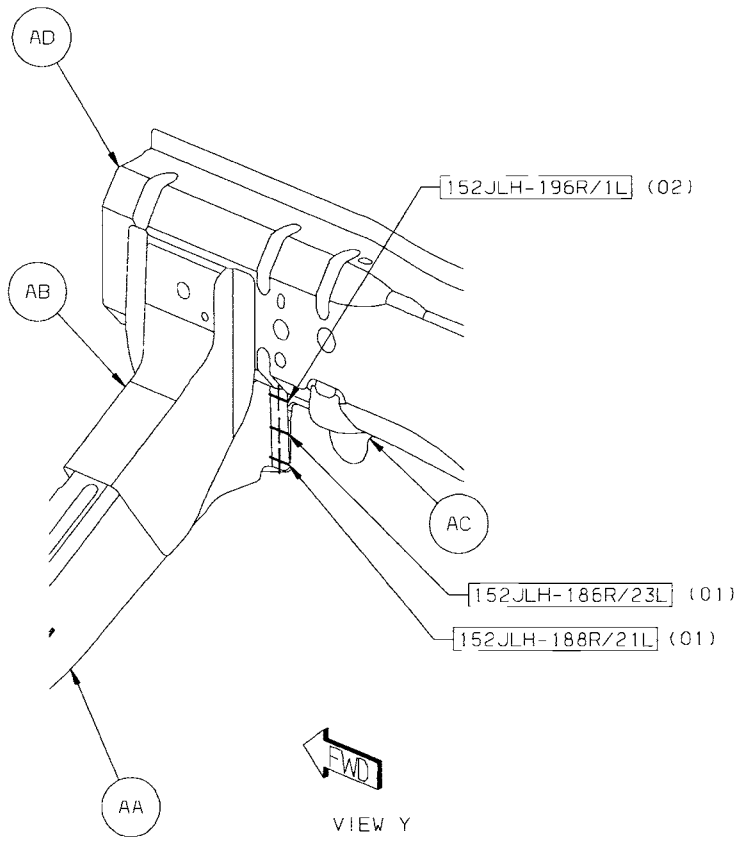

Back to Index

04 AE TO AC 2/SD S/WELDS (ORD)
05 AG TO AF TO BU 1/SD S/WELD (ORD)
06 AC TO AD TO AG 4R/2L S/WELDS (ORD)

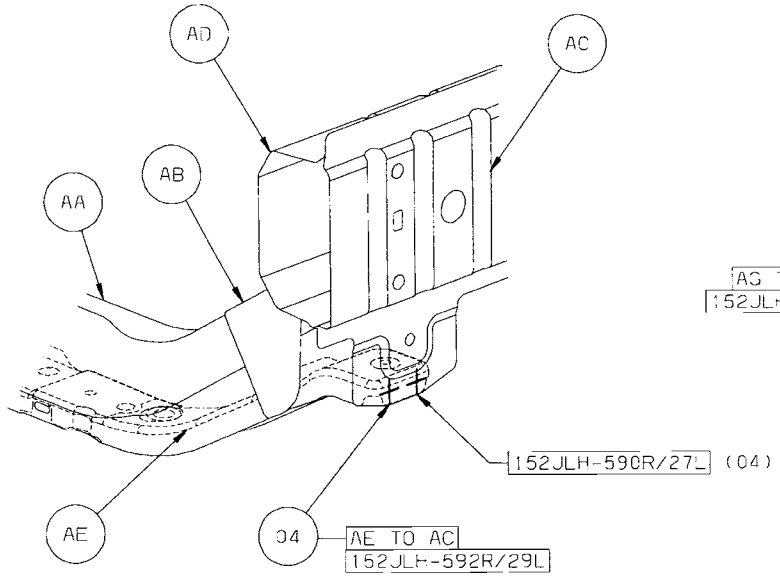

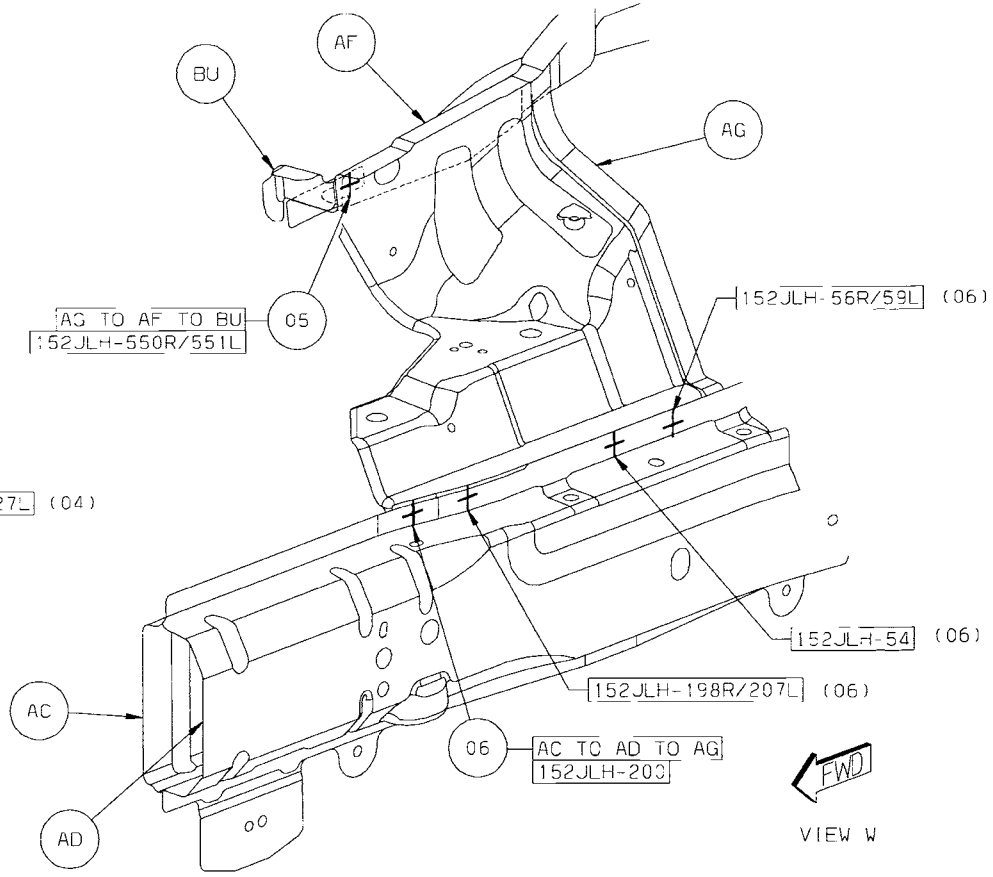

Back to Index

07 AG TO AF 5/SD S/WELDS (ORD)
08 AH TO AF 7/SD S/WELDS (ORD)
09 AJ TO AG TO AF 1/SD S/WELD (ORD)
10 AK TO AF 5/SD S/WELDS (ORD)

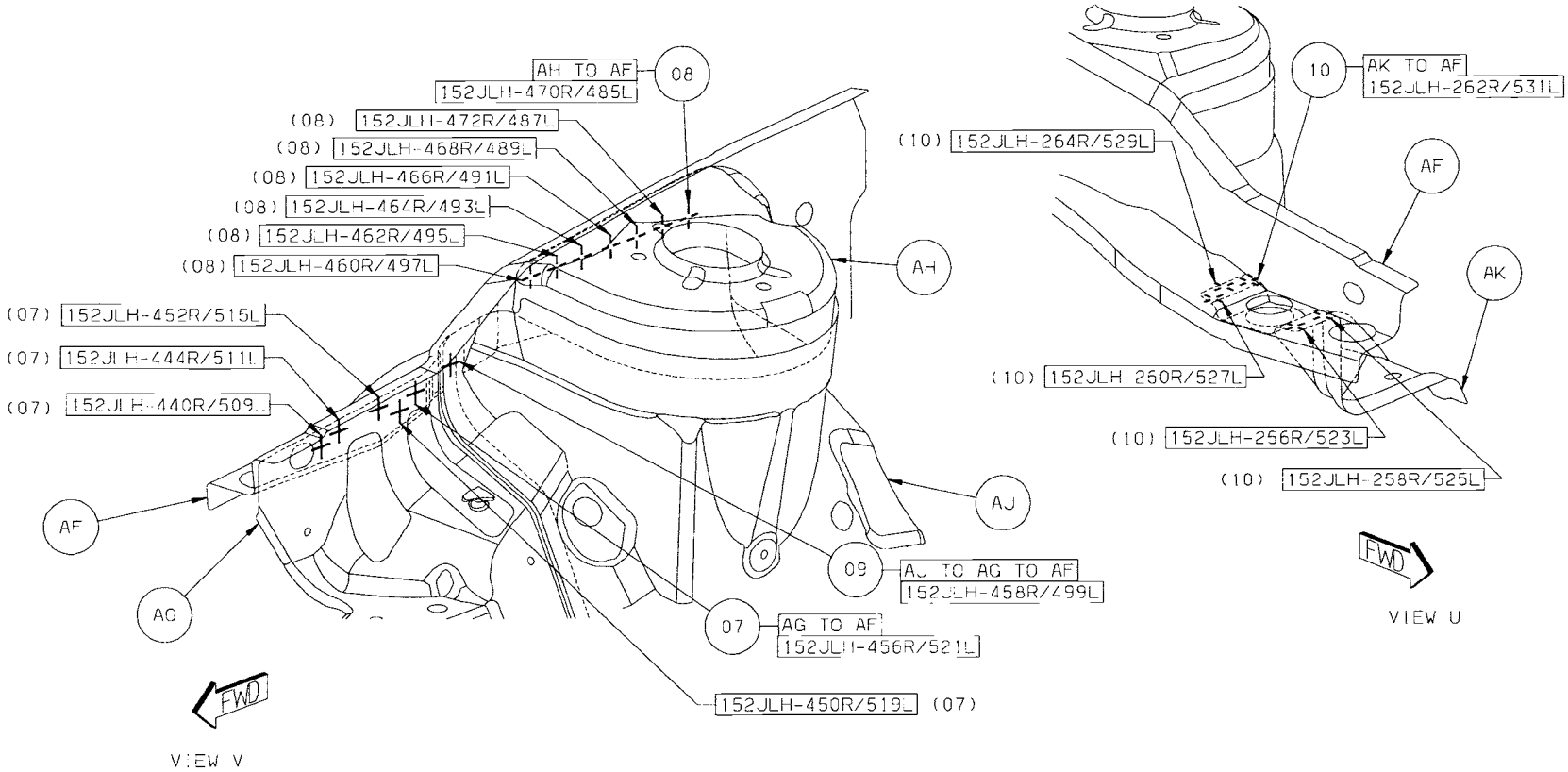

Back to Index

11 AJ TO AF 2/SD S/WELDS (ORD)
12 AM TO AJ TO AF 1/SD S/WELDS (ORD)
13 AC TO AJ TO AL 1/SD S/WELD (ORD)
14 AN TO AP TO AH 2/SD S/WELDS (ORD)
15 AN TO AR 4/SD S/WELDS (ORD)

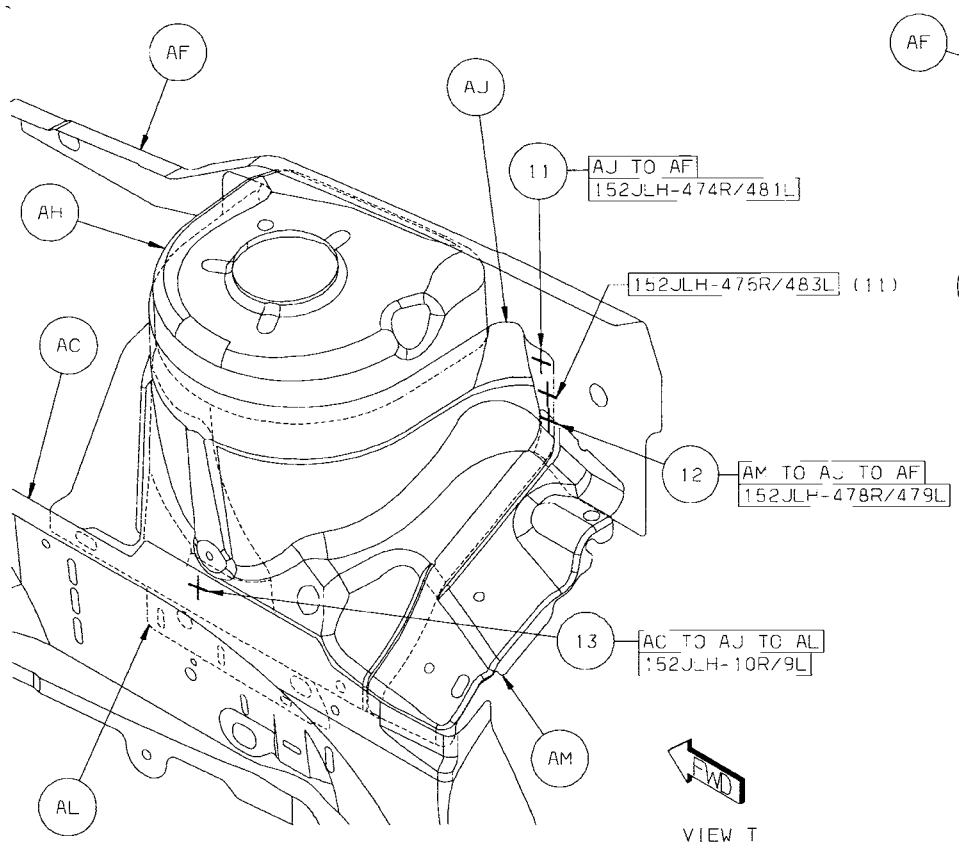

VIEW T

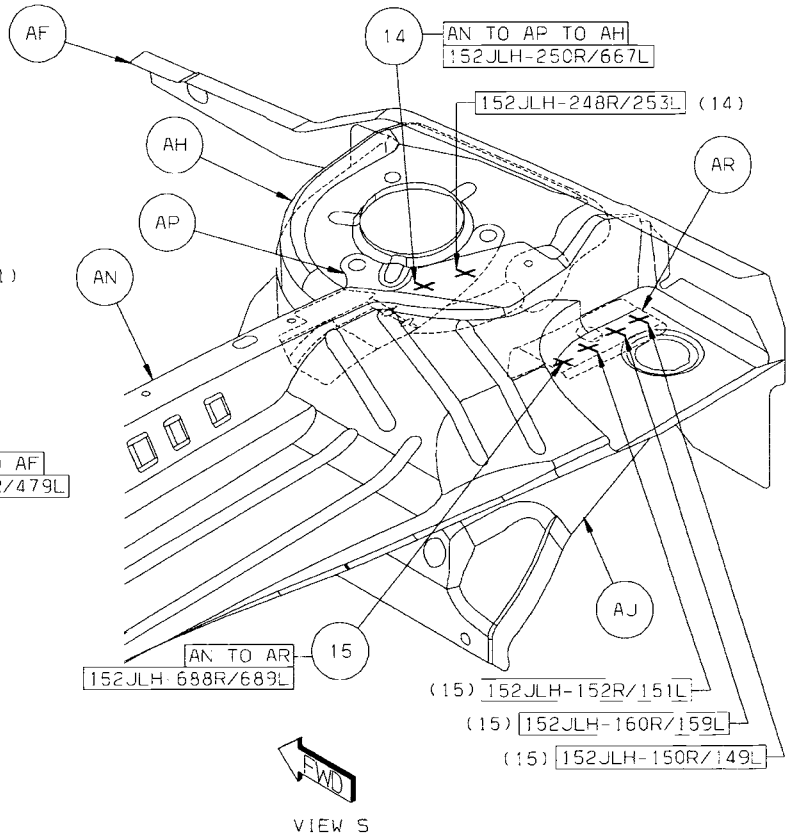

VIEW S

Back to Index

16 AT TO AS TO AG 2R S/WELDS (CRT)
17 AT TO AG 4R S/WELDS (CRT)
18 AT TO AJ 1R S/WELD (CRT)
19 AT TO AG 1L S/WELD (CRT)
20 AU TO AT TO AG 2L S/WELDS (CRT)
21 AC TO AD TO AG 1L S/WELD (CRT)
22 AT TO AG 1L S/WELD (CRT)
23 AT TO AJ 1L S/WELD (CRT)
24 AT TO AJ TO AG 1L S/WELD (CRT)
25 AD TO AC TO AG 1L S/WELD (CRT)

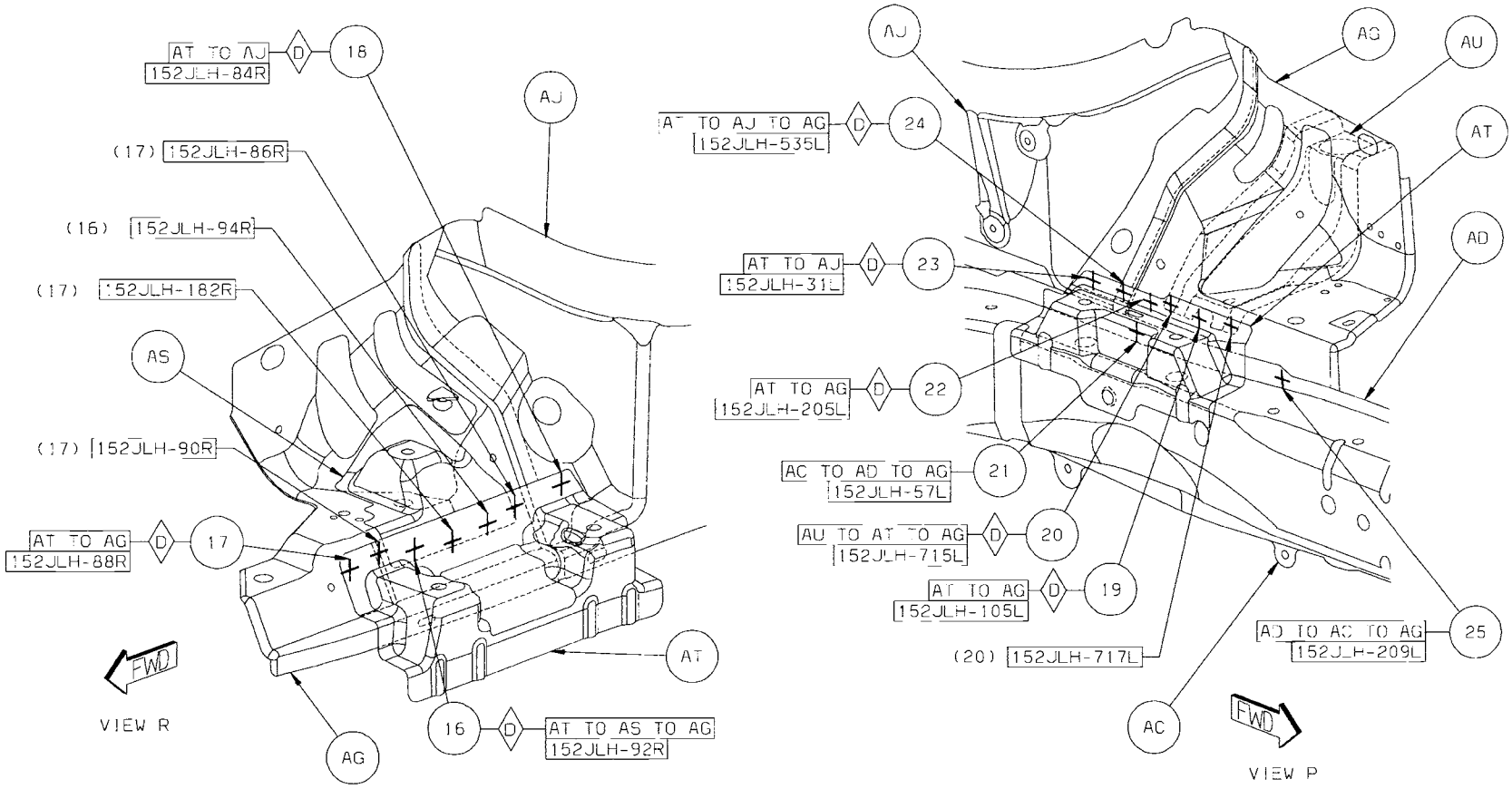

Back to Index

26 AM TO AW 5/SD S/WELDS (ORD)
27 AF TO AV TO AW 1/SD S/WELD (ORD)
28 AN TO AX TO AP 4/SD S/WELDS (ORD)

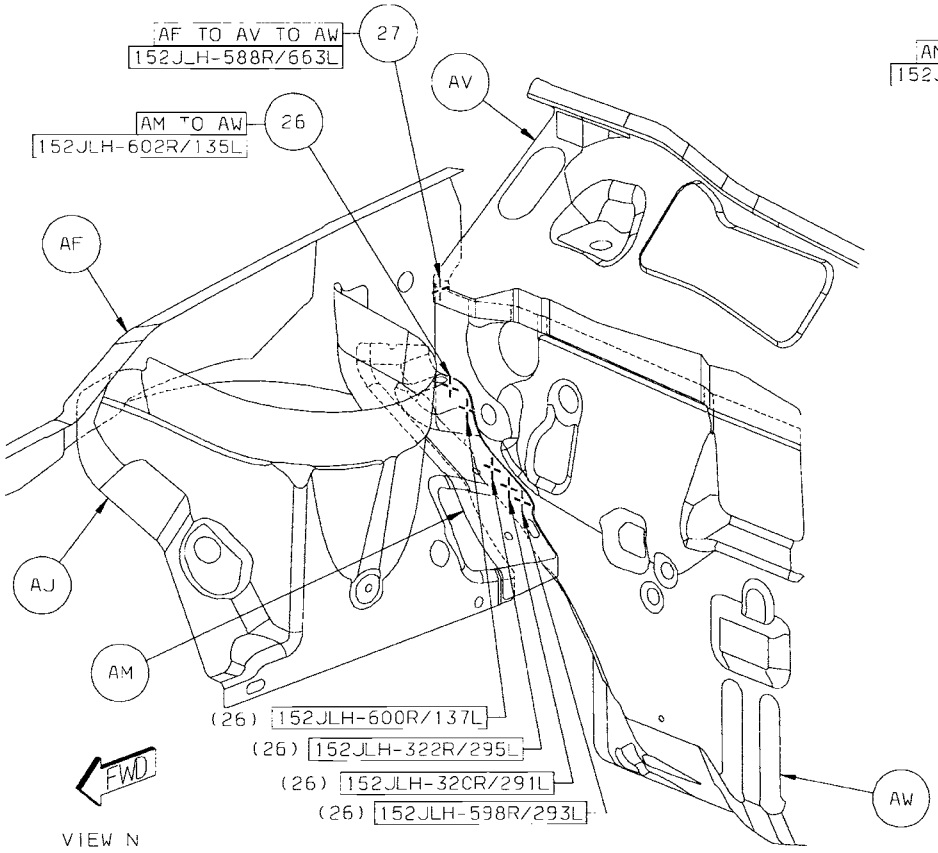

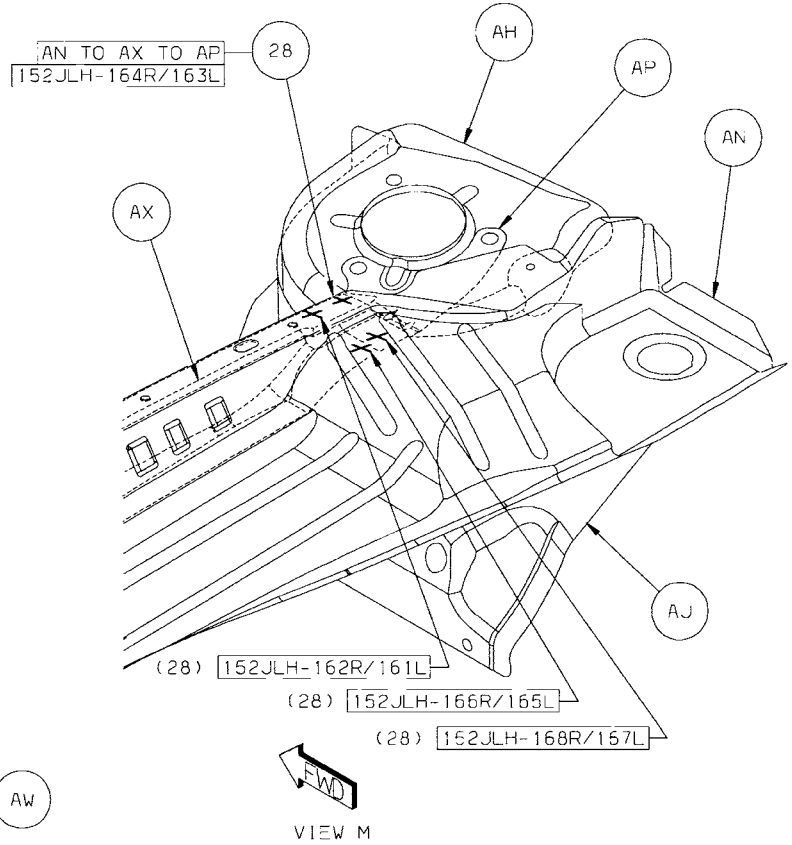

Back to Index

29 AZ TO AW TO AY 2R S/WELDS (ORD)
30 BA TO AW TO AC 1R S/WELD (ORD)
31 BA TO AW TO AY 2R S/WELDS (ORD)
32 BB TO AM TO AC 2/SD S/WELDS (ORD)
33 BB TO AC TO AJ 3/SD S/WELDS (ORD)
34 BB TO AY 4/SD S/WELDS (ORD)
35 BB TO AY TO AW 1/SD S/WELD (ORD)
36 BB TO AW 2/SD S/WELDS (ORD)

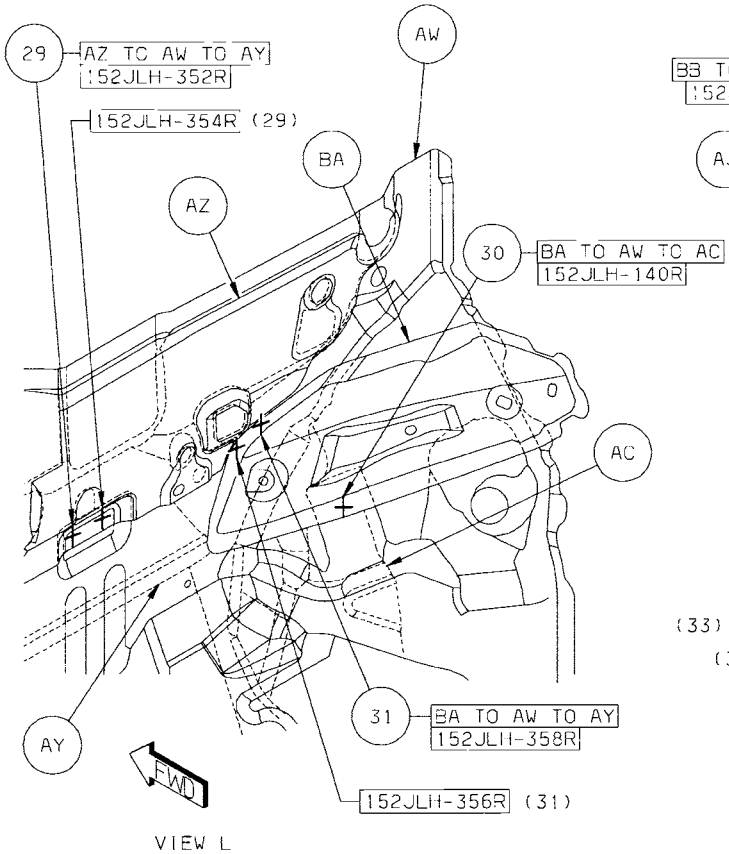

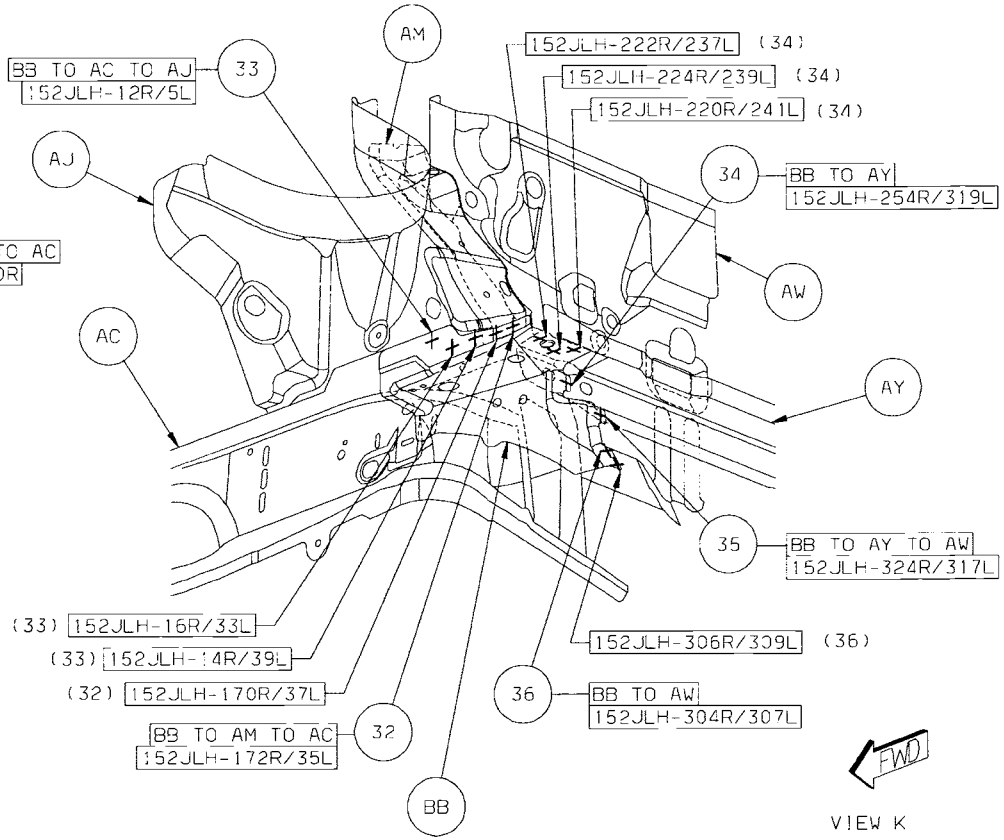

Back to Index

37 AY TO AW TO AZ 8 S/WELDS (ORD)
38 AY TO AW 10 S/WELDS (ORD)

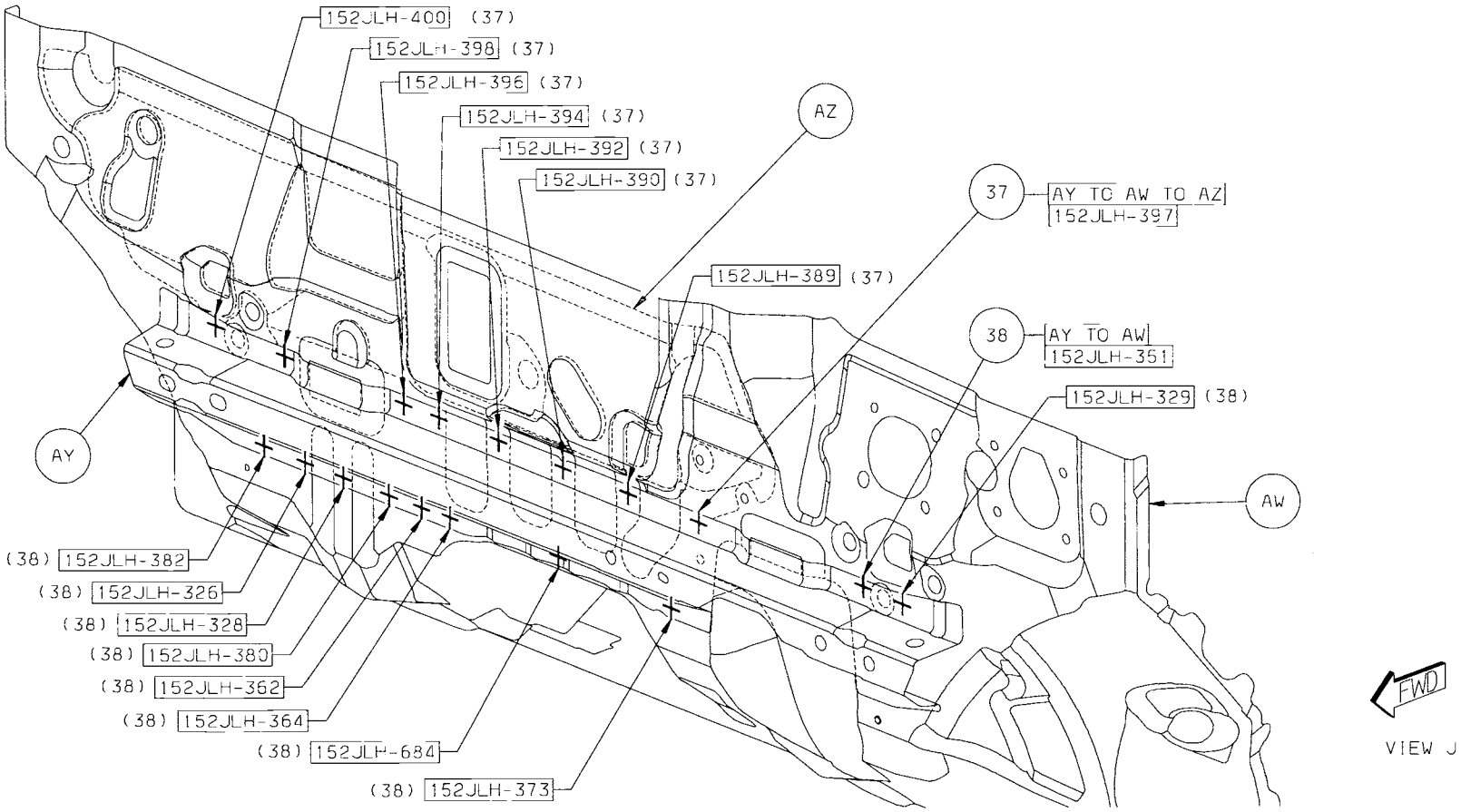

Back to Index

39 BF TO BC 6/SD S/WELDS (ORD)
40 AW TO BE TO BC 4/SD S/WELDS (ORD)
41 BD TO AW 3/SD S/WELDS (ORD)
42 BG TO BC 2/SD S/WELDS (ORD)

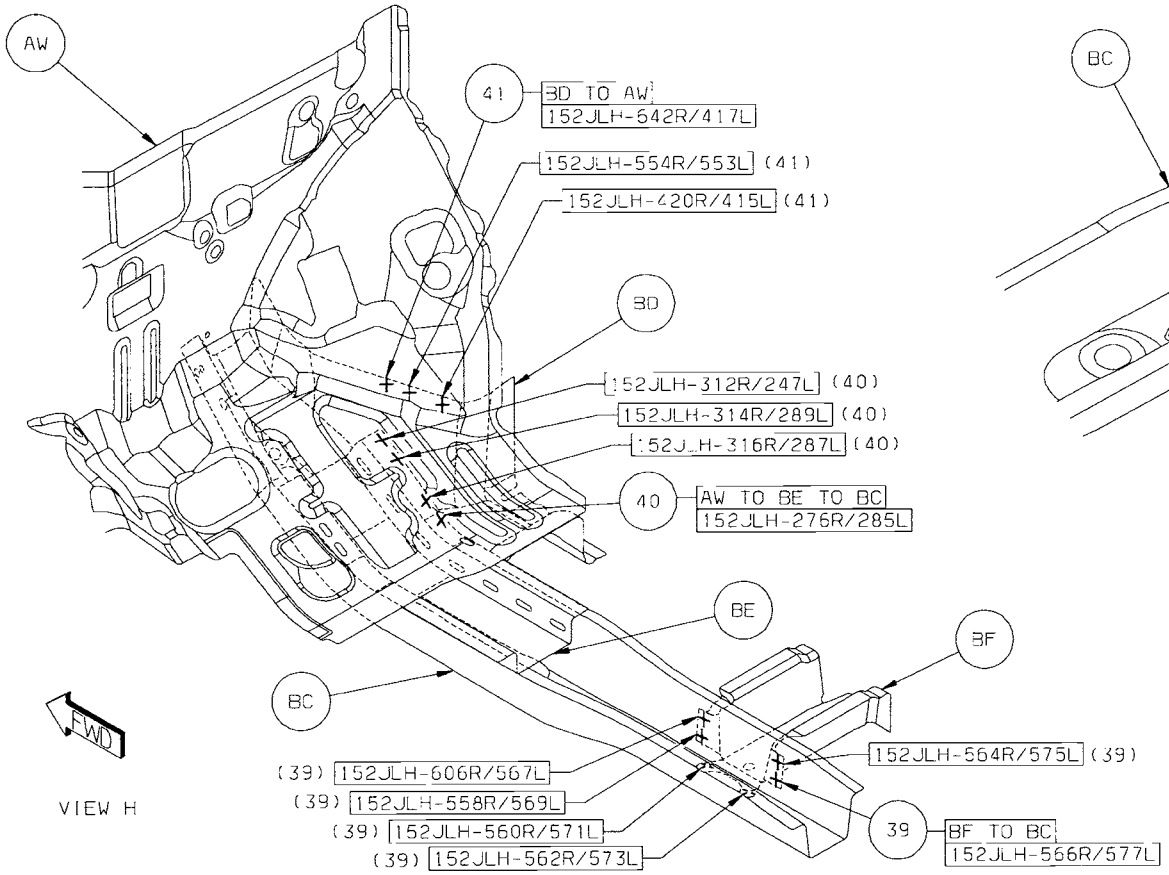

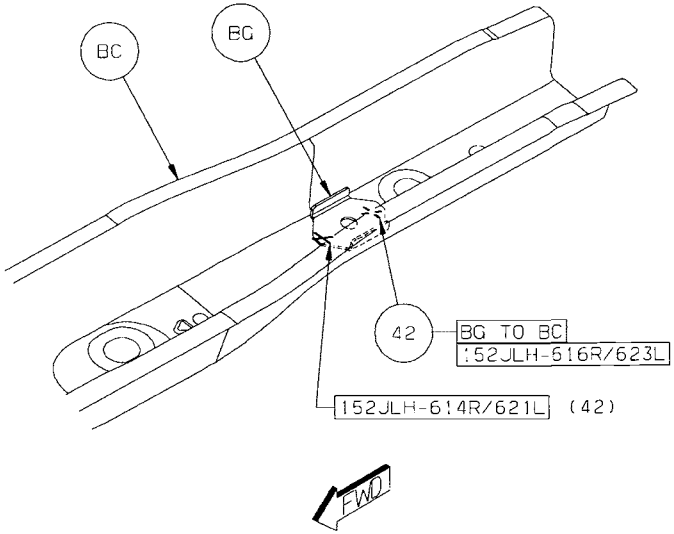

Back to Index

43 BH TO AW 2/SD S/WELDS (ORD)
44 BJ TO AW 3/SD S/WELDS (ORD)
45 AC TO AW 1/SD S/WELD (ORD)

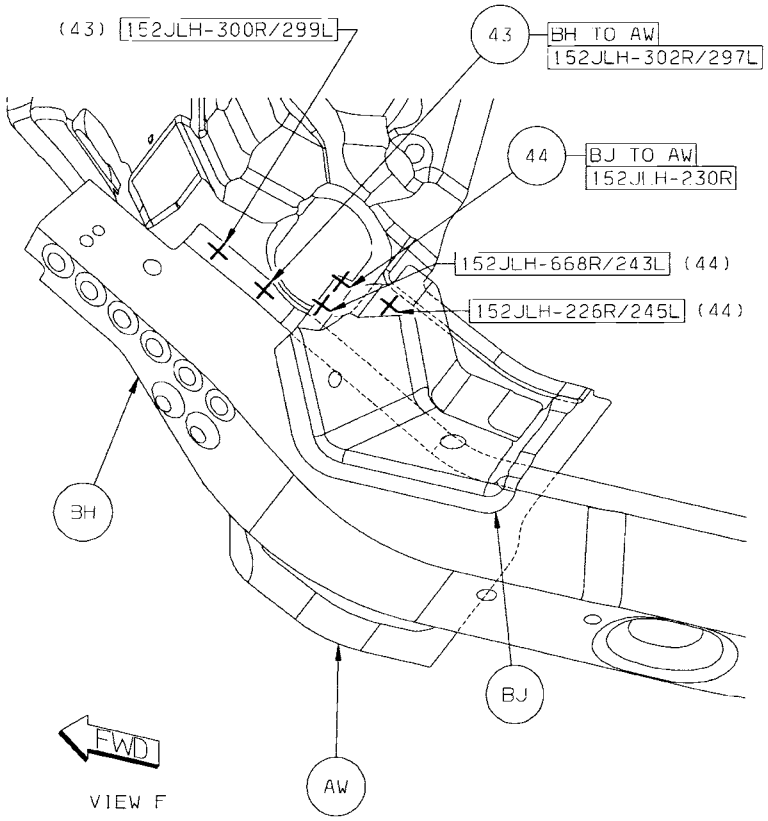

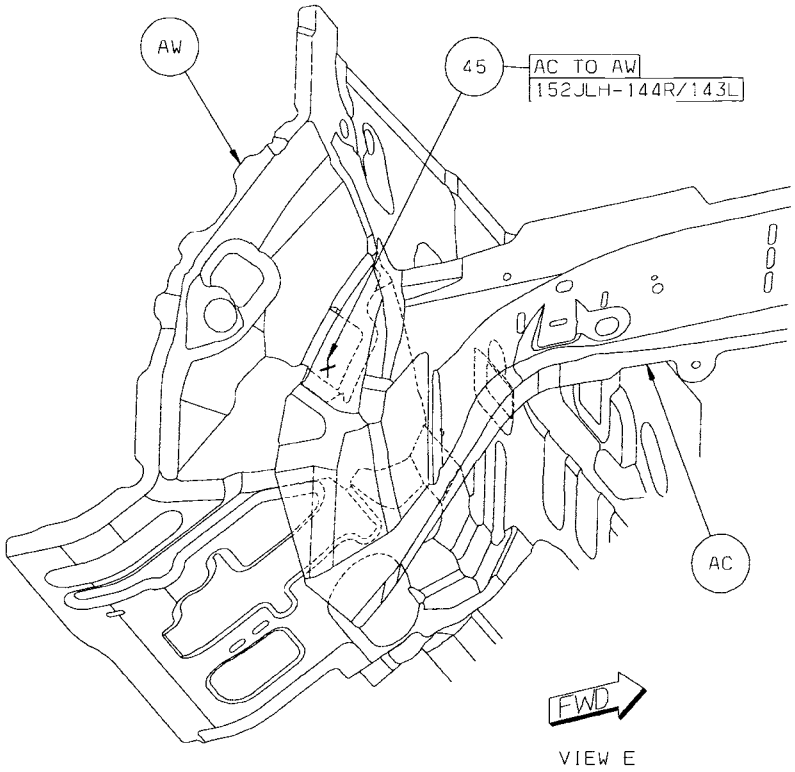

Back to Index

46 BJ TO BK TO AW 2R S/WELDS (ORD)
47 BJ TO AW 1R S/WELD (ORD)
48 BJ TO BL 3/SD S/WELDS (ORD)
49 BJ TO BL 2L S/WELDS (ORD)
50 BJ TO AW 1L S/WELD (ORD)
51 AW TO BL TO BJ 1L S/WELD (ORD)

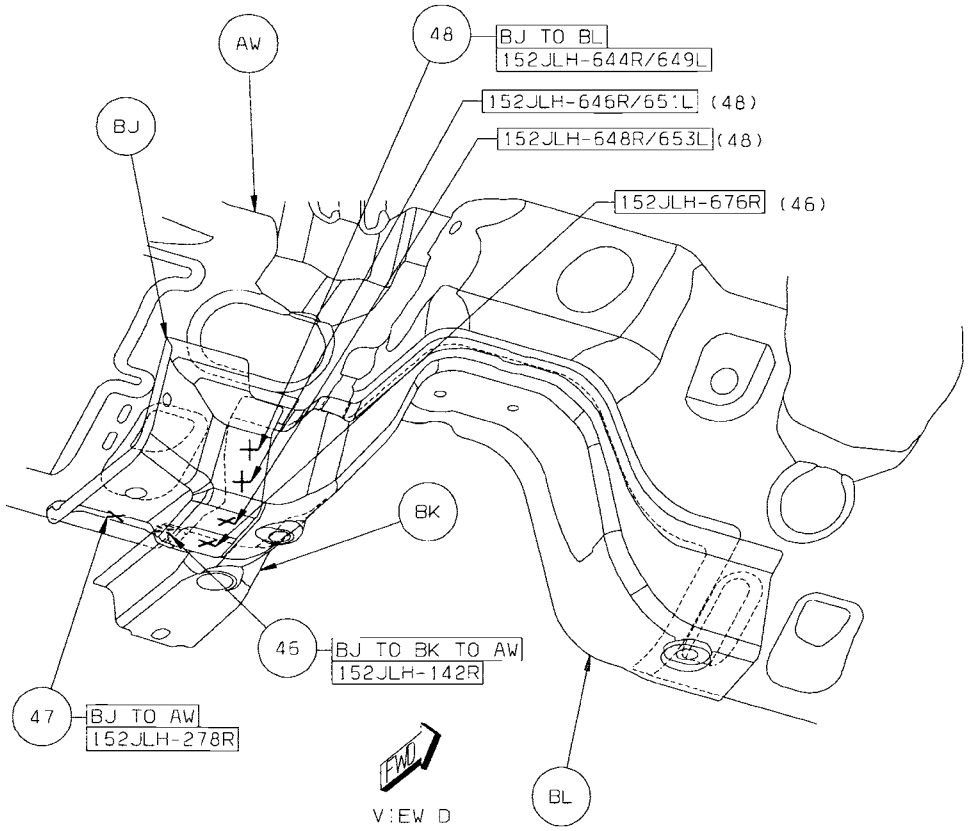

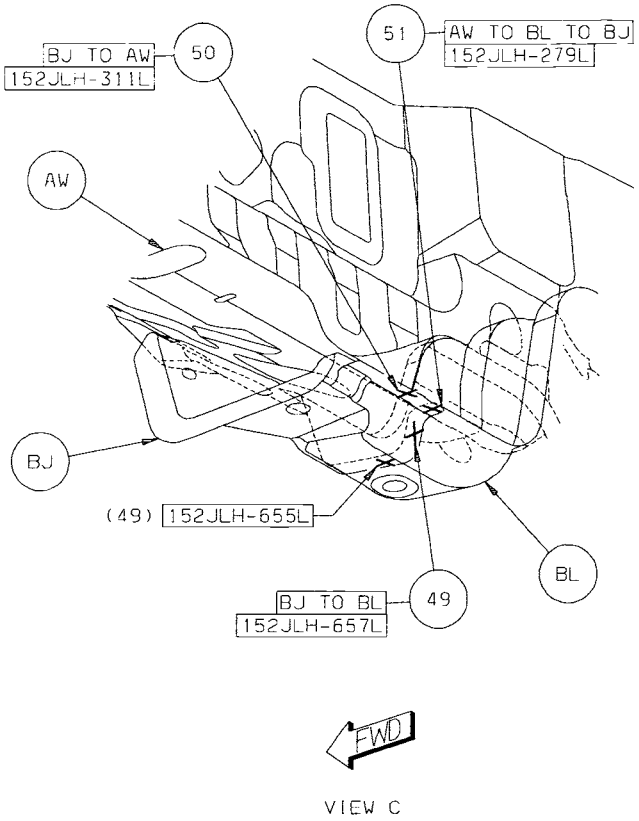

Back to Index

52 BL TO BM S/WELD (ORD)
53 BL TO BM TO AW 9 S/WELDS (ORD)
54 BK TO BL TO BM 2 S/WELDS (ORD)

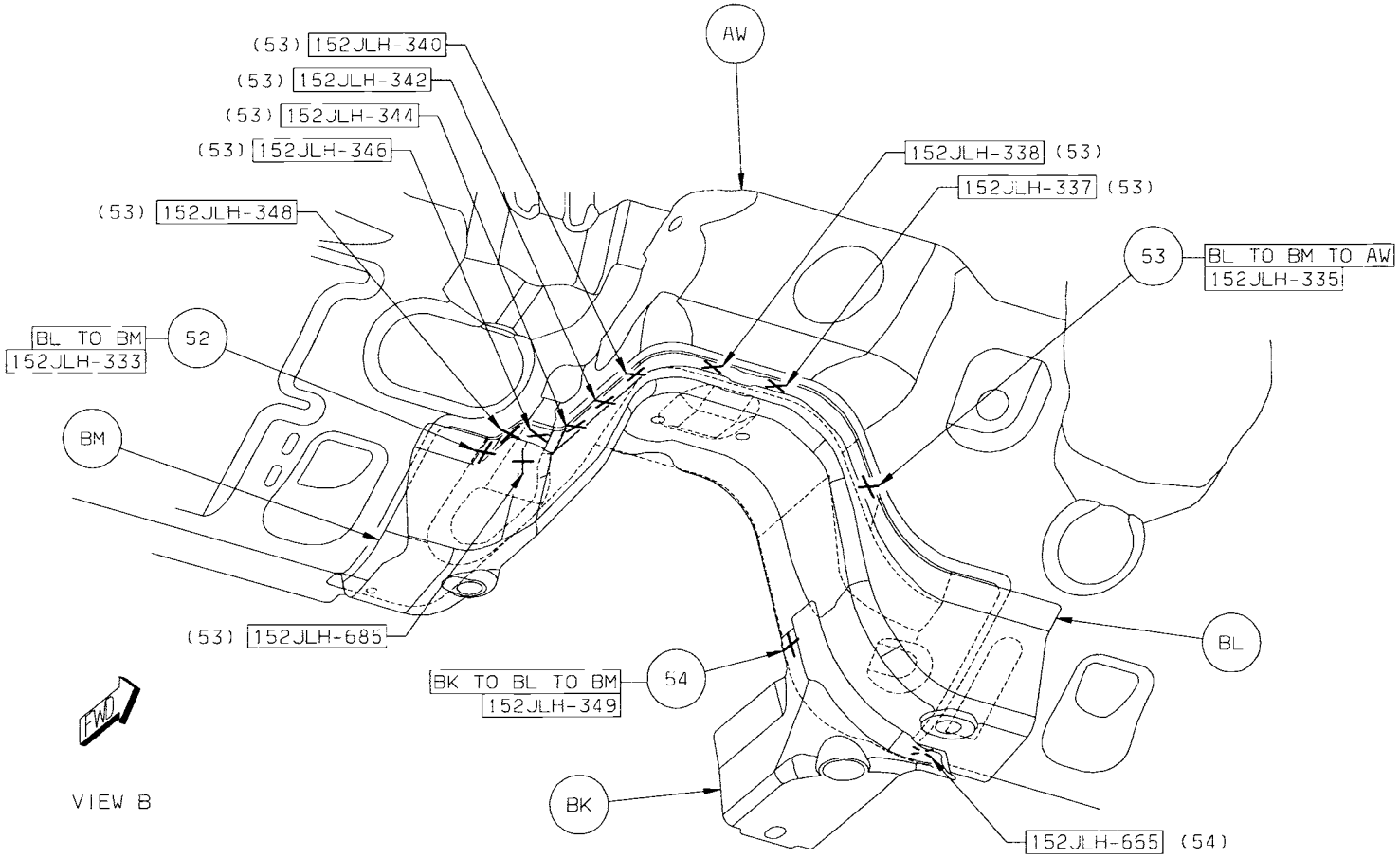

Back to Index

55 BM TO BL 2 S/WELDS (ORD)
56 BN TO AW TO AZ 6 S/WELDS (ORD)
57 BP TO AW TO AB 2 S/WELDS (ORD)
58 BP TO AW TO AZ 1 S/WELD (ORD)
59 BR TO AW TO AZ 4 S/WELDS (ORD)
60 BK TO BL TO BM 1 S/WELD (ORD)

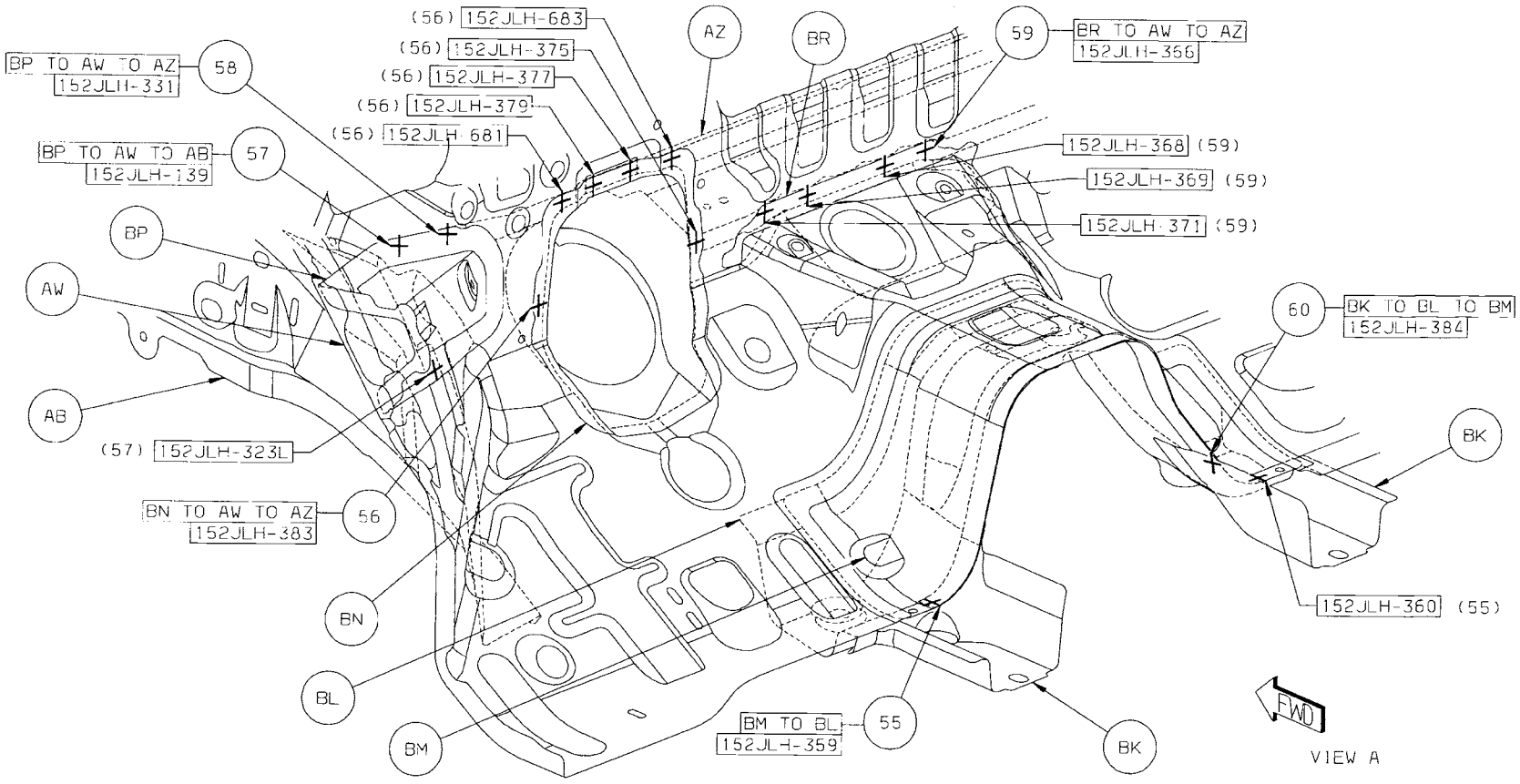

Back to Index

61 BS TO AY 2 PROJ WELDS (ORD)
62 BT TO AW 1/SD BEAD (ORD)

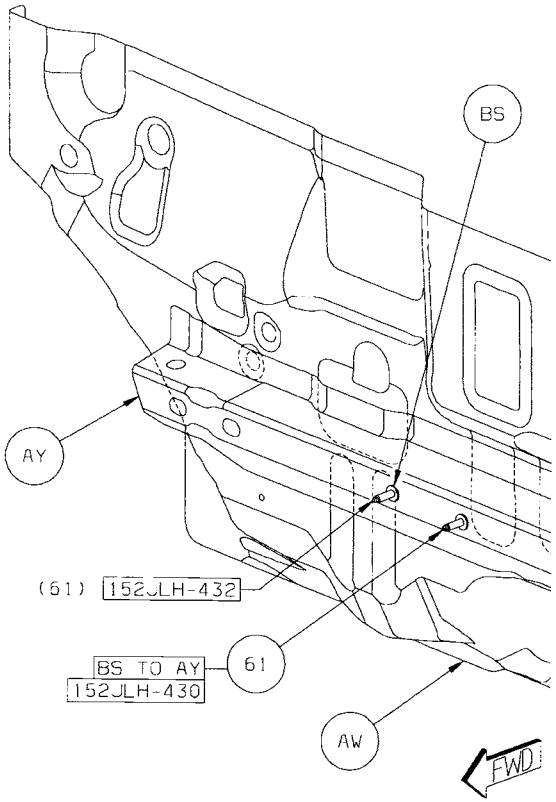

VIEW BZ

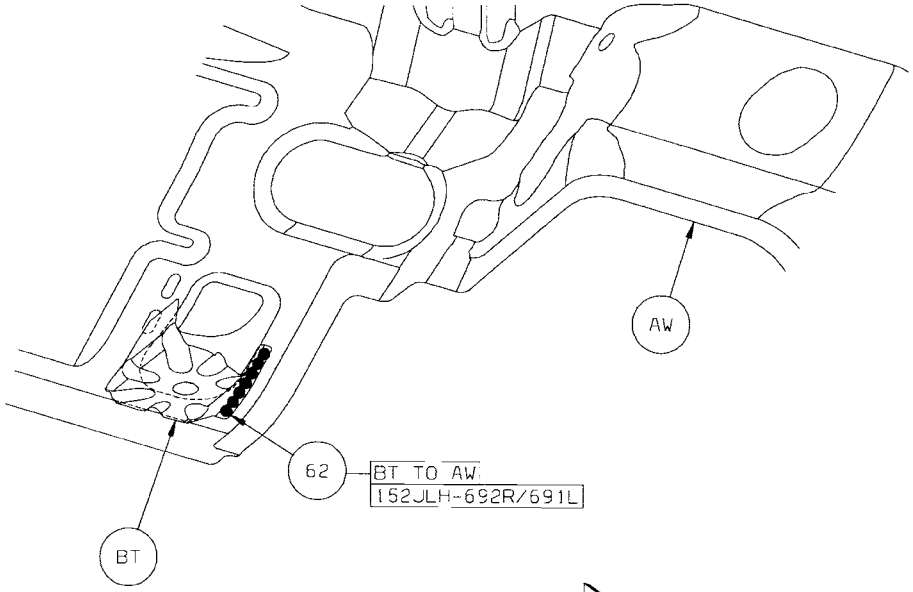

VIEW BY

Back to Index

63 AP TO AX 1/SD GUM DROP (ORD)
64 AL TO AC 3 FCAW (ORD)

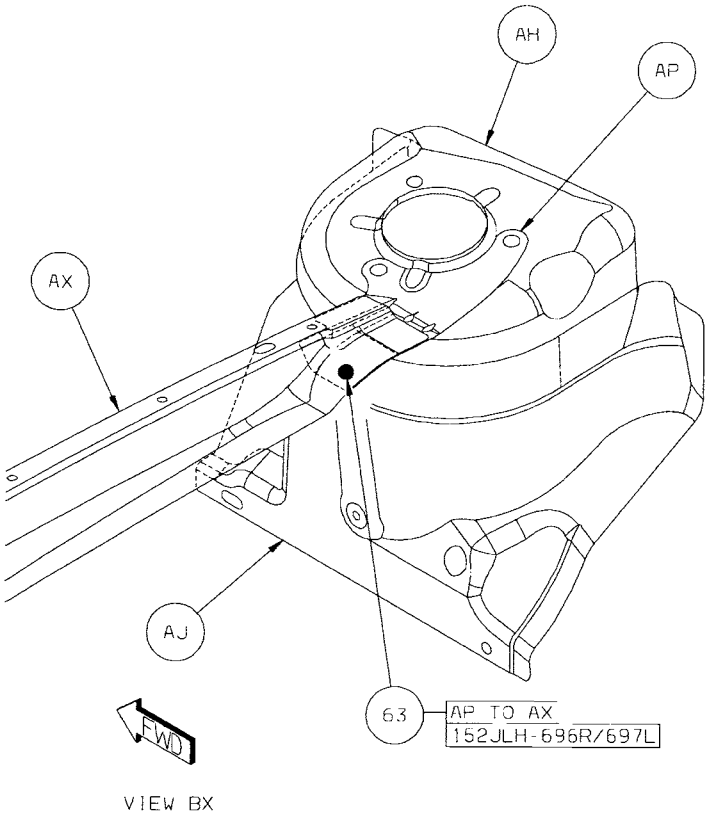

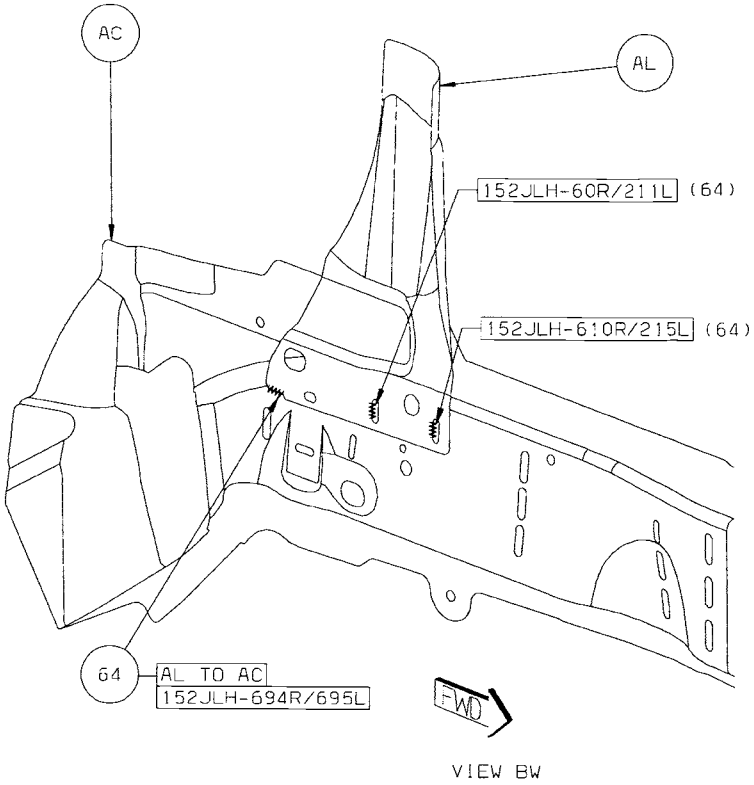

Back to Index

65 AJ TO AD 1R FCAW (ORD)
66 AG TO AD 1R FCAW (ORD)
67 AG TO AC 1L FCAW (ORD)
68 AJ TO AC 1L FCAW (ORD)

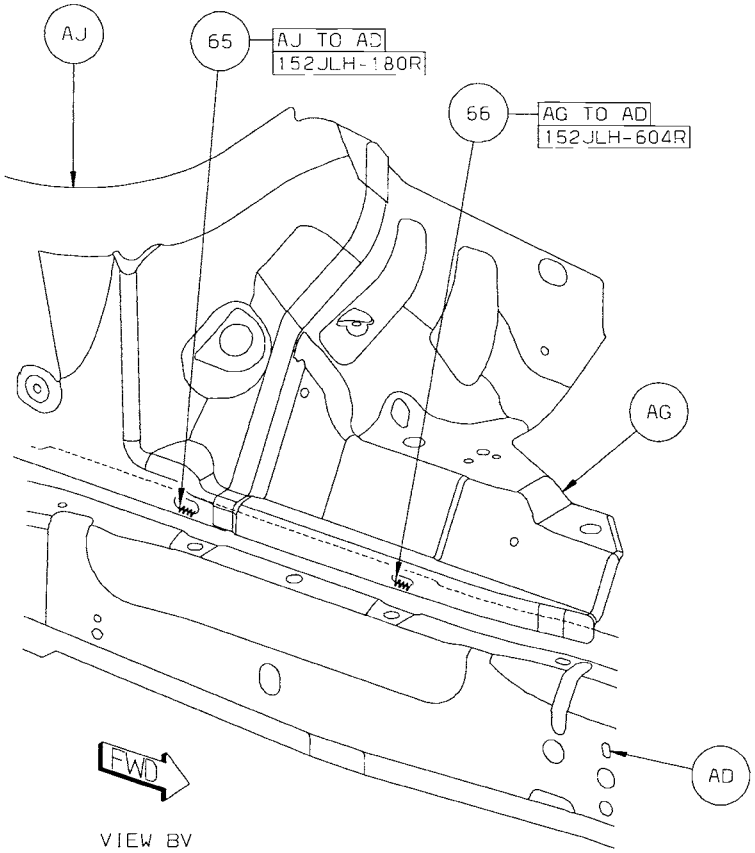

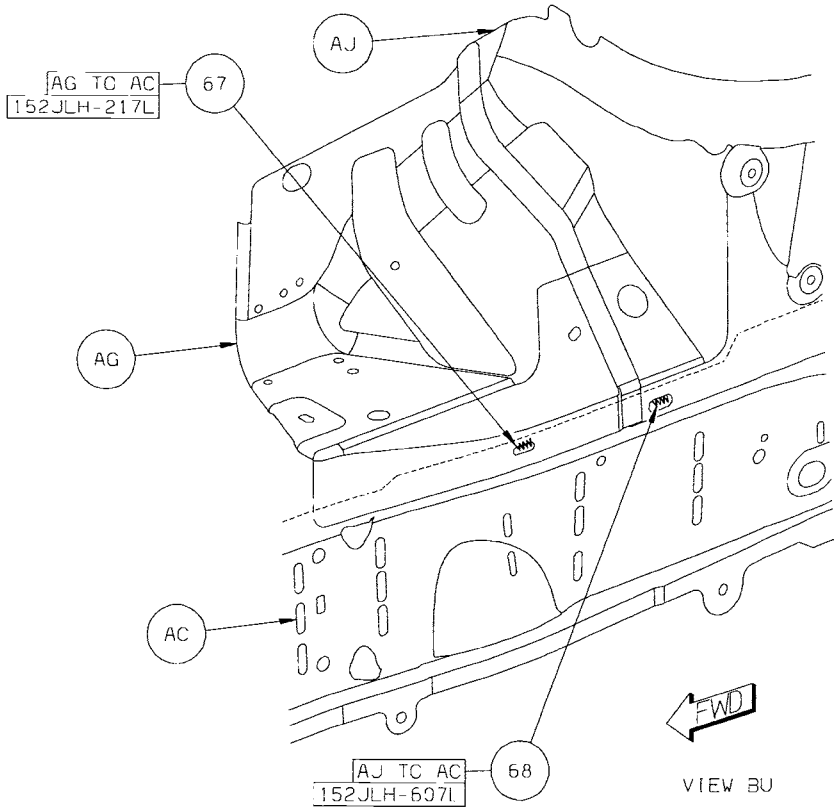

Back to Index

69 AW TO BE 2/SD FCAW (CRT)
70 AW TO BE 1/SD FCAW (ORD)

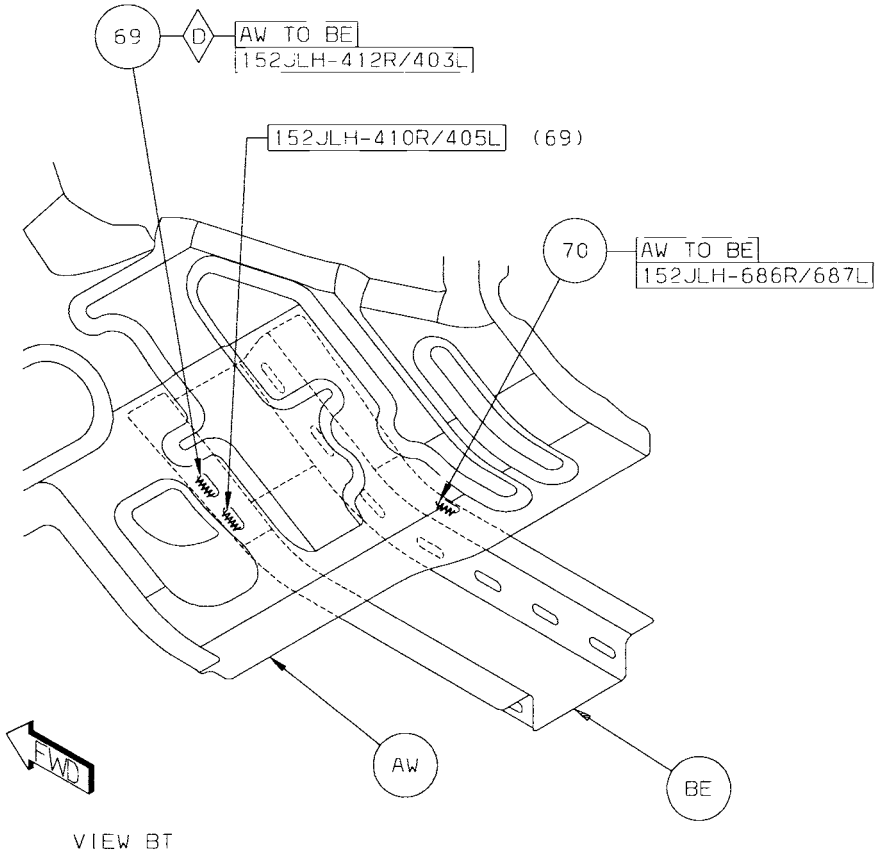

Back to Index

CHRYSLER SEBRING/DODGE AVENGER ENGINE BOX (COMMON) SECTION

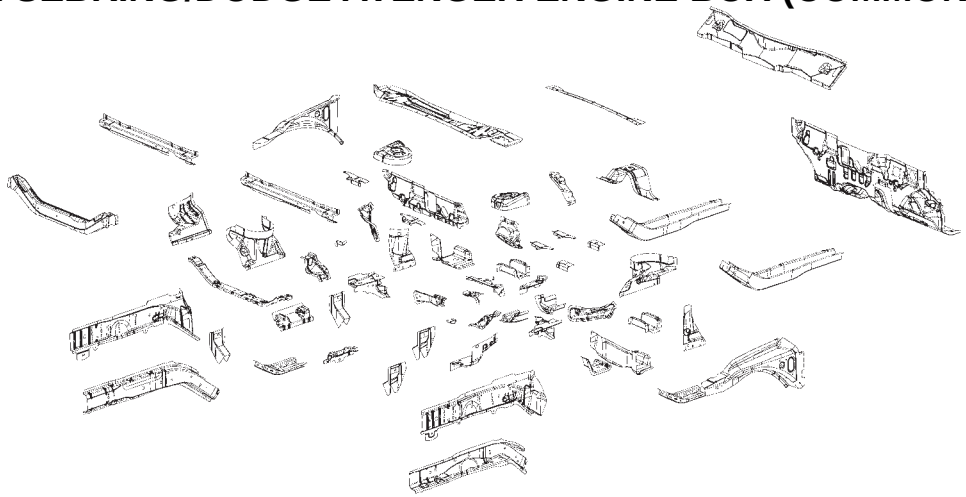

AA CROSSMEMBER – FRT UPR –
AB GUSSET – REINF –
AB GUSSET – REINF –
AC RAIL – FRT OTR RT –
AC RAIL – FRT OTR LT –
AD PANEL – FRT SIDE RAIL INR RT –
AD PANEL – FRT SIDE RAIL INR LT –
AE CROSSMEMBER – FRT LWR –
AF BEAM – LOAD PATH INR UPR RT –
AF BEAM – LOAD PATH INR UPR LT –
AG SHIELD – FENDER RT –
AG SHIELD – FENDER LT –
AH REINF – CAP –
AH REINF – CAP –
AJ PANEL – SHOCK –
AJ PANEL – SHOCK –
AK GUSSET – ENGINE MOUNT –
AL GUSSET – WHEELHOUSE –
AL GUSSET – WHEELHOUSE –
AM REINF – SHOCK TOWER MOUNTING FRT RT –
AM REINF – SHOCK TOWER MOUNTING FRT LT –
AN PANEL – COWL TOP LOWER –
AP GUSSET – SHOCK –
AP GUSSET – SHOCK –
AR REINF – BRACE –
AR REINF – BRACE –
AS BRACKET – FRT ENGINE MOUNT ATTACH –
AT BRACKET – FRT ENGINE MOUNT RT –
AT BRACKET – TRANS MOUNT LT – TRANS MOUNT TO BODY
AU GUSSET – TRANSMISSION –
AV PANEL – COWL TOP INNER –
AW PANEL – DASH –
AX BRACE – FRT SHOCK TOWER –
AY CROSSMEMBER – DASH –
AZ CARRIER – PATCH –
BA CROSSMEMBER – DASH –
BB BRACE – FRT SIDE FRT RT –
BB BRACE – FRT SIDE FRT LT –
BC PANEL – EXTENSION FRT RAIL INR RT –
BD BRACE – TORQUE BOX RT –
BD BRACE – TORQUE BOX LT –
BE REINF – EXTENSION FRT RAIL INR RT–
BE REINF – EXTENSION FRT RAIL INR LT–
BH REINF – EXTENSION FRT RAIL INR RT–
BH REINF – EXTENSION FRT RAIL INR LT–
BJ EXTENSION – DASH LWR –
BJ EXTENSION – DASH LWR –
BK EXTENSION – RAIL FRT RT –
BK EXTENSION – RAIL FRT LT –
BL CROSSMEMBER – DASH –
BM PANEL – DASH LWR –
BN BRACKET – STEERING SHAFT –
BP CROSSMEMBER – DASH –
BR REINF – TUNNEL –
BS STUD.WELD/EXTERNAL – PNT.CUTTER.PILOT.PT.SPECIAL – HEAT SHIELD TO UPR DASH X-MBR
BT BULKHEAD – FRT SUSP MOUNTING RR RT –
BT BULKHEAD – FRT SUSP MOUNTING RR LT –
BU END CAP – REINF –
BU END CAP – REINF –

Back to Index

PARTS IDENTIFICATION LEGEND, OVERVIEW 19

AA CROSSMEMBER – FRT UPR –
AB GUSSET – REINF –
AB GUSSET – REINF –
AC RAIL – FRT OTR RT –
AC RAIL – FRT OTR LT –
AD PANEL – FRT SIDE RAIL INR RT –
AD PANEL – FRT SIDE RAIL INR LT –
AE CROSSMEMBER – FRT LWR –
AF BEAM – LOAD PATH INR UPR RT –
AF BEAM – LOAD PATH INR UPR LT –
AG SHIELD – FENDER RT –
AG SHIELD – FENDER LT –
AH REINF – CAP –
AH REINF – CAP –
AJ PANEL – SHOCK –
AJ PANEL – SHOCK –
AK GUSSET – ENGINE MOUNT –
AL GUSSET – WHEELHOUSE –
AL GUSSET – WHEELHOUSE –
AM REINF – SHOCK TOWER MOUNTING FRT RT –
AM REINF – SHOCK TOWER MOUNTING FRT LT –
AN PANEL – COWL TOP LOWER –
AP GUSSET – SHOCK –
AP GUSSET – SHOCK –
AR REINF – BRACE –
AR REINF – BRACE –
AS BRACKET – FRT ENGINE MOUNT ATTACH –
AT BRACKET – FRT ENGINE MOUNT RT –
AT BRACKET – TRANS MOUNT LT – TRANS MOUNT TO BODY
AU GUSSET – TRANSMISSION –
AV PANEL – COWL TOP INNER –
AW PANEL – DASH –
AX BRACE – FRT SHOCK TOWER –
AY CROSSMEMBER – DASH –
AZ CARRIER – PATCH –
BA CROSSMEMBER – DASH –
BB BRACE – FRT SIDE FRT RT –
BB BRACE – FRT SIDE FRT LT –
BC PANEL – EXTENSION FRT RAIL INR RT –
BD BRACE – TORQUE BOX RT –
BD BRACE – TORQUE BOX LT –
BE REINF – EXTENSION FRT RAIL INR RT–
BE REINF – EXTENSION FRT RAIL INR LT–
BH REINF – EXTENSION FRT RAIL INR RT–
BH REINF – EXTENSION FRT RAIL INR LT–
BJ EXTENSION – DASH LWR –
BJ EXTENSION – DASH LWR –
BK EXTENSION – RAIL FRT RT –
BK EXTENSION – RAIL FRT LT –
BL CROSSMEMBER – DASH –
BM PANEL – DASH LWR –
BN BRACKET – STEERING SHAFT –
BP CROSSMEMBER – DASH –
BR REINF – TUNNEL –
BS STUD.WELD/EXTERNAL – PNT.CUTTER.PILOT.PT.SPECIAL – HEAT SHIELD TO UPR DASH X-MBR
BT BULKHEAD – FRT SUSP MOUNTING RR RT –
BT BULKHEAD – FRT SUSP MOUNTING RR LT –
BU END CAP – REINF –
BU END CAP – REINF –

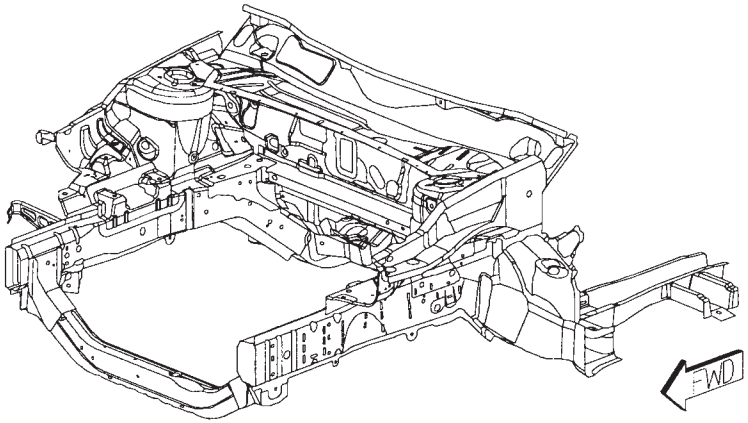

Back to Index

WELD LAYOUT LOCATION GUIDE

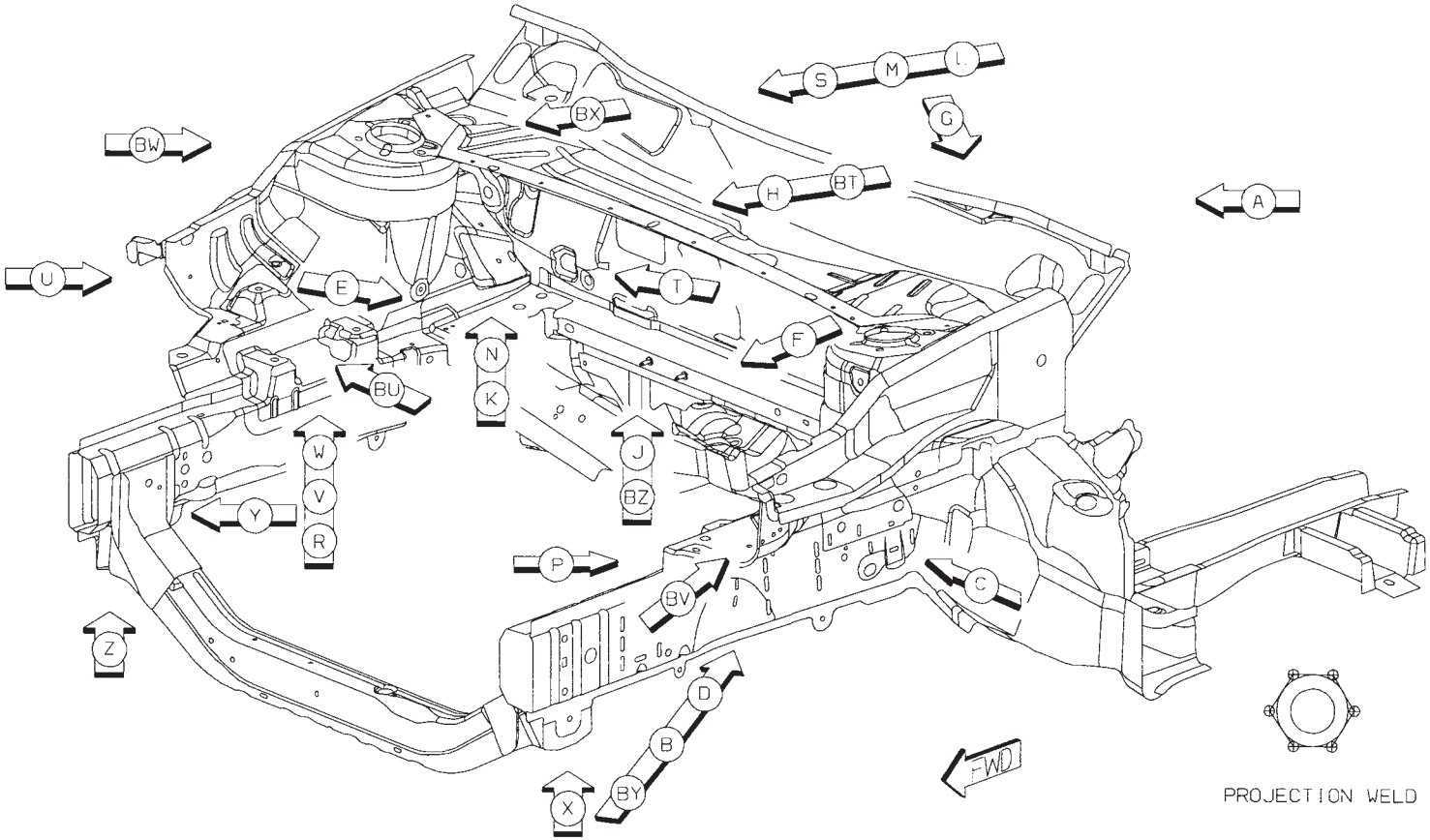

Back to Index

01 AA TO AC 4/SD S/WELDS (ORD)
02 AA TO AD TO AC 2/SD S/WELDS (ORD)
03 AB TO AD 6/SD S/WELDS (ORD)

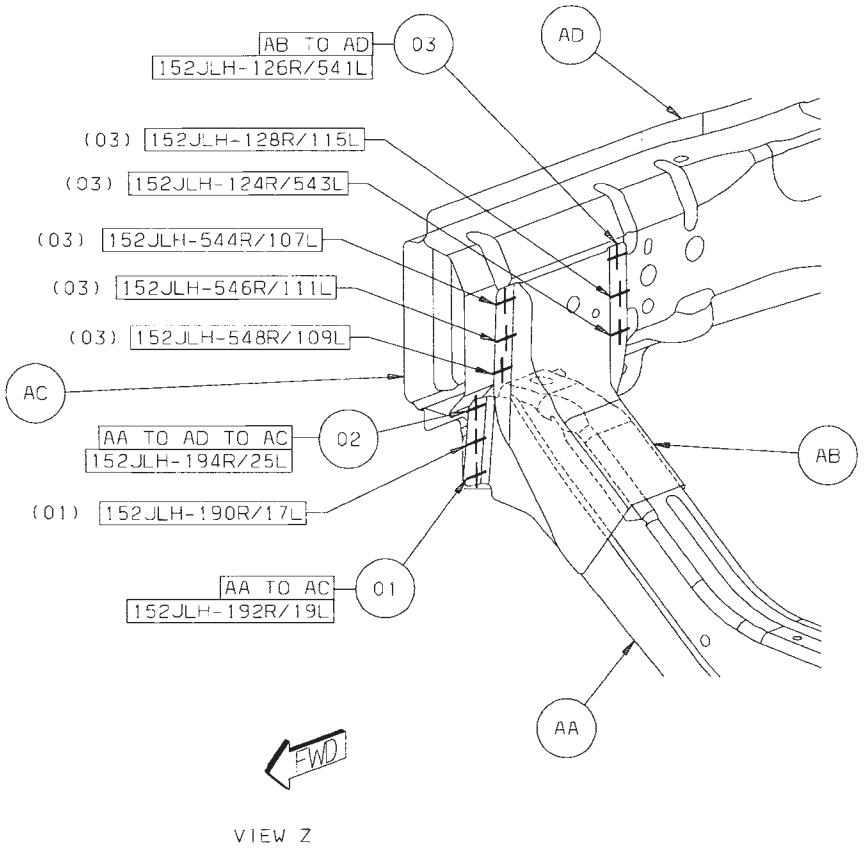

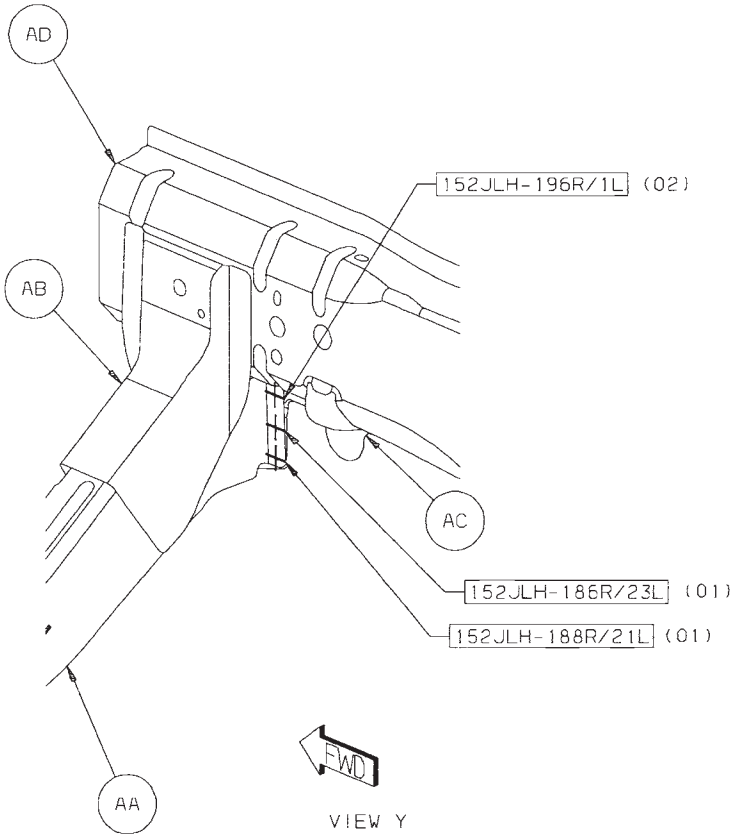

Back to Index

04 AE TO AC 2/SD S/WELDS (ORD)
05 AG TO AF TO BU 1/SD S/WELD (ORD)
06 AC TO AD TO AG 4R/2L S/WELDS (ORD)

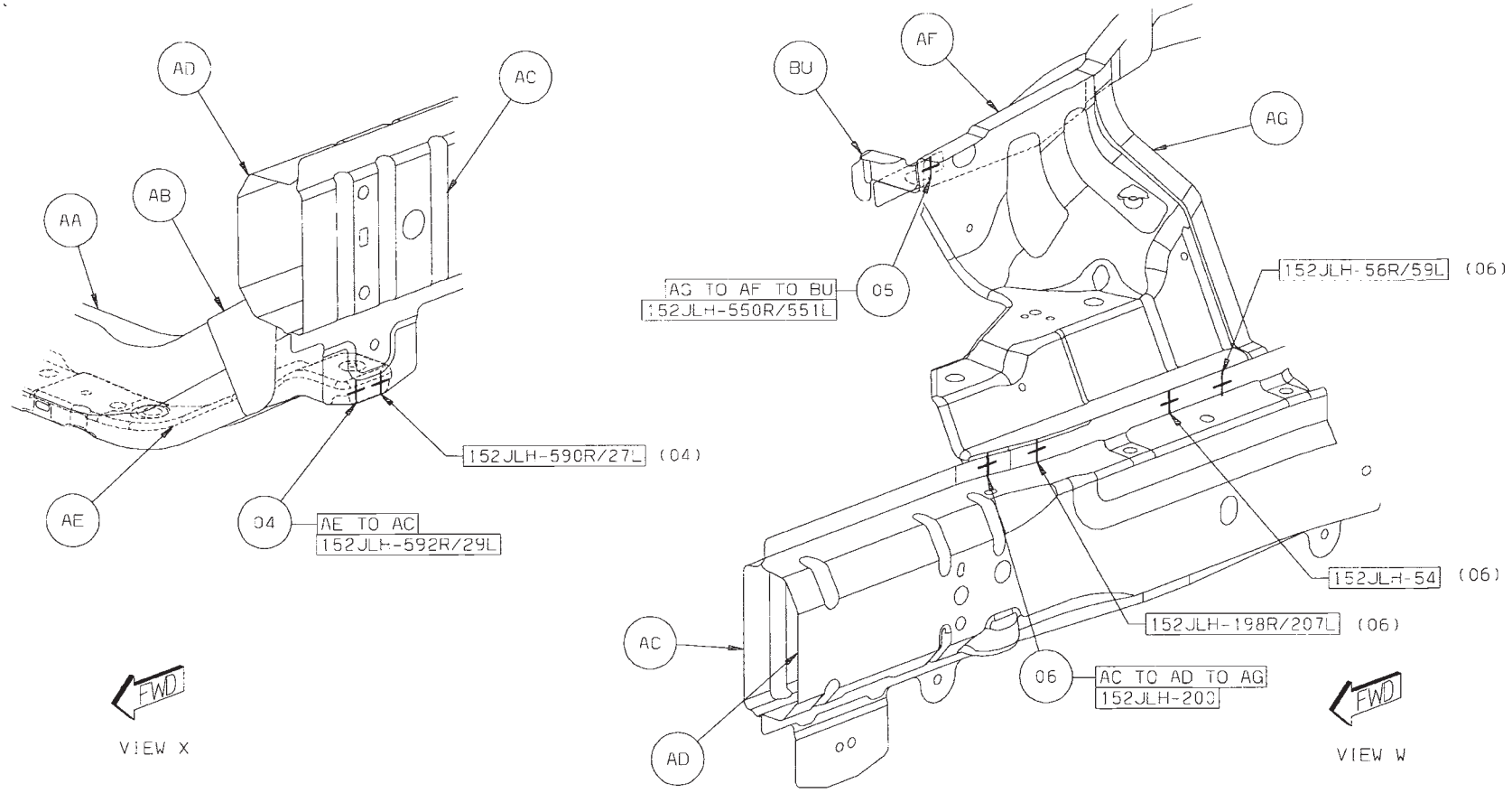

Back to Index

07 AG TO AF 5/SD S/WELDS (ORD)
08 AH TO AF 7/SD S/WELDS (ORD)
09 AJ TO AG TO AF 1/SD S/WELD (ORD)
10 AK TO AF 5/SD S/WELDS (ORD)

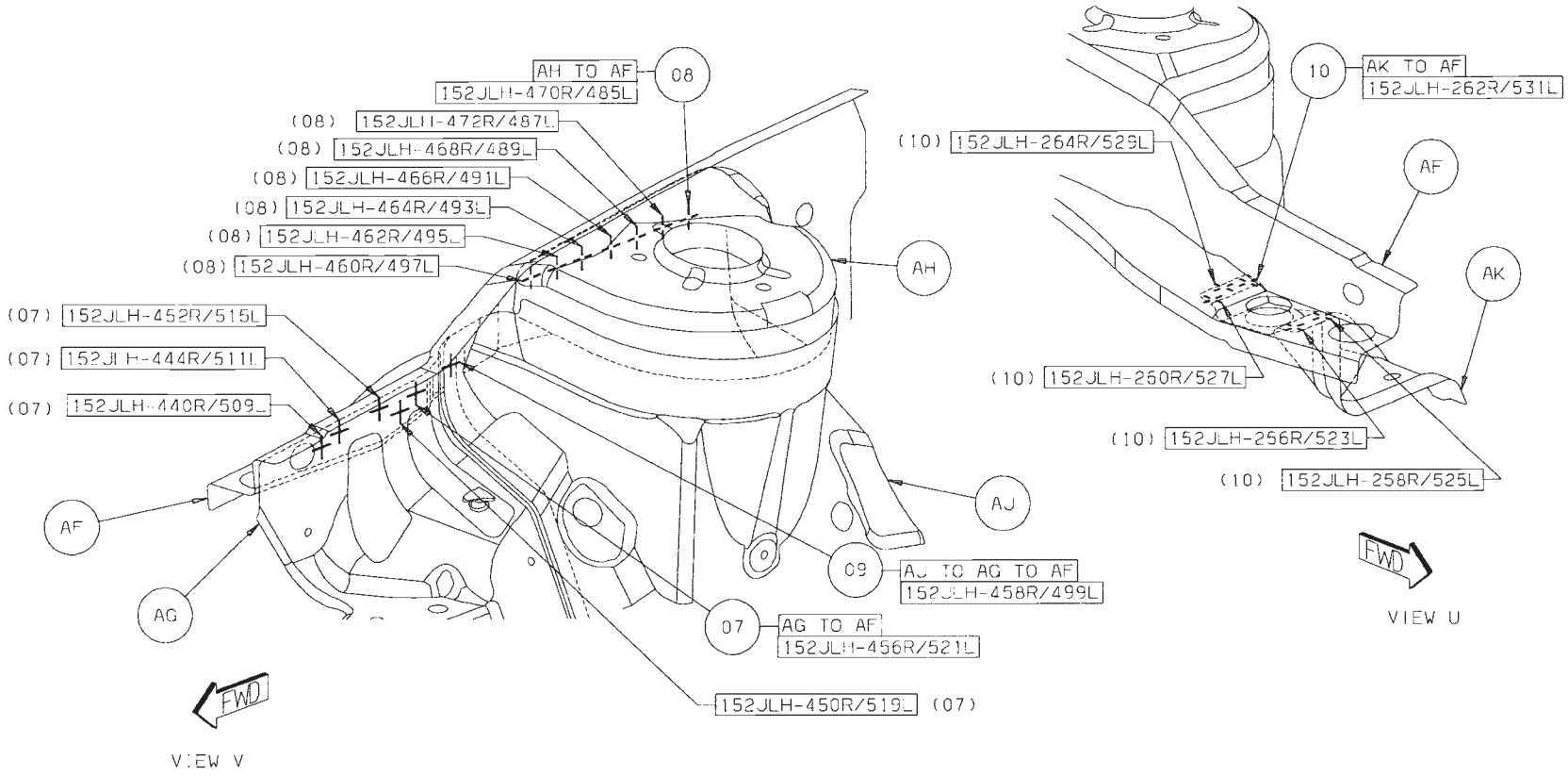

Back to Index

11 AJ TO AF 2/SD S/WELDS (ORD)
12 AM TO AJ TO AF 1/SD S/WELDS (ORD)
13 AC TO AJ TO AL 1/SD S/WELD (ORD)
14 AN TO AP TO AH 2/SD S/WELDS (ORD)
15 AN TO AR 4/SD S/WELDS (ORD)

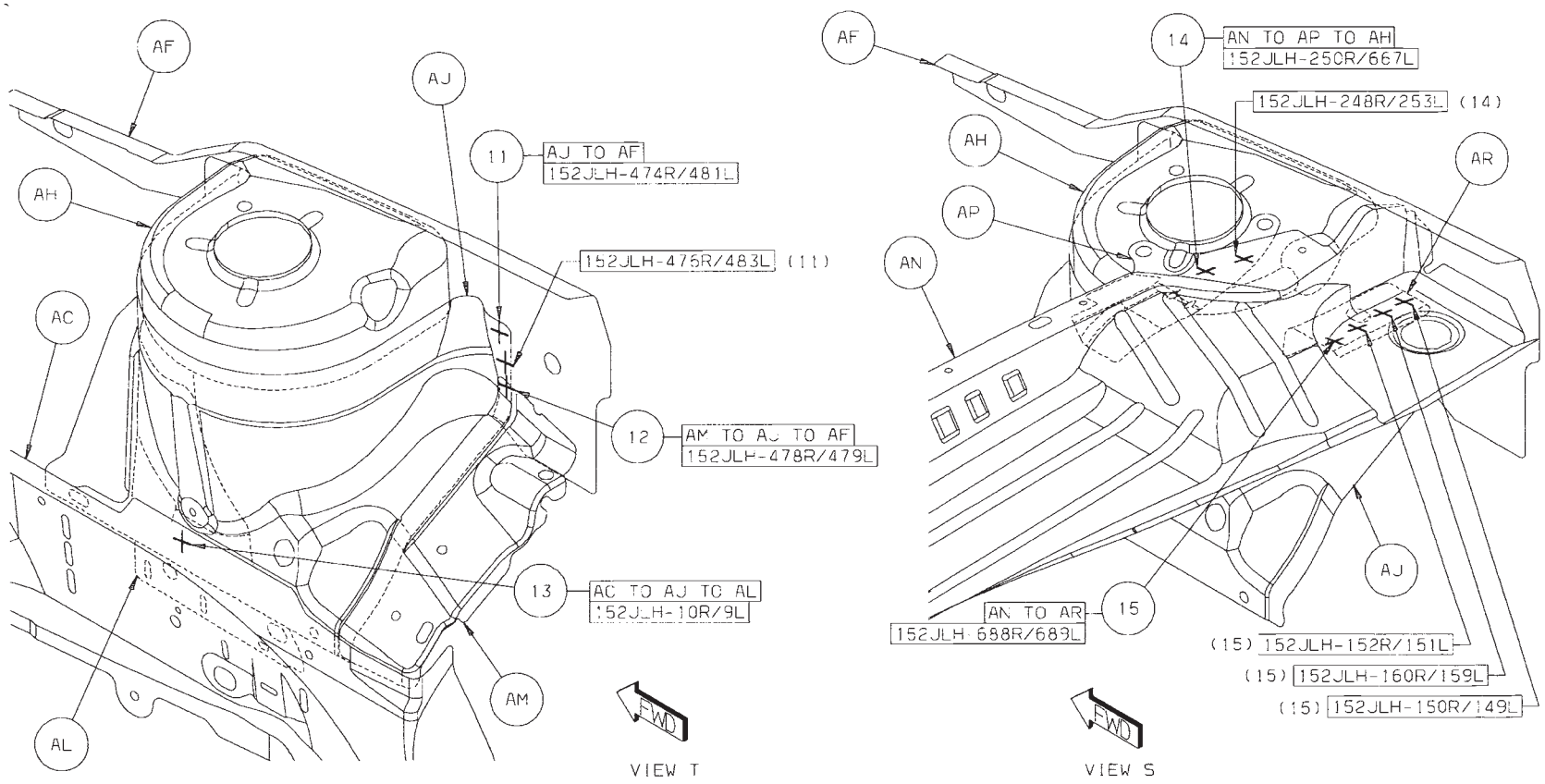

Back to Index

16 AT TO AS TO AG 2R S/WELDS (CRT)
17 AT TO AG 4R S/WELDS (CRT)
18 AT TO AJ 1R S/WELD (CRT)
19 AT TO AG 1L S/WELD (CRT)
20 AU TO AT TO AG 2L S/WELDS (CRT)
21 AC TO AD TO AG 1L S/WELD (CRT)
22 AT TO AG 1L S/WELD (CRT)
23 AT TO AJ 1L S/WELD (CRT)
24 AT TO AJ TO AG 1L S/WELD (CRT)
25 AD TO AC TO AG 1L S/WELD (CRT)

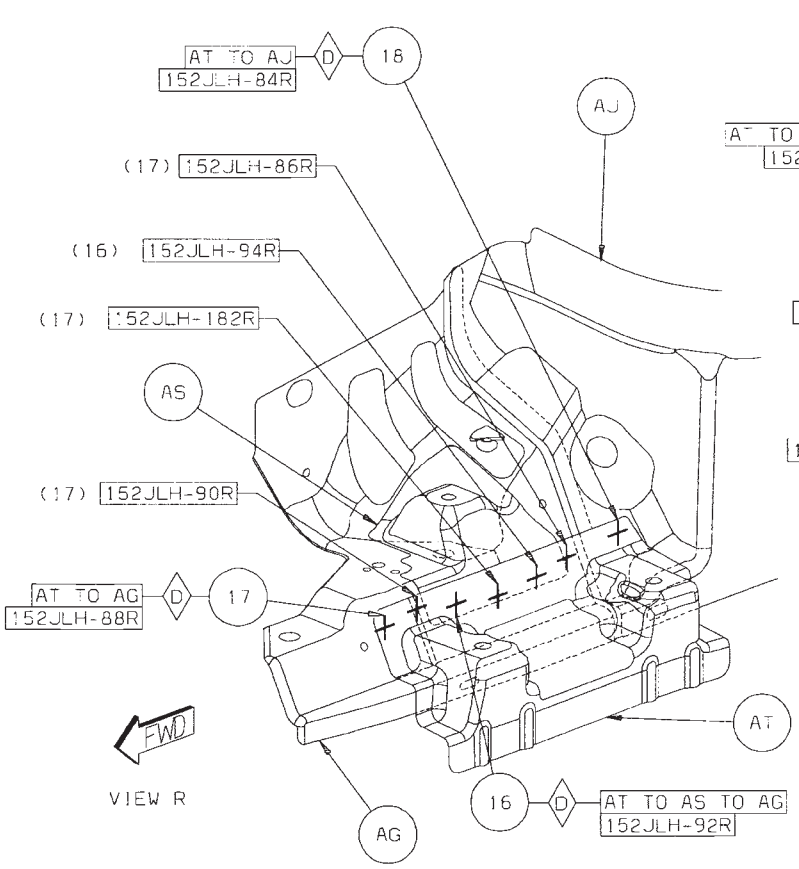

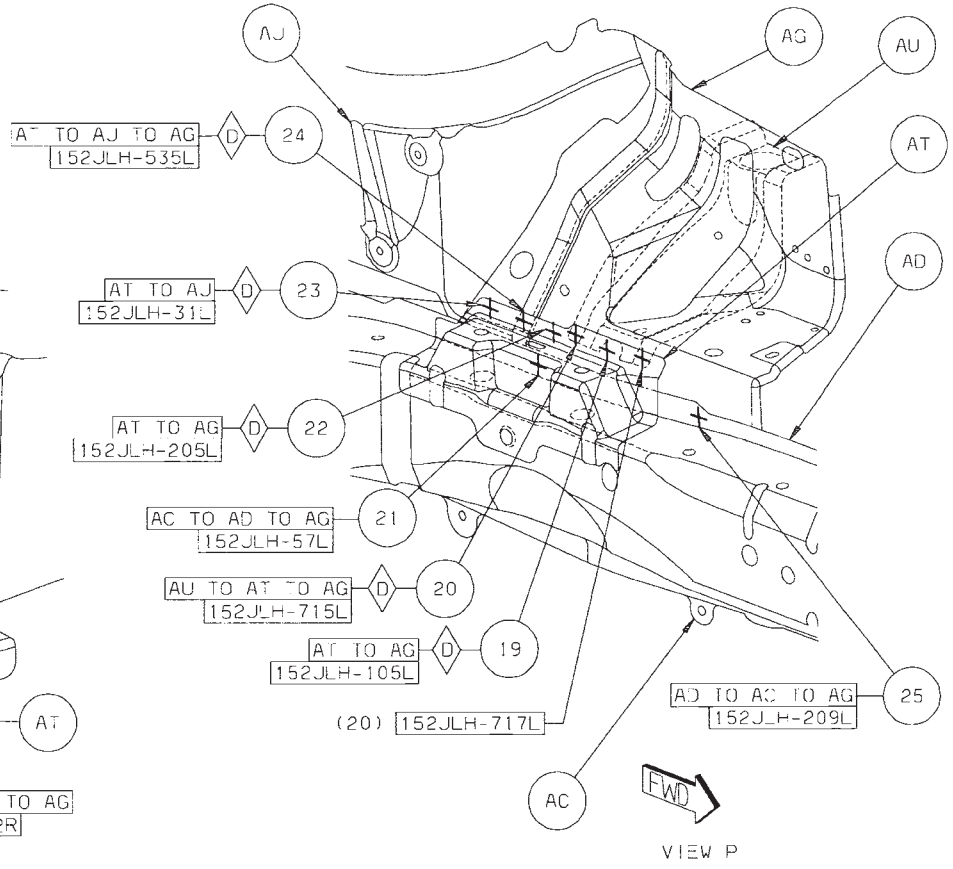

Back to Index

26 AM TO AW 5/SD S/WELDS (ORD)
27 AF TO AV TO AW 1/SD S/WELD (ORD)
28 AN TO AX TO AP 4/SD S/WELDS (ORD)

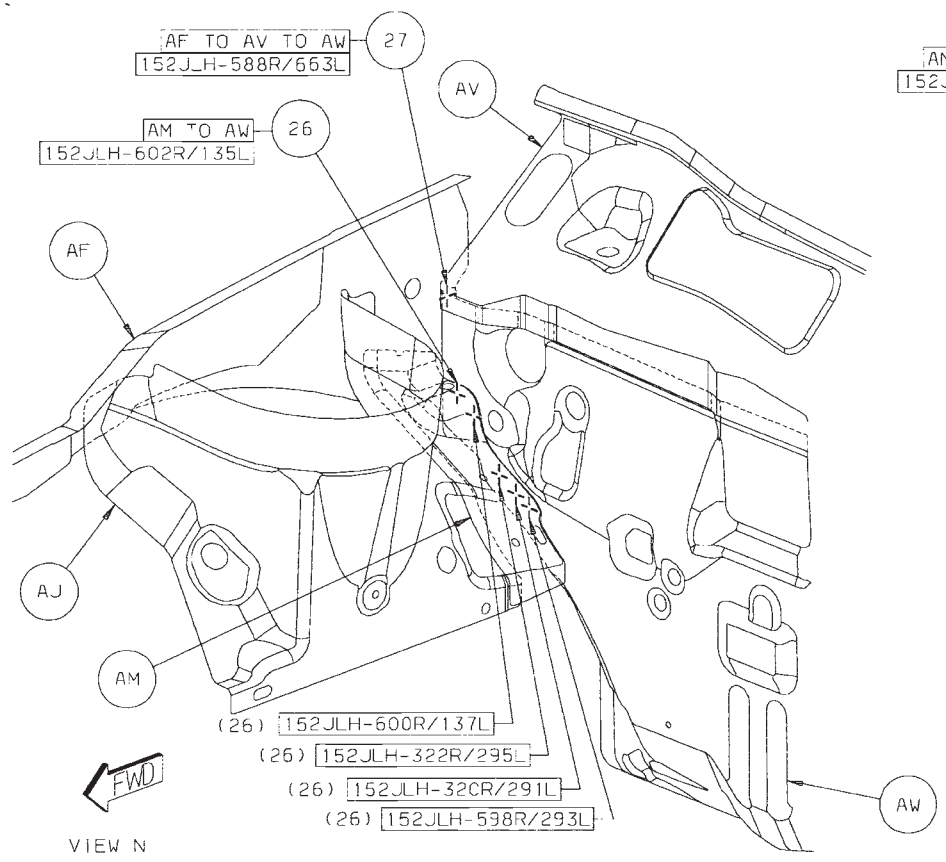

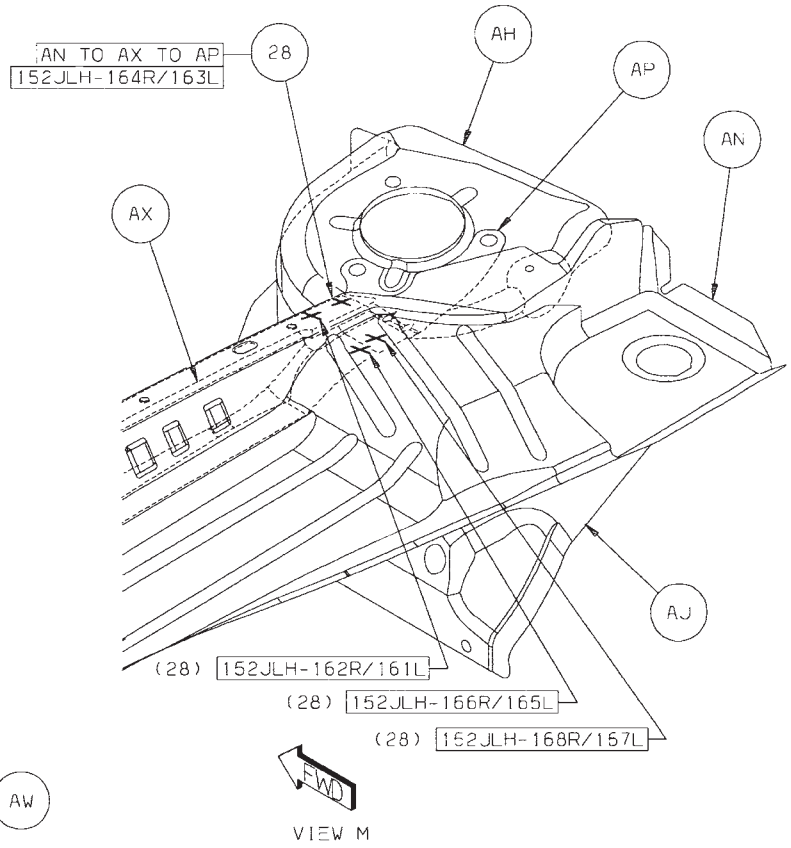

Back to Index

29 AZ TO AW TO AY 2R S/WELDS (ORD)
30 BA TO AW TO AC 1R S/WELD (ORD)
31 BA TO AW TO AY 2R S/WELDS (ORD)
32 BB TO AM TO AC 2/SD S/WELDS (ORD)
33 BB TO AC TO AJ 3/SD S/WELDS (ORD)
34 BB TO AY 4/SD S/WELDS (ORD)
35 BB TO AY TO AW 1/SD S/WELD (ORD)
36 BB TO AW 2/SD S/WELDS (ORD)

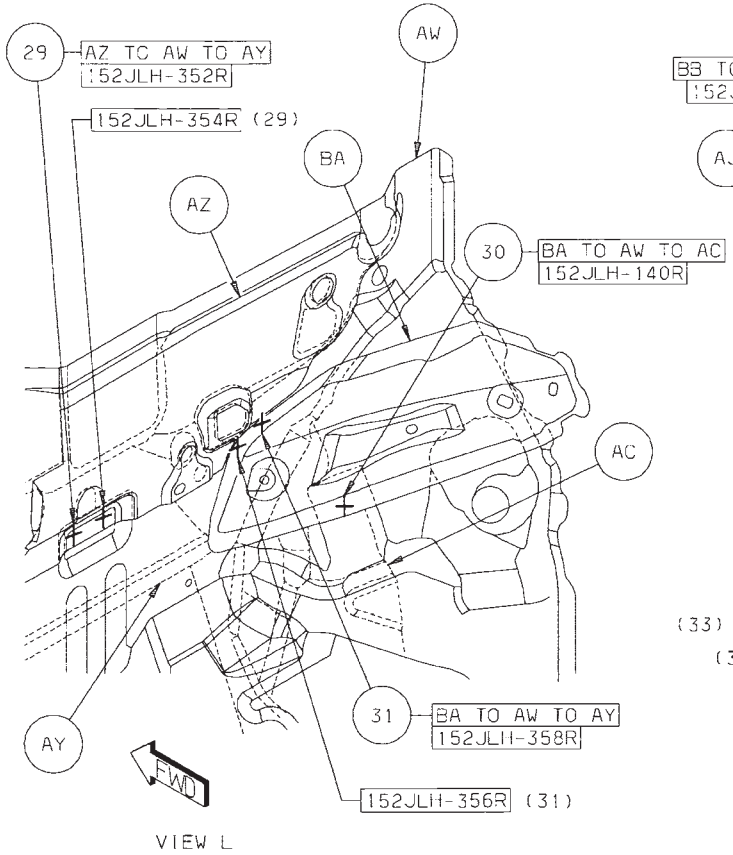

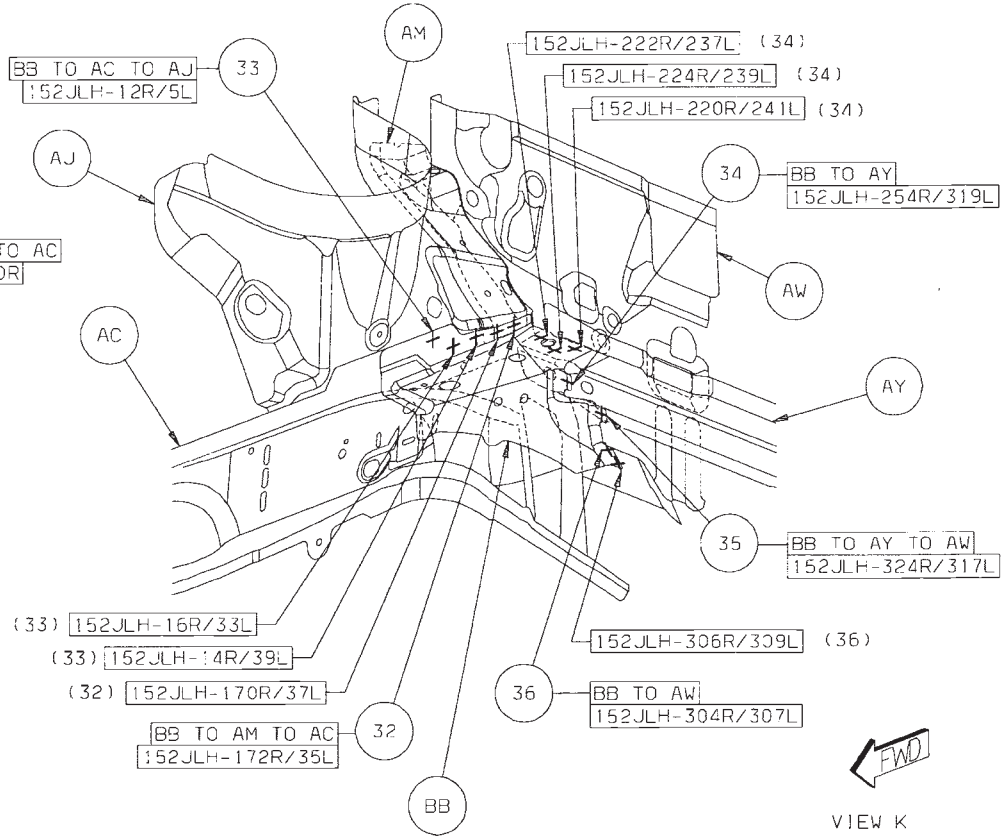

Back to Index

37 AY TO AW TO AZ 8 S/WELDS (ORD)
38 AY TO AW 10 S/WELDS (ORD)

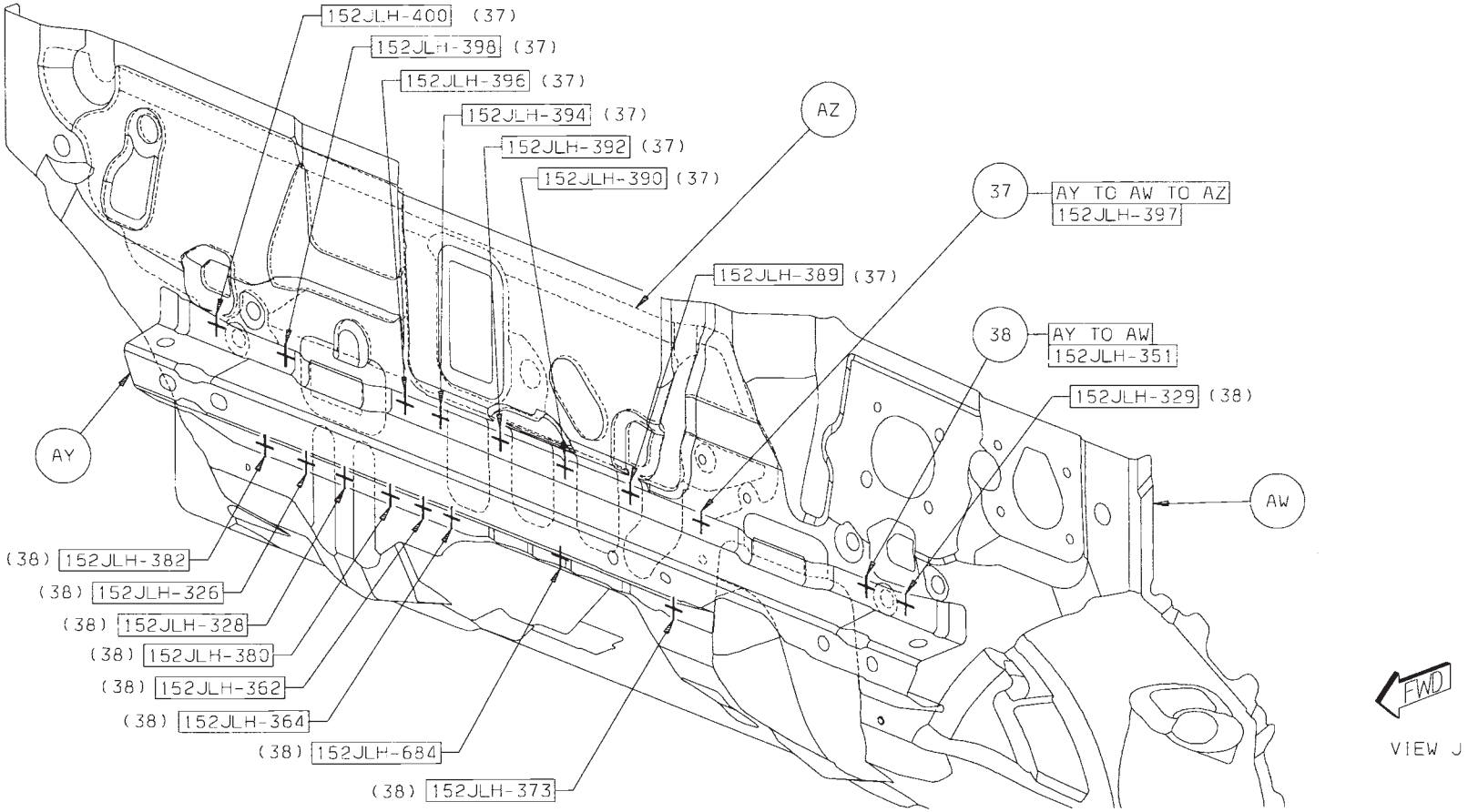

Back to Index

39 BF TO BC 6/SD S/WELDS (ORD)
40 AW TO BE TO BC 4/SD S/WELDS (ORD)
41 BD TO AW 3/SD S/WELDS (ORD)
42 BG TO BC 2/SD S/WELDS (ORD)

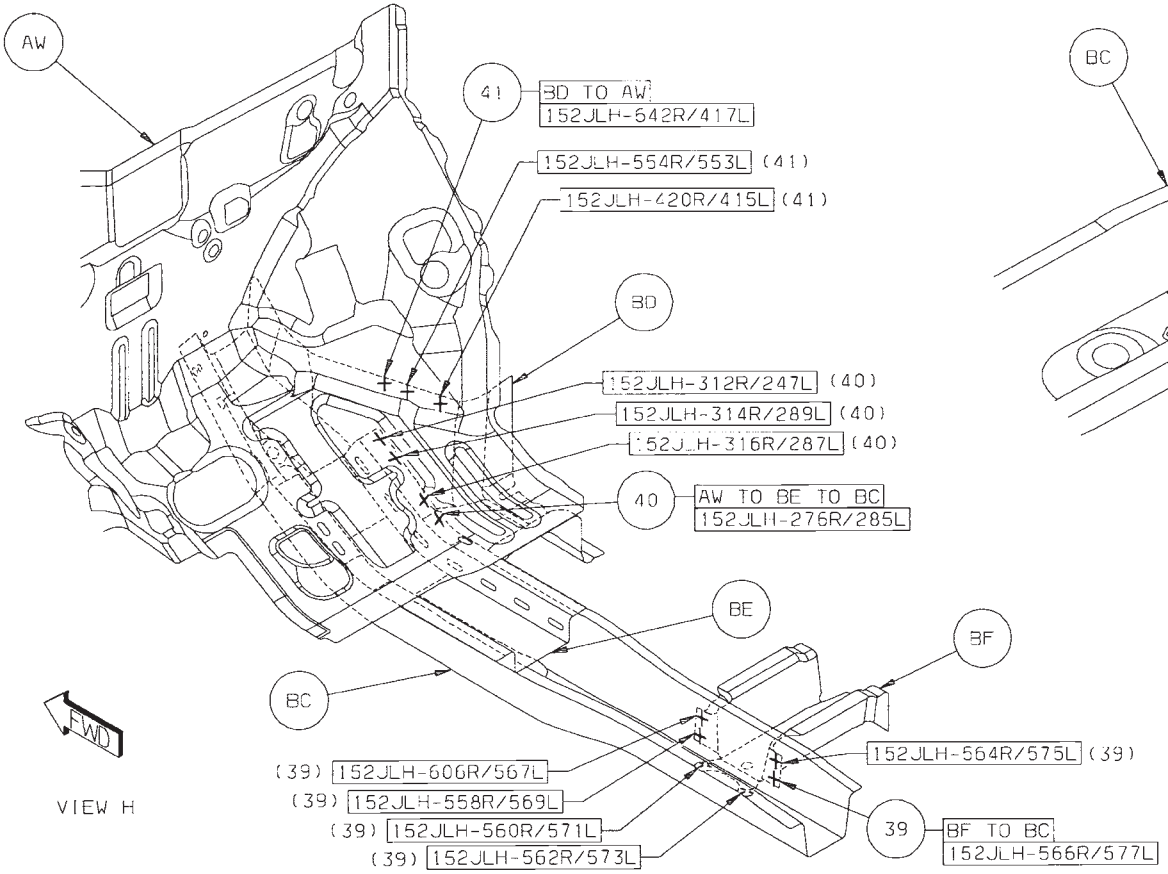

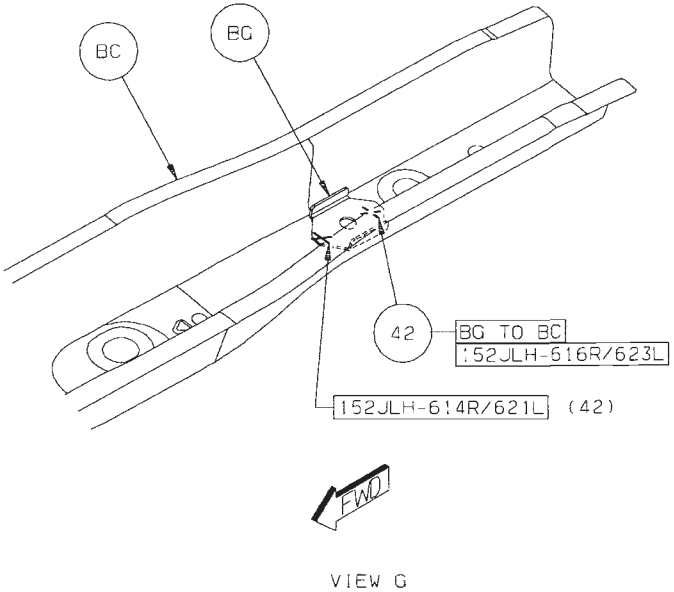

Back to Index

43 BH TO AW 2/SD S/WELDS (ORD)
44 BJ TO AW 3/SD S/WELDS (ORD)
45 AC TO AW 1/SD S/WELD (ORD)

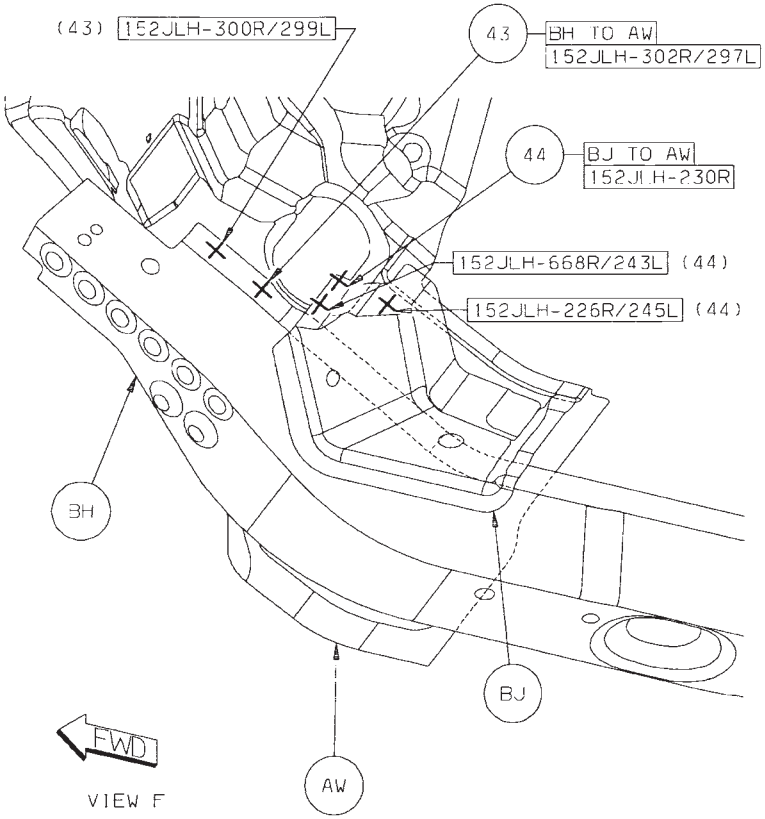

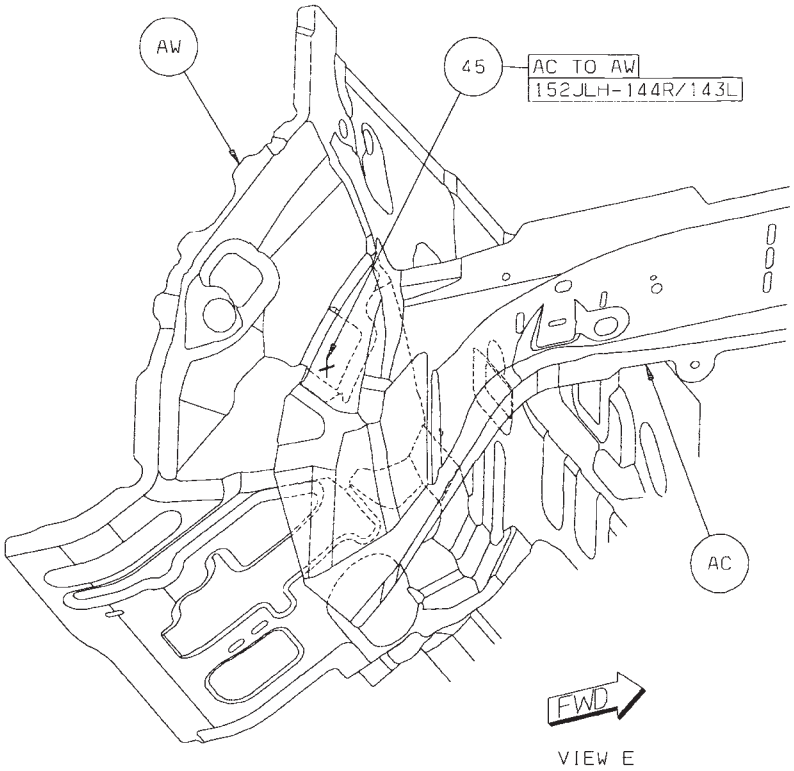

Back to Index

46 BJ TO BK TO AW 2R S/WELDS (ORD)
47 BJ TO AW 1R S/WELD (ORD)
48 BJ TO BL 3/SD S/WELDS (ORD)
49 BJ TO BL 2L S/WELDS (ORD)
50 BJ TO AW 1L S/WELD (ORD)
51 AW TO BL TO BJ 1L S/WELD (ORD)

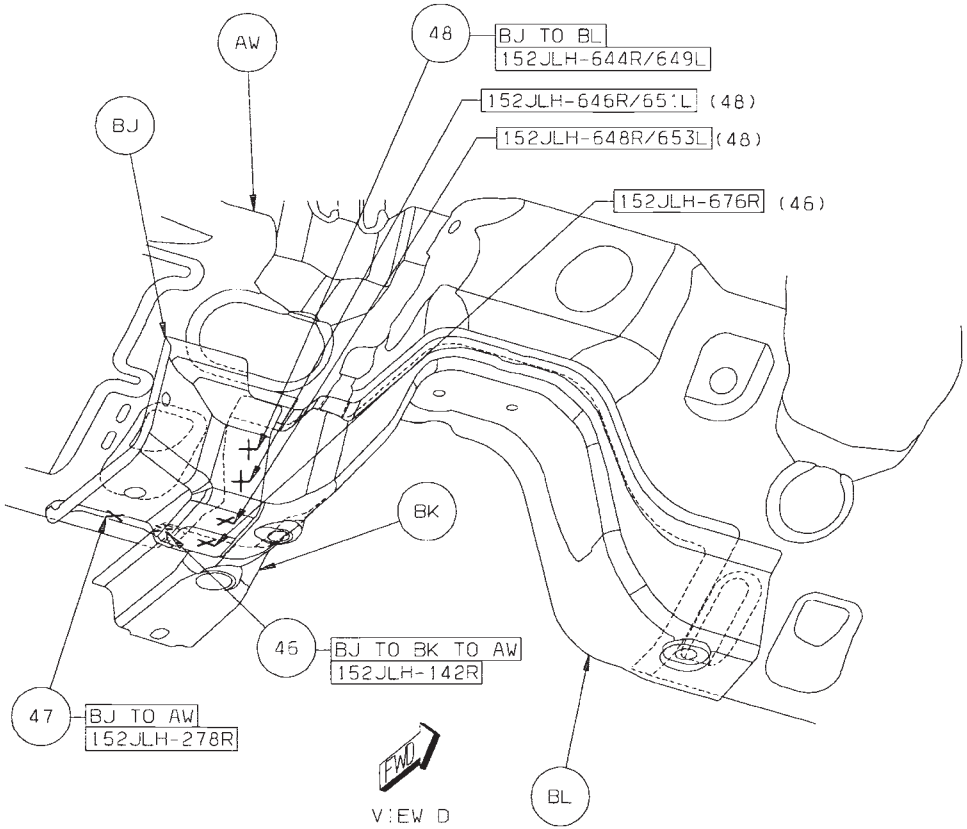

VIEW D

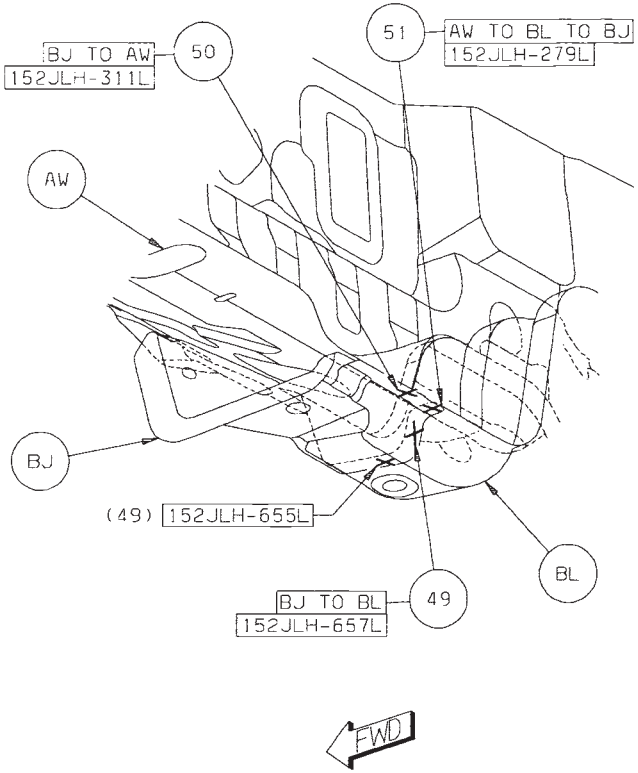

VIEW C

Back to Index

52 BL TO BM S/WELD (ORD)
53 BL TO BM TO AW 9 S/WELDS (ORD)
54 BK TO BL TO BM 2 S/WELDS (ORD)

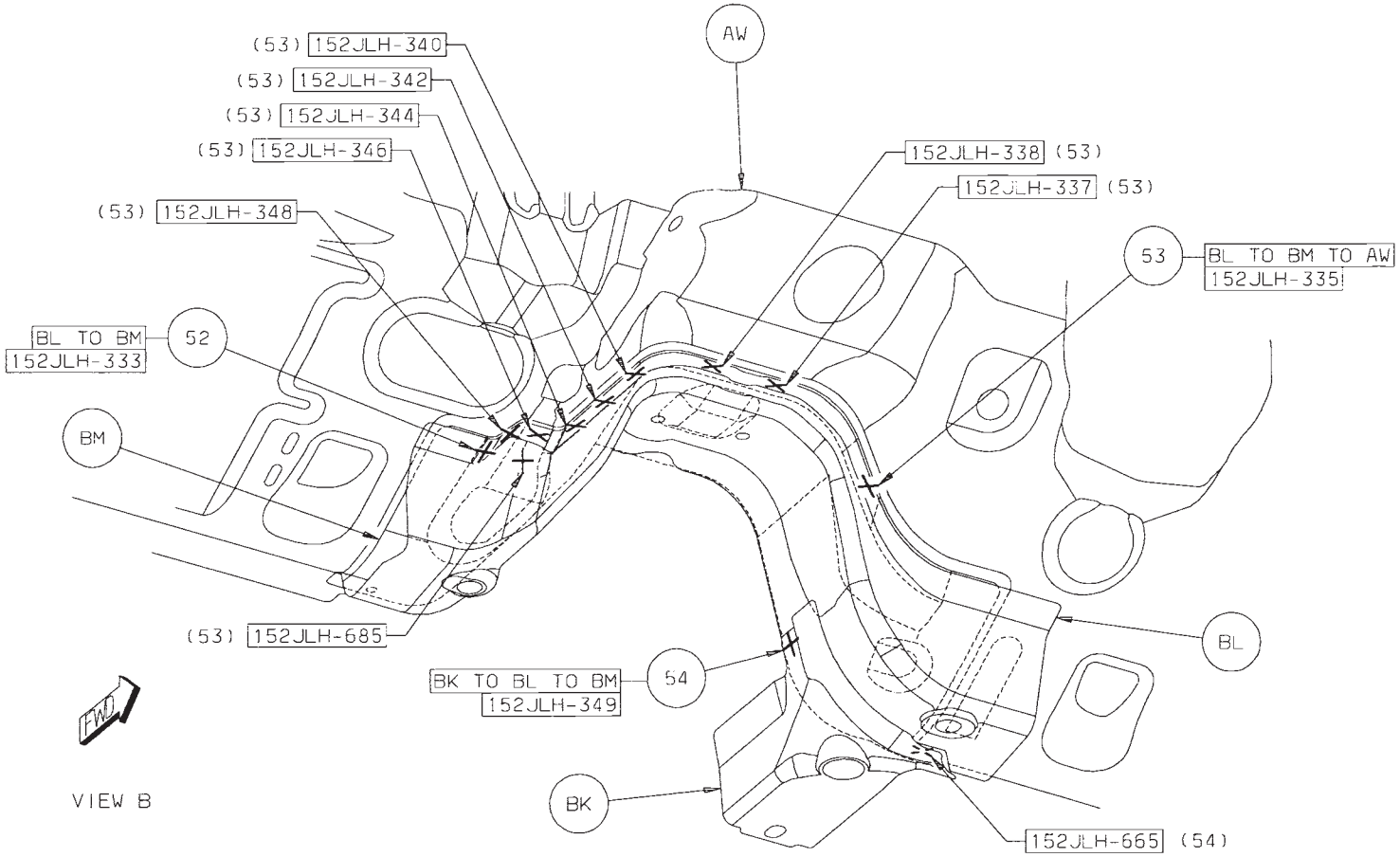

Back to Index

55 BM TO BL 2 S/WELDS (ORD)
56 BN TO AW TO AZ 6 S/WELDS (ORD)
57 BP TO AW TO AB 2 S/WELDS (ORD)
58 BP TO AW TO AZ 1 S/WELD (ORD)
59 BR TO AW TO AZ 4 S/WELDS (ORD)
60 BK TO BL TO BM 1 S/WELD (ORD)

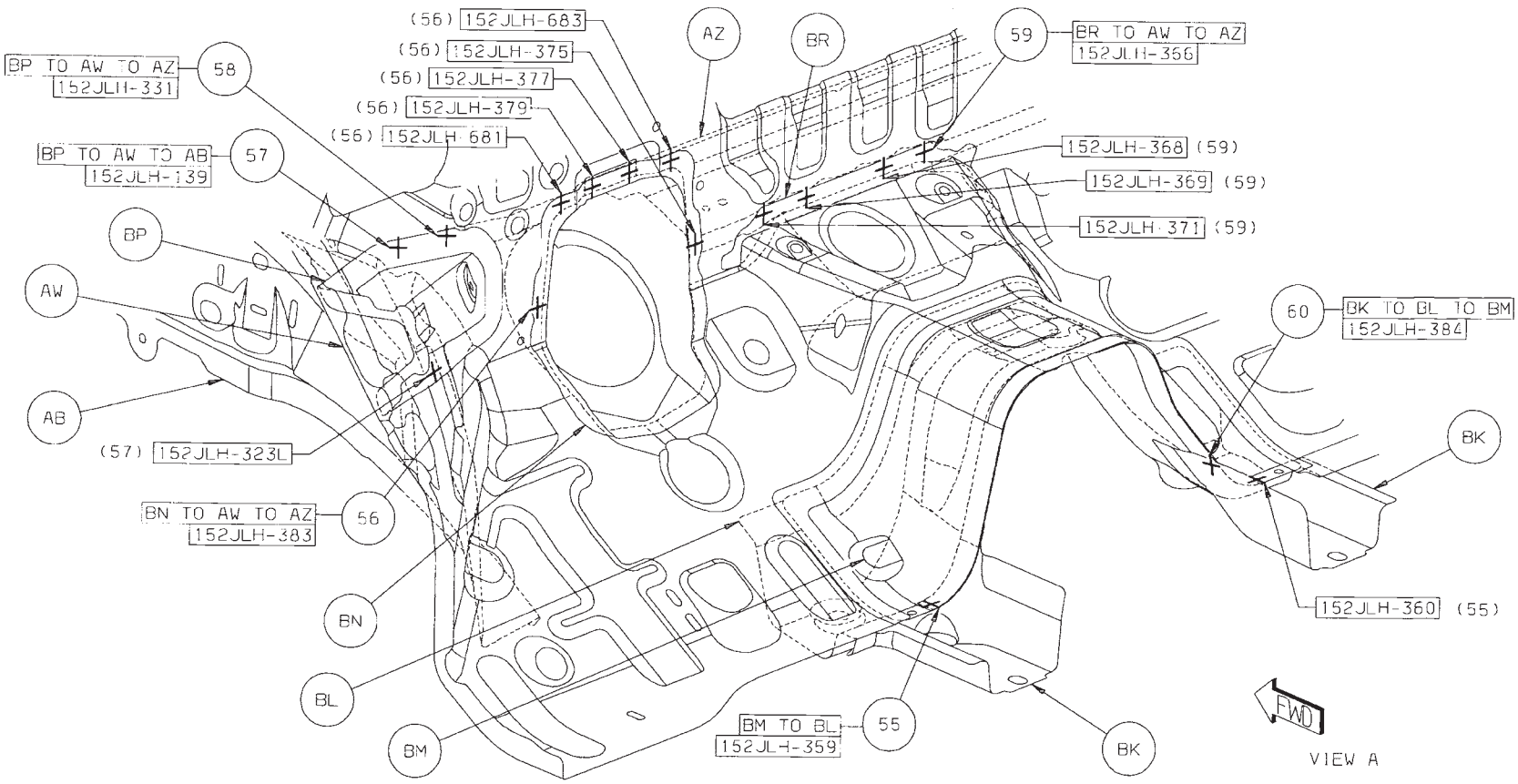

Back to Index

61 BS TO AY 2 PROJ WELDS (ORD)
62 BT TO AW 1/SD BEAD (ORD)

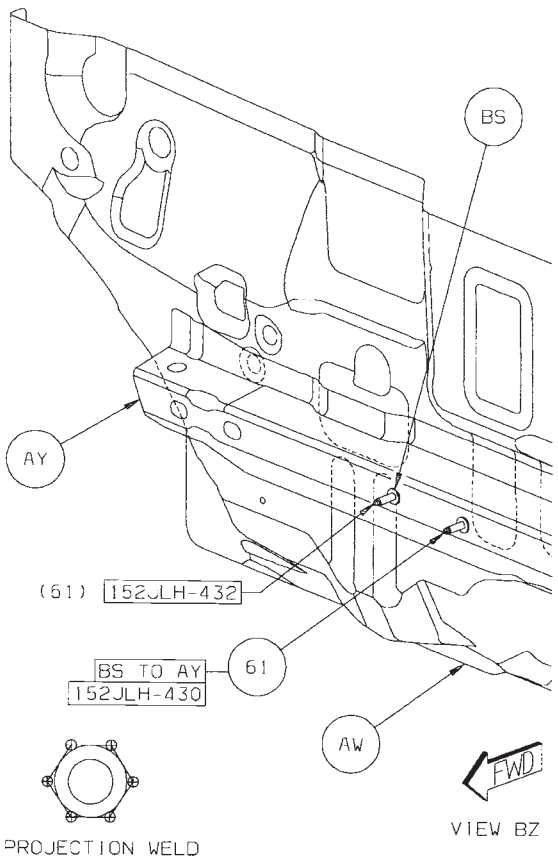

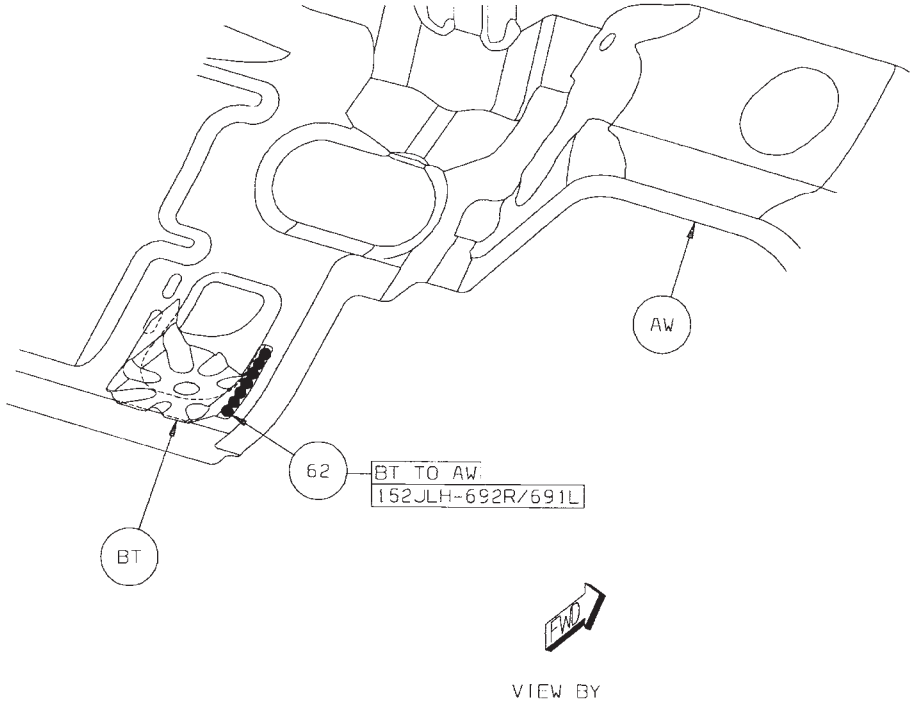

Back to Index

63 AP TO AX 1/SD GUM DROP (ORD)
64 AL TO AC 3 FCAW (ORD)

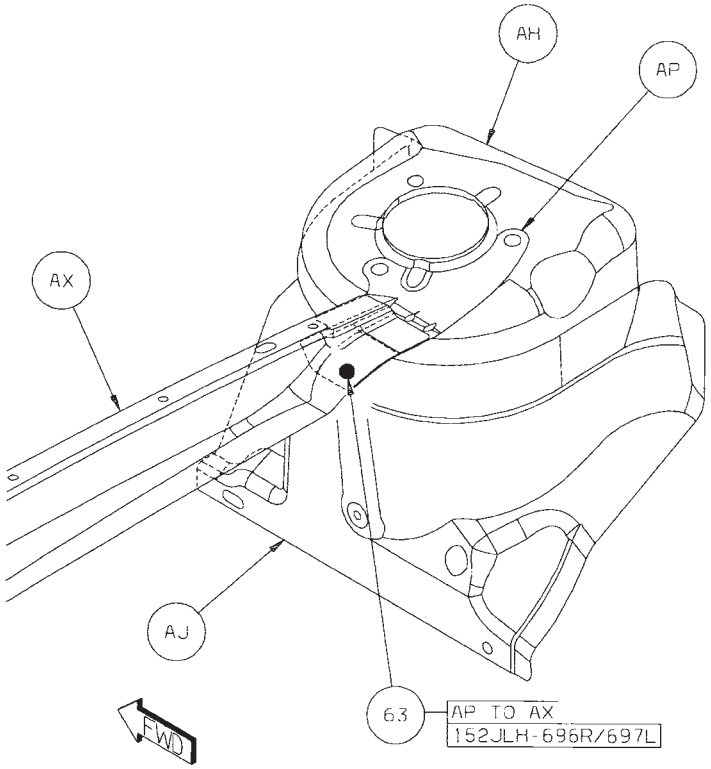

VIEW BX

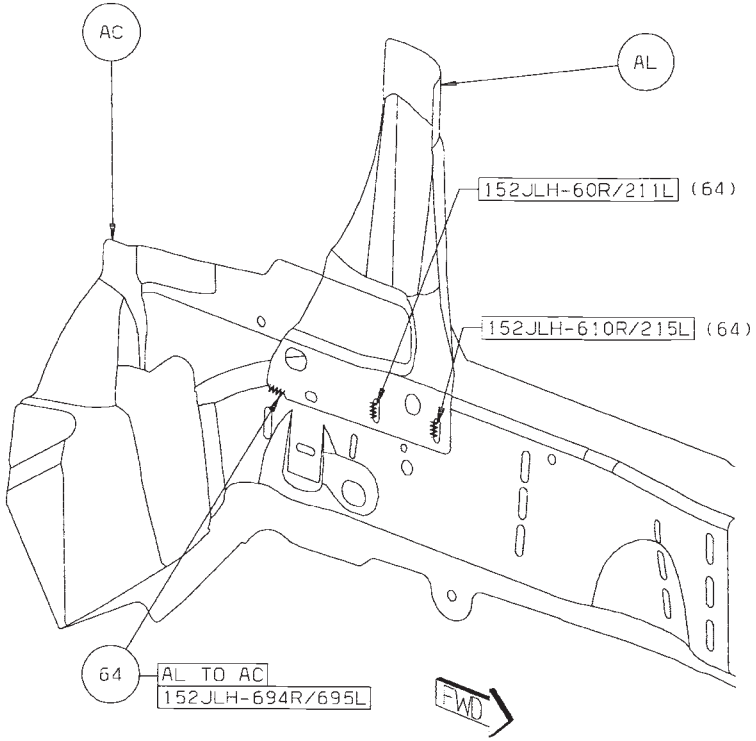

VIEW BW

Back to Index

65 AJ TO AD 1R FCAW (ORD)
66 AG TO AD 1R FCAW (ORD)
67 AG TO AC 1L FCAW (ORD)
68 AJ TO AC 1L FCAW (ORD)

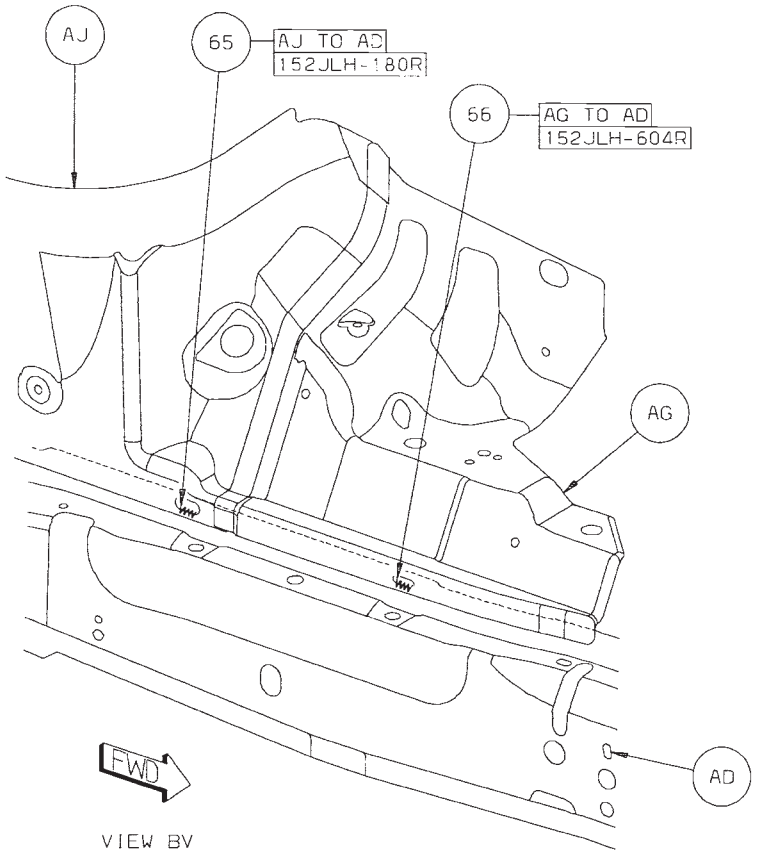

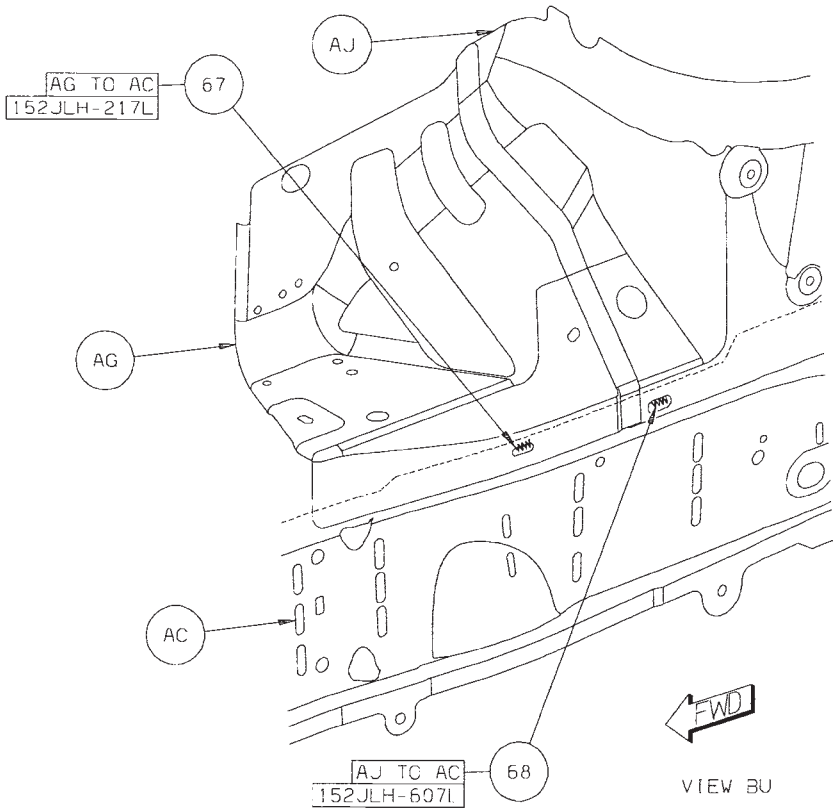

Back to Index

69 AW TO BE 2/SD FCAW (CRT)
70 AW TO BE 1/SD FCAW (ORD)

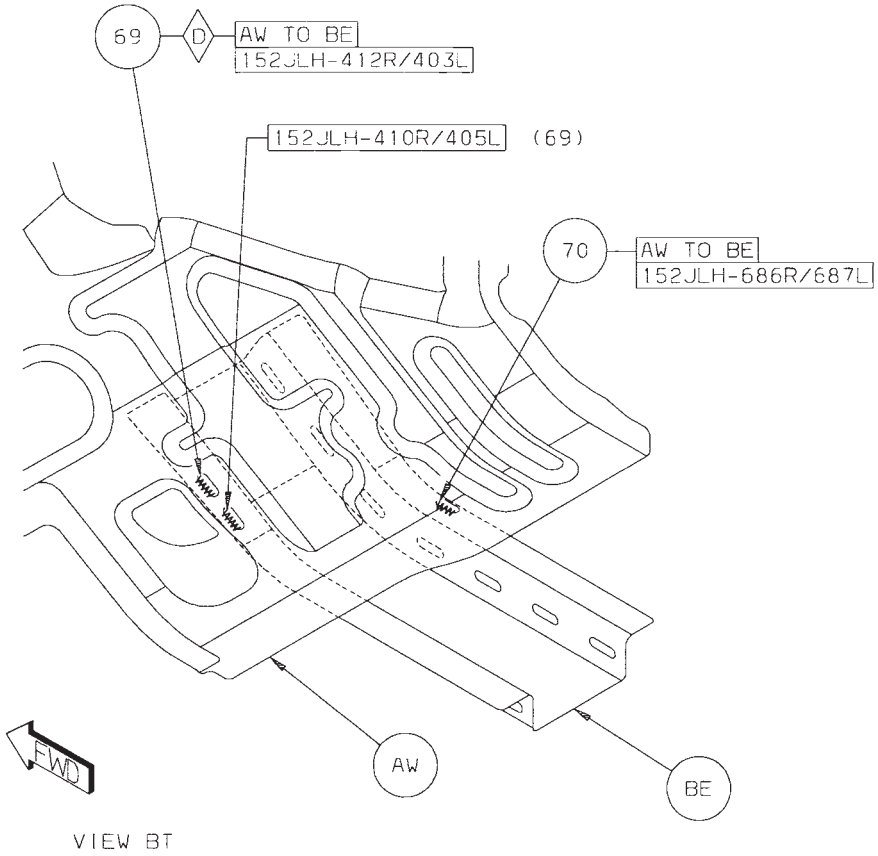

Back to Index

Explanation of Welding/Sealer Information

The major construction of a unibody vehicle consists of welded panels that create the supporting structure for all components and assemblies of the vehicle. Here are some examples for replacement of these parts.

Certain body components must use sealers to ensure proper assembly. Be sure to check the **Body Sealing Locations** and **Structural Adhesive Sections** for location and sealer type.

SEALER LEGEND

- Thumbgrade Sealer
- Pumpable Sealer
- ZZZZ Hidden Sealer
- Non Structural Expand Foam

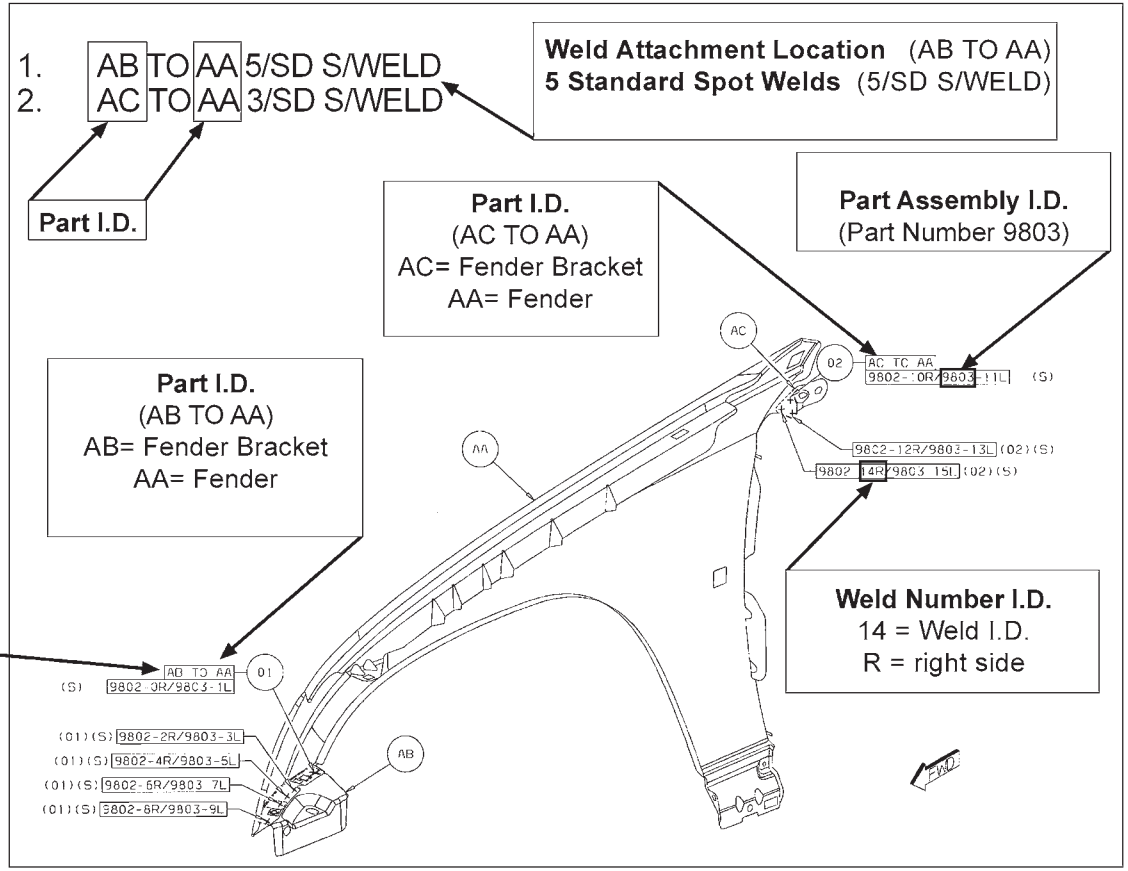

The welded components are indicated by using the designations given in the illustration below: For example, "AB to AA" indicates that component "AB" and component "AA" shown in this illustration are welded together.

Back to Index

Explanation of Welding Abbreviations

Definitions

Weld Type

(ORD)=Ordinary Weld or Standard
(CRT)=Critical Weld or Diamond
(SAF)=Safety Weld
PROJ=Projection Weld
FCAW=Flex Core Arc Weld
MFG=Manufacturing Weld
S/WELD=Spot Welds
/SD=Per Side

Examples

AA TO AB 5/SD S/WELDS (ORD)=
PART AA WELDED TO PART AB 5 PER SIDE (5 RIGHT/5 LEFT) SPOT WELDS STANDARD

AA TO AB 12 PROJ WELDS (CRT)=
PART AA WELDED TO PART AB 12 PROJECTION WELDS CRITICAL OR DIAMOND

Adhesives

STRUCT ADH (ORD) = Ordinary Structural Adhesive
ADH (ORD) = Ordinary Adhesive

Back to Index

Explanation of Welding/Sealer Information

The major construction of a unibody vehicle consists of welded panels that create the supporting structure for all components and assemblies of the vehicle. Here are some examples for replacement of these parts.

Certain body components must use sealers to ensure proper assembly. Be sure to check the **Body Sealing Locations** and **Structural Adhesive Sections** for location and sealer type.

SEALER LEGEND

- Thumbgrade Sealer
- Pumpable Sealer
- Hidden Sealer
- Non Structural Expand Foam

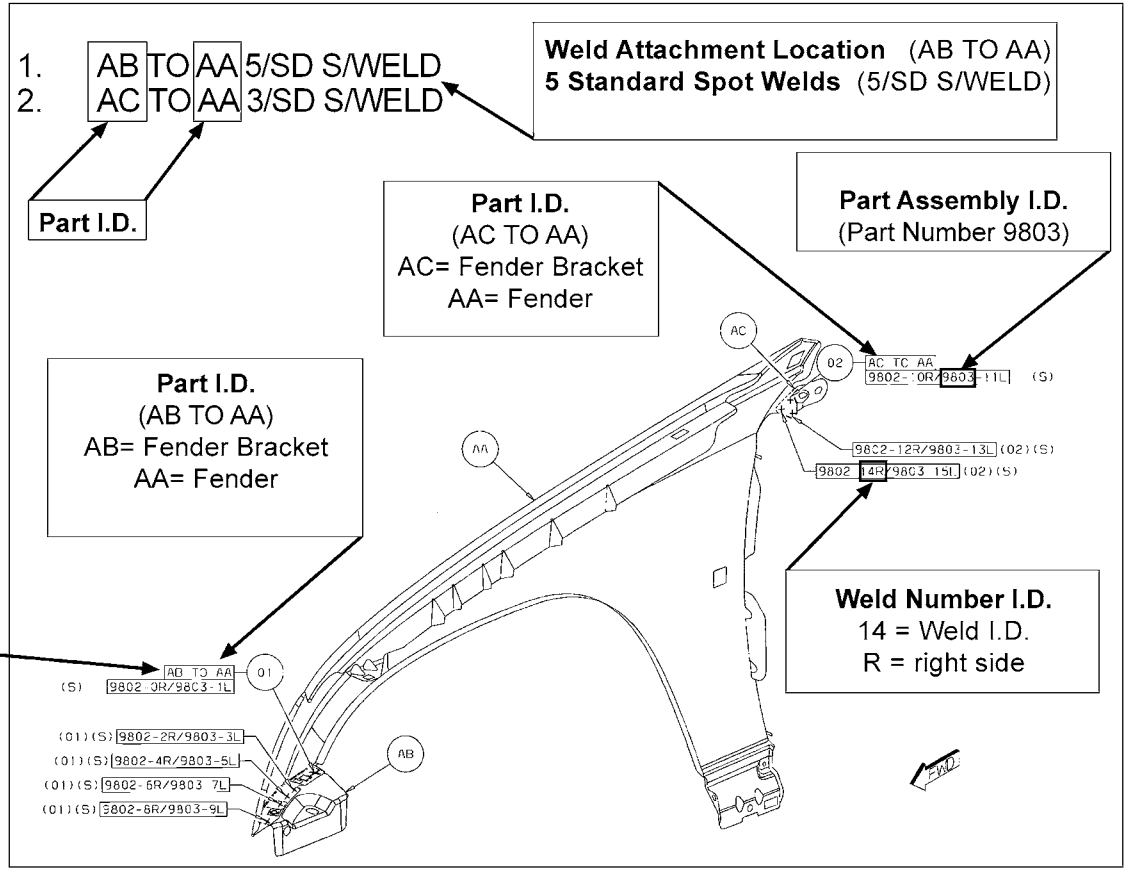

The welded components are indicated by using the designations given in the illustration below: For example, “AB to AA” indicates that component “AB” and component “AA” shown in this illustration are welded together.

Back to Index

Explanation of Welding Abbreviations

Definitions

Weld Type

(ORD)=Ordinary Weld or Standard
(CRT)=Critical Weld or Diamond
(SAF)=Safety Weld
PROJ=Projection Weld
FCAW=Flex Core Arc Weld
MFG=Manufacturing Weld
S/WELD=Spot Welds
/SD=Per Side

Examples

AA TO AB 5/SD S/WELDS (ORD)=
PART AA WELDED TO PART AB 5 PER SIDE (5 RIGHT/5 LEFT) SPOT WELDS STANDARD

AA TO AB 12 PROJ WELDS (CRT)=
PART AA WELDED TO PART AB 12 PROJECTION WELDS CRITICAL OR DIAMOND

Adhesives

STRUCT ADH (ORD) = Ordinary Structural Adhesive
ADH (ORD) = Ordinary Adhesive

Back to Index

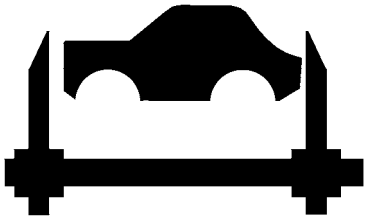

CHRYSLER SEBRING
DODGE AVENGER
FRAME/BODY DIMENSIONS

Back to Index

FRAME DIMENSIONS – CHRYSLER SEBRING/DODGE AVENGER

Frame dimensions are listed in metric scale. All dimensions are from center of Principal Locating Point (PLP), or from center to center of PLP and transfer location. Vertical dimensions can be taken from the work surface to the locations indicated.

INDEX

Back to Index

FRAME/BODY DIMENSIONS

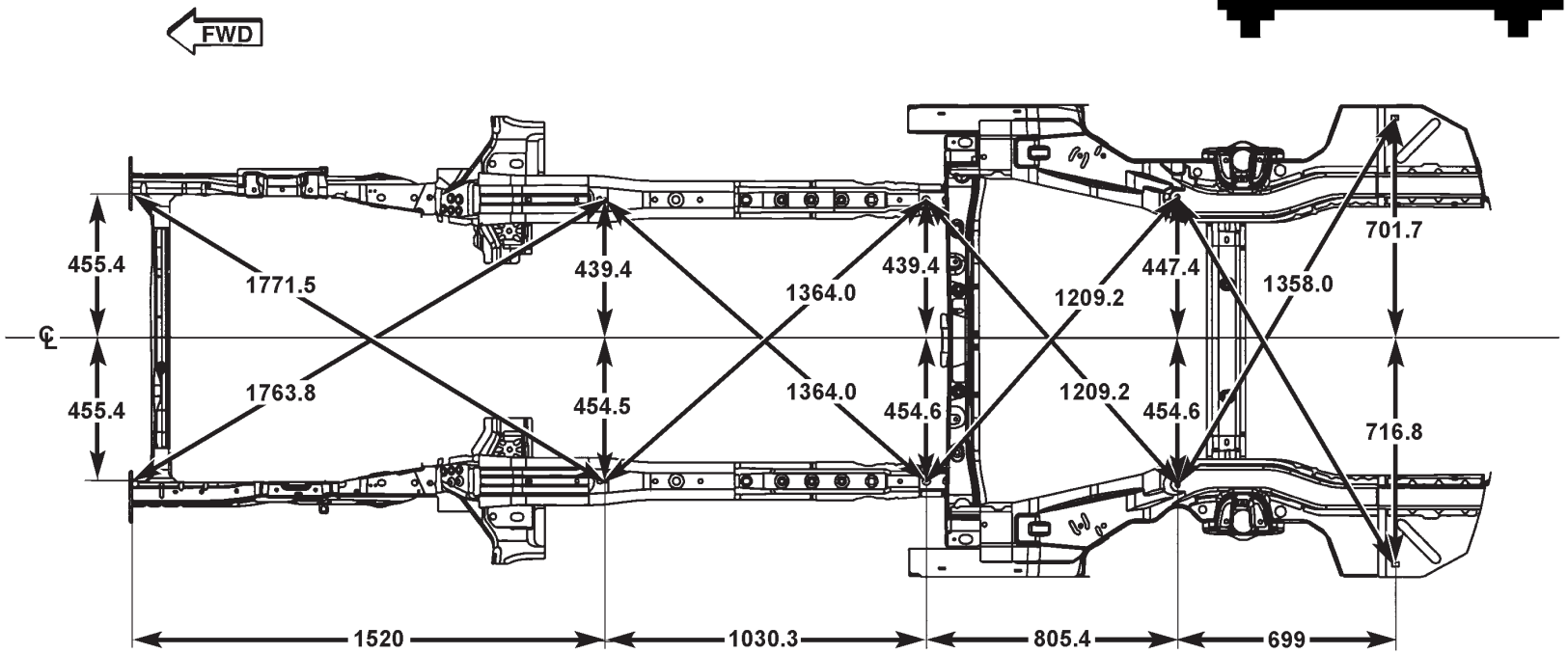

ALL DIMENSIONS ARE IN MILLIMETERS

81a8a9a3

Figure 1. PLAN VIEW

Back to Index

FRAME/BODY DIMENSIONS

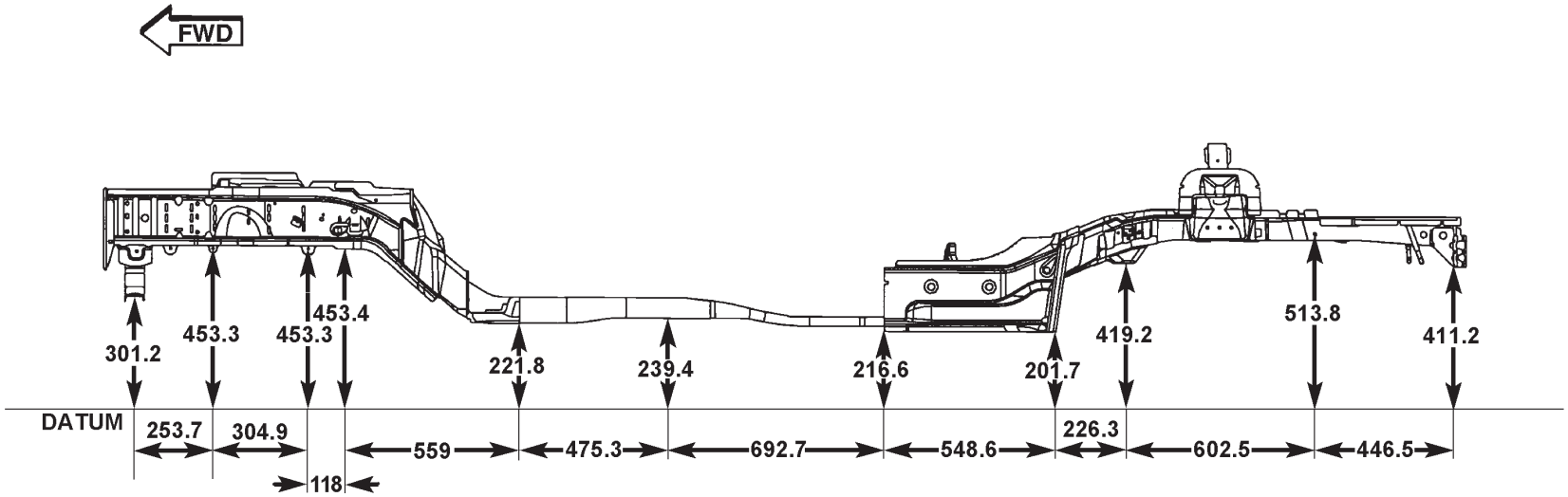

NOTE: P215/55R18 BSW TIRE USED FOR DATUM PLANE

ALL DIMENSIONS ARE IN MILLIMETERS

81a8a9a8

Figure 2. SIDE VIEW

Back to Index

CHRYSLER SEBRING
OPENING DIMENSIONS

DESCRIPTION	FIGURE
ENGINE BOX OPENING	1
WINDSHIELD OPENING	2
FRONT DOOR OPENING	3
REAR DOOR OPENING	4
REAR WINDOW OPENING	5
DECKLID OPENING	6

Back to Index

CHRYSLER SEBRING
FRAME/BODY DIMENSIONS

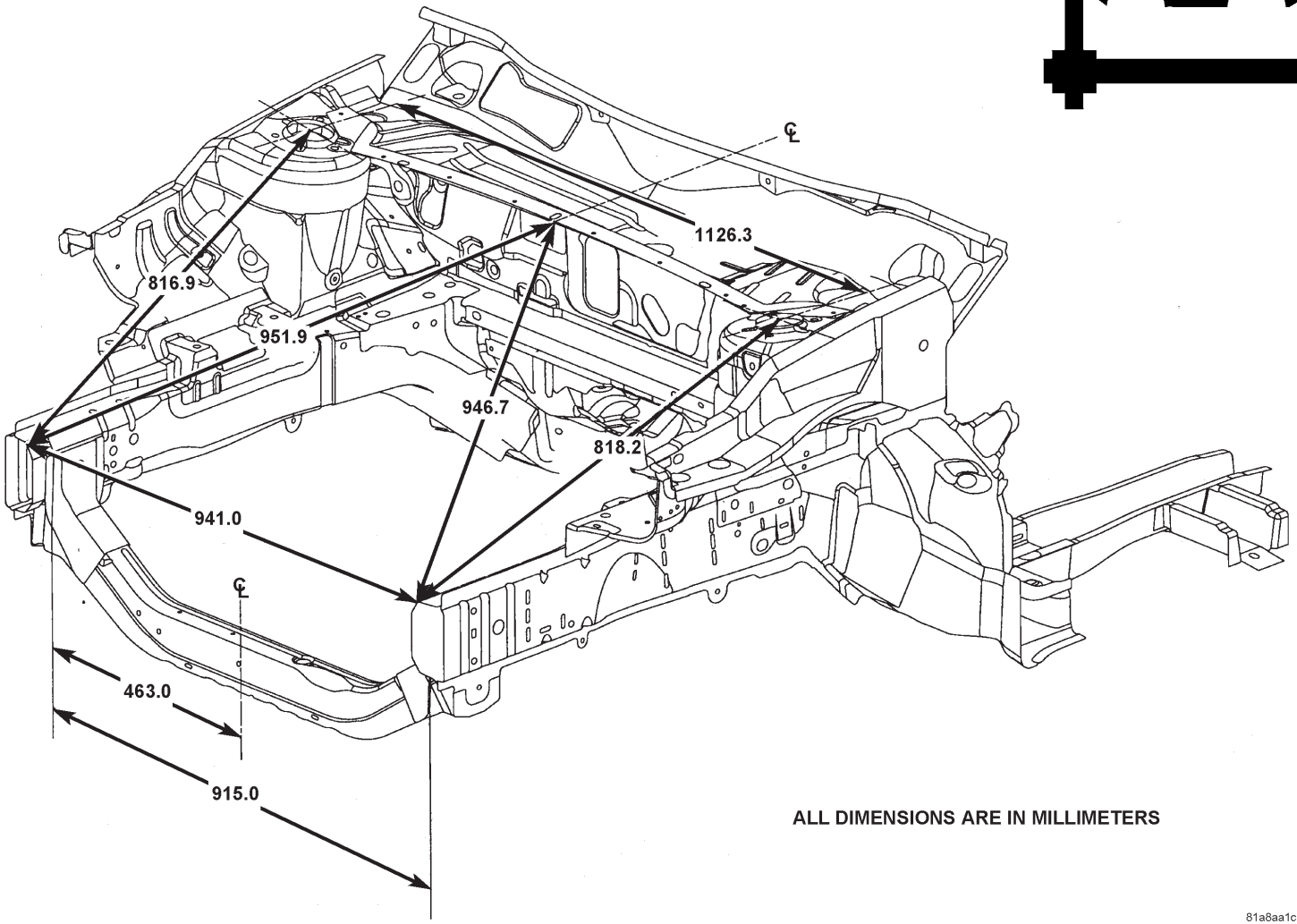

ALL DIMENSIONS ARE IN MILLIMETERS

81a8aa1c

Figure 1. ENGINE BOX OPENING

Back to Index

CHRYSLER SEBRING
FRAME/BODY DIMENSIONS

ALL DIMENSIONS ARE IN MILLIMETERS

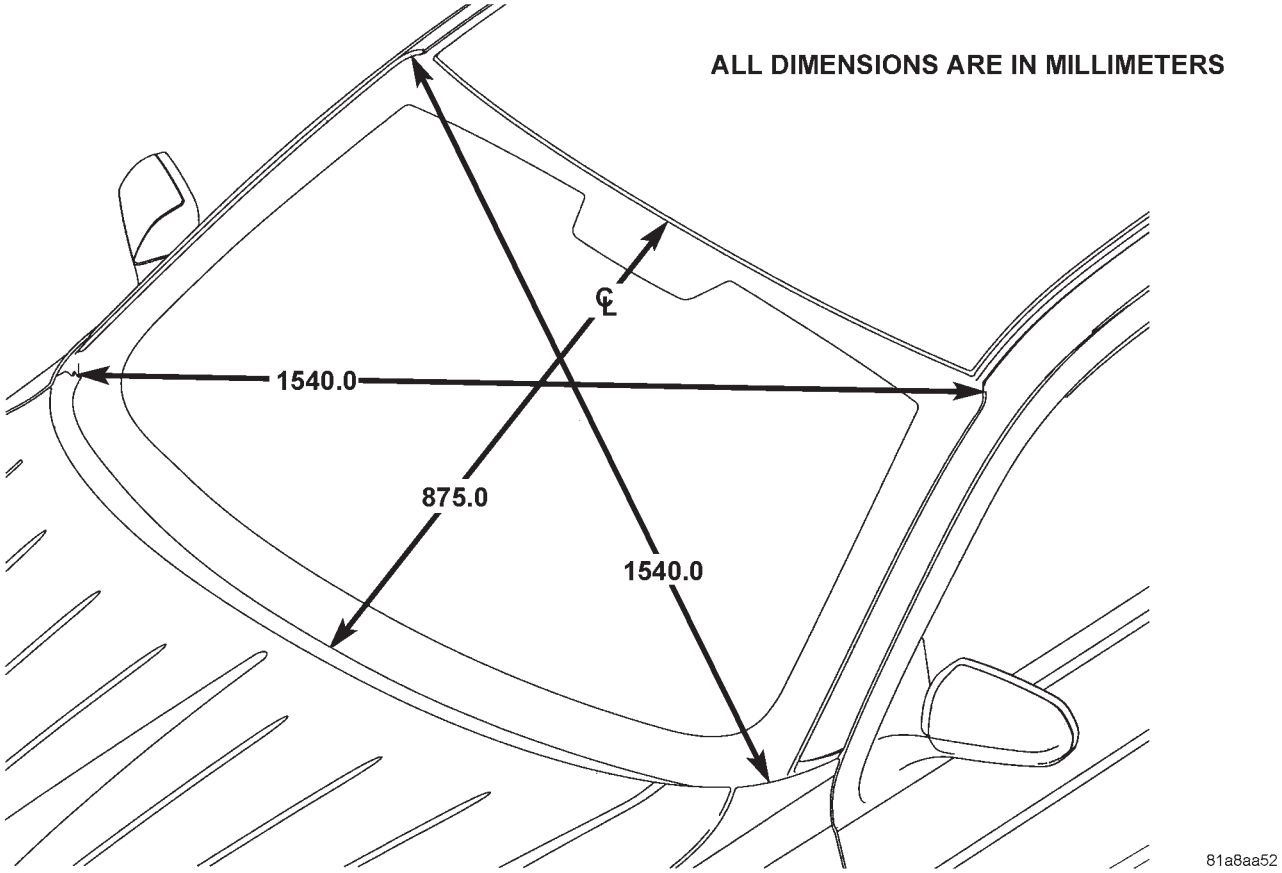

Figure 2. WINDSHIELD OPENING

Back to Index

CHRYSLER SEBRING
FRAME/BODY DIMENSIONS

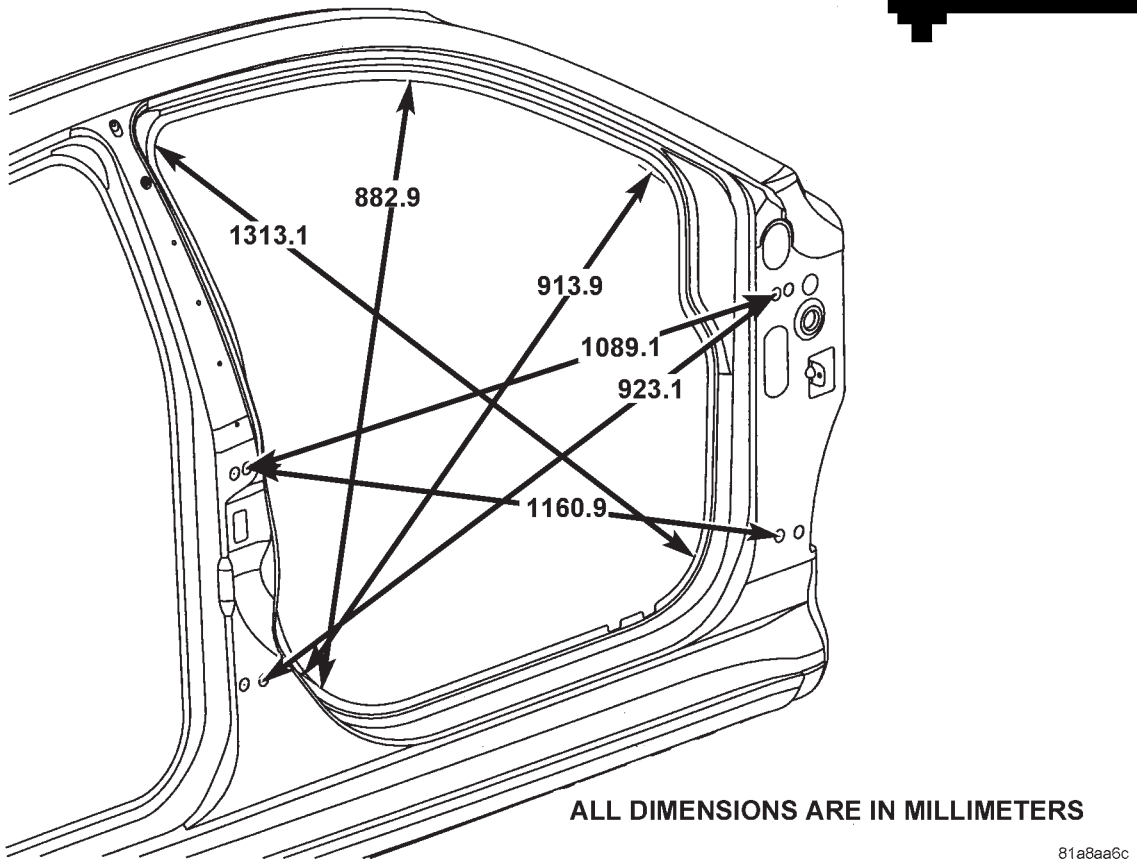

Figure 3. FRONT DOOR OPENING

Back to Index

CHRYSLER SEBRING
FRAME/BODY DIMENSIONS

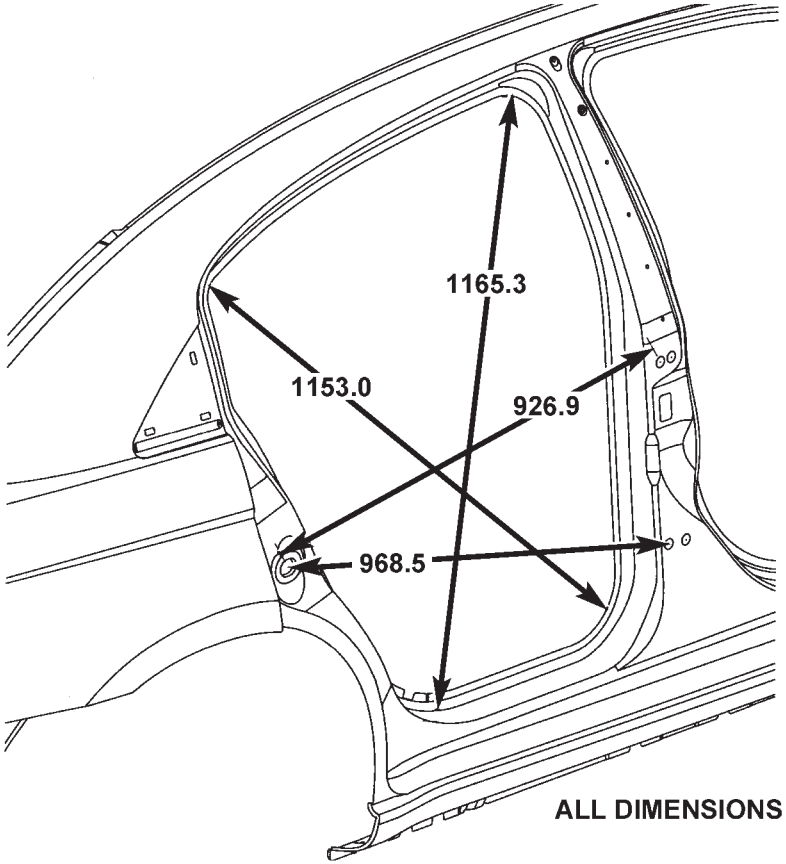

ALL DIMENSIONS ARE IN MILLIMETERS

81a8aa70

Figure 4. REAR DOOR OPENING

Back to Index

CHRYSLER SEBRING
FRAME/BODY DIMENSIONS

ALL DIMENSIONS ARE
IN MILLIMETERS

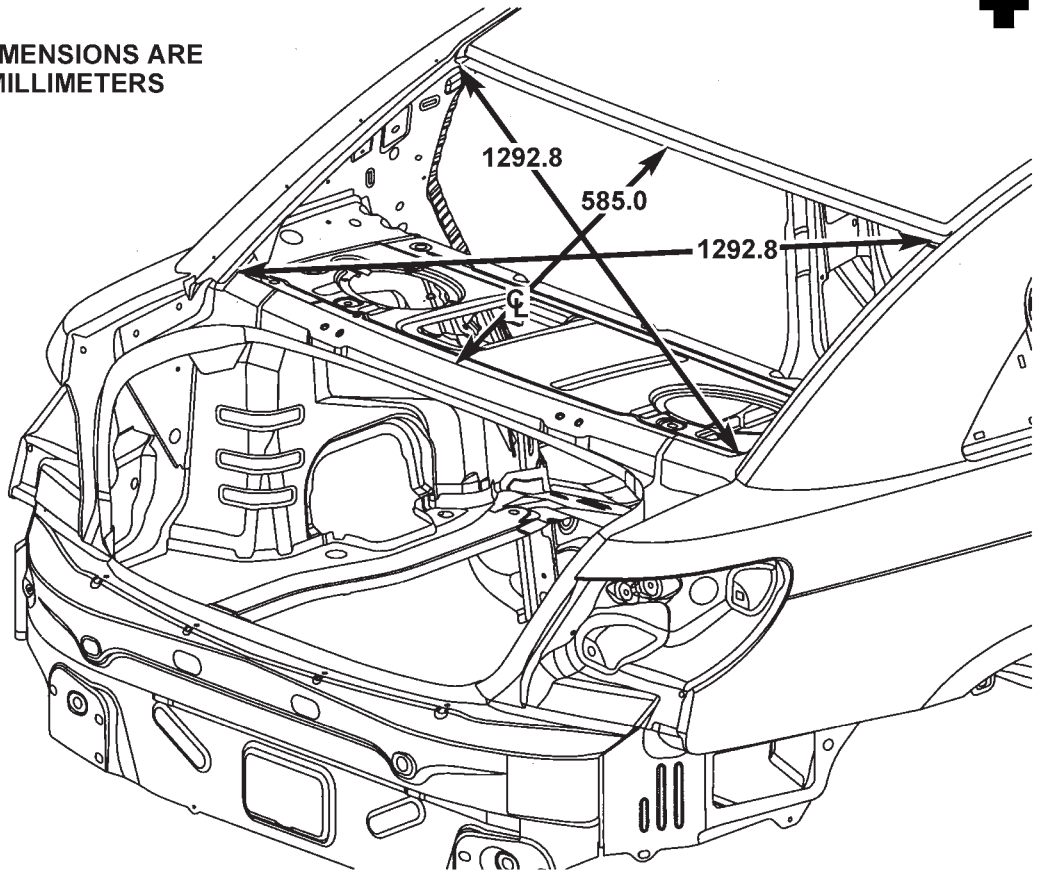

81a8aa77

Figure 5. REAR WINDOW OPENING

Back to Index

CHRYSLER SEBRING
FRAME/BODY DIMENSIONS

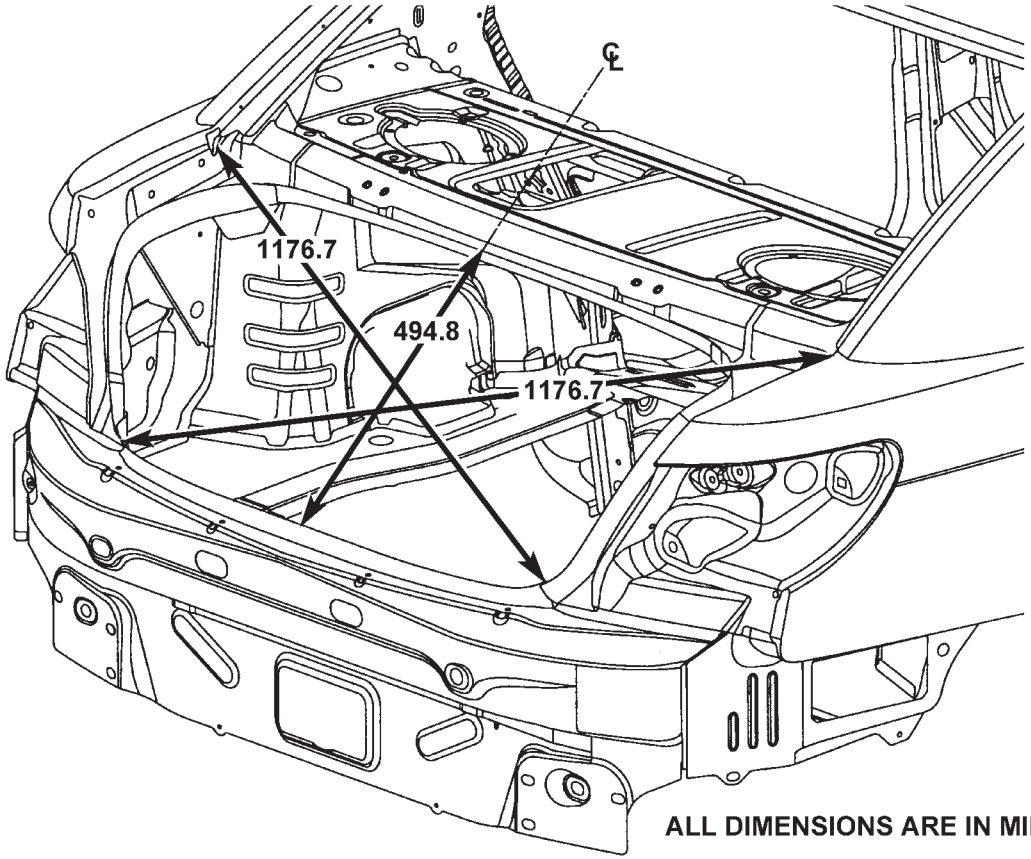

ALL DIMENSIONS ARE IN MILLIMETERS

81a8aa7e

Figure 6. DECKLID OPENING

Back to Index

DODGE AVENGER
OPENING DIMENSIONS

DESCRIPTION	FIGURE
ENGINE BOX OPENING	1
WINDSHIELD OPENING	2
FRONT DOOR OPENING	3
REAR DOOR OPENING	4
REAR WINDOW OPENING	5
DECKLID OPENING	6

Back to Index

DODGE AVENGER
FRAME/BODY DIMENSIONS

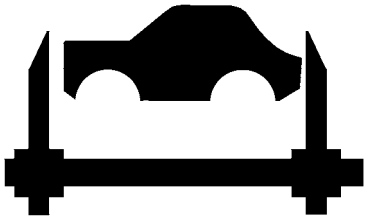

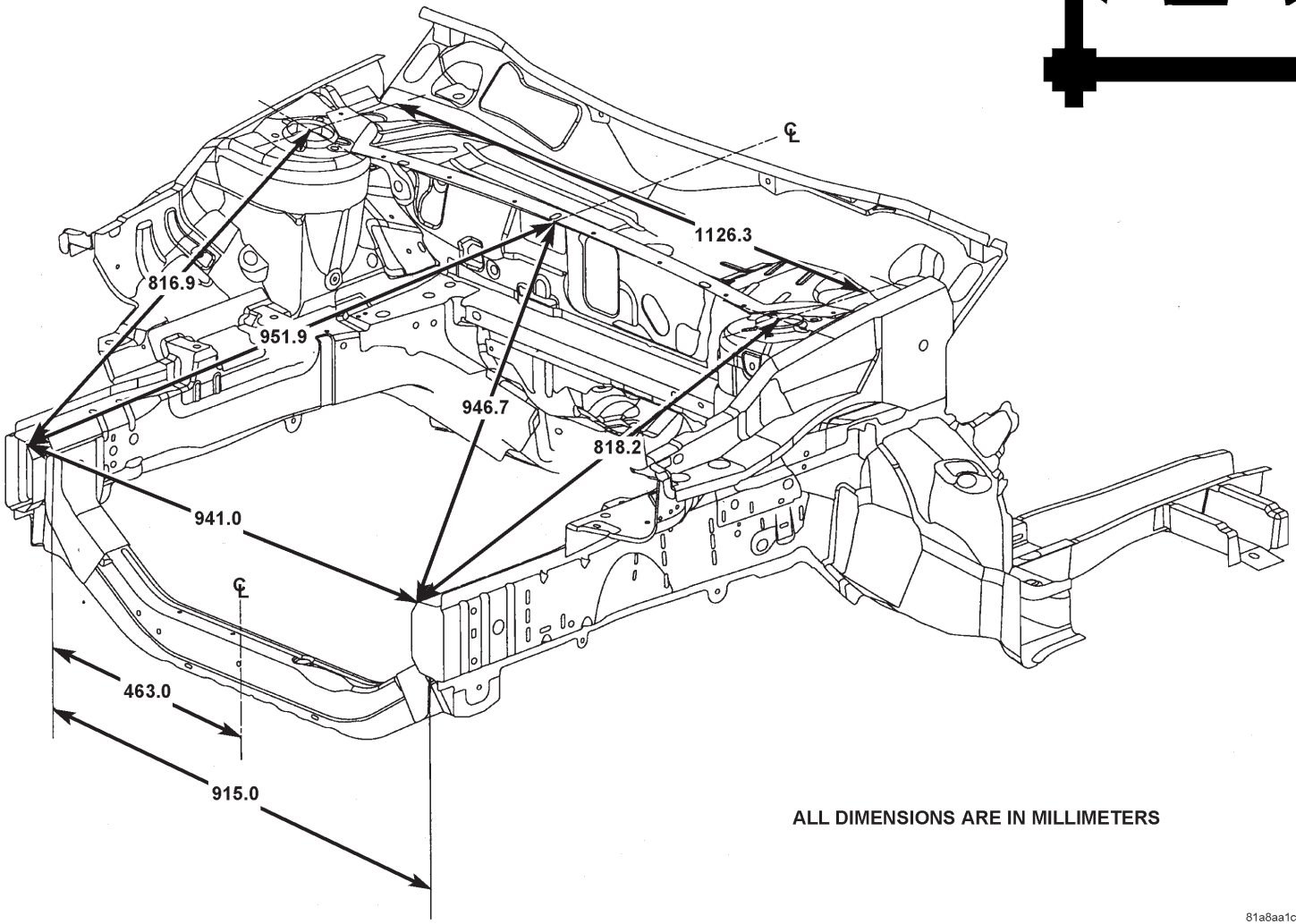

ALL DIMENSIONS ARE IN MILLIMETERS

81a8aa1c

Figure 1. ENGINE BOX OPENING

Back to Index

DODGE AVENGER
FRAME/BODY DIMENSIONS

ALL DIMENSIONS ARE IN MILLIMETERS

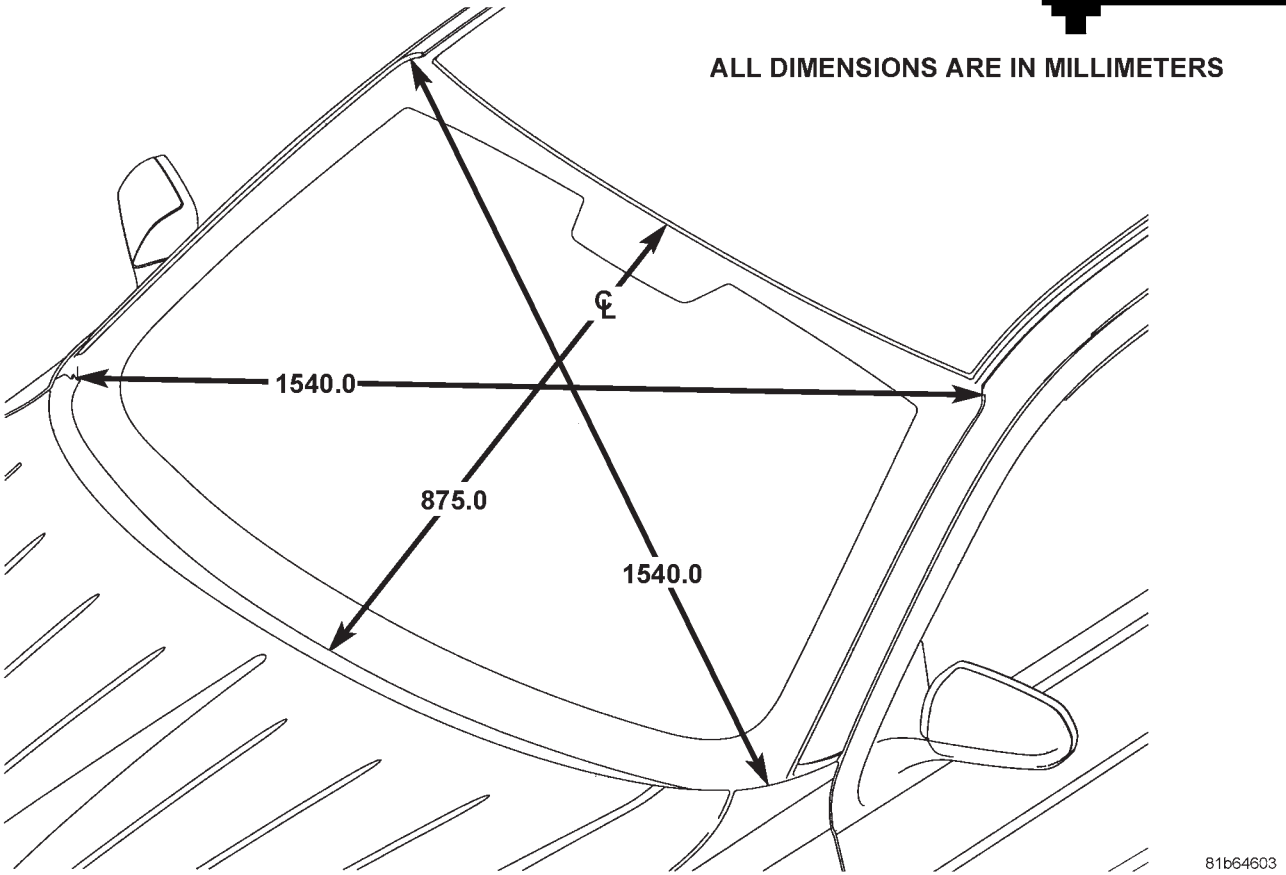

Figure 2. WINDSHIELD OPENING

Back to Index

DODGE AVENGER
FRAME/BODY DIMENSIONS

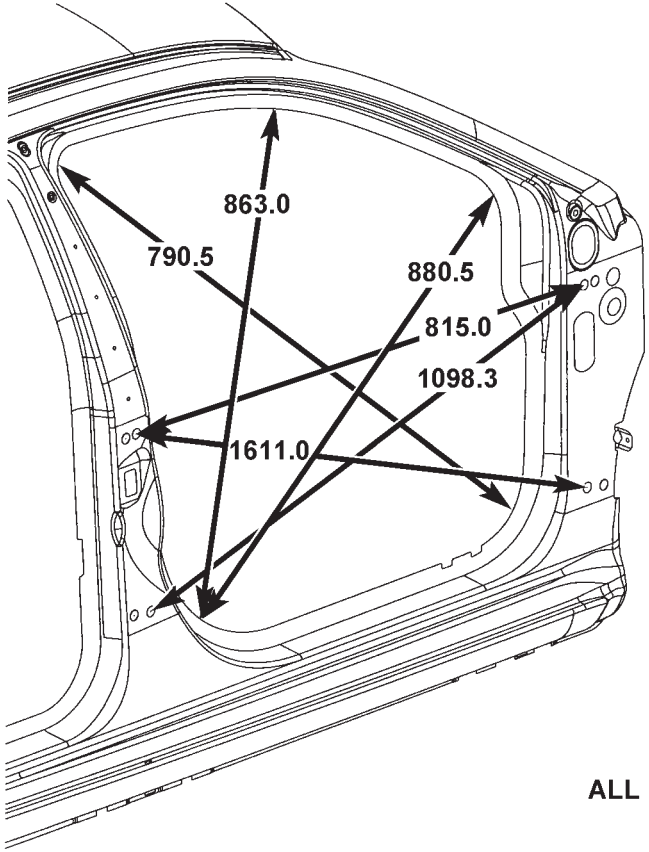

ALL DIMENSIONS ARE IN MILLIMETERS

81b645f2

Figure 3. FRONT DOOR OPENING

Back to Index

DODGE AVENGER
FRAME/BODY DIMENSIONS

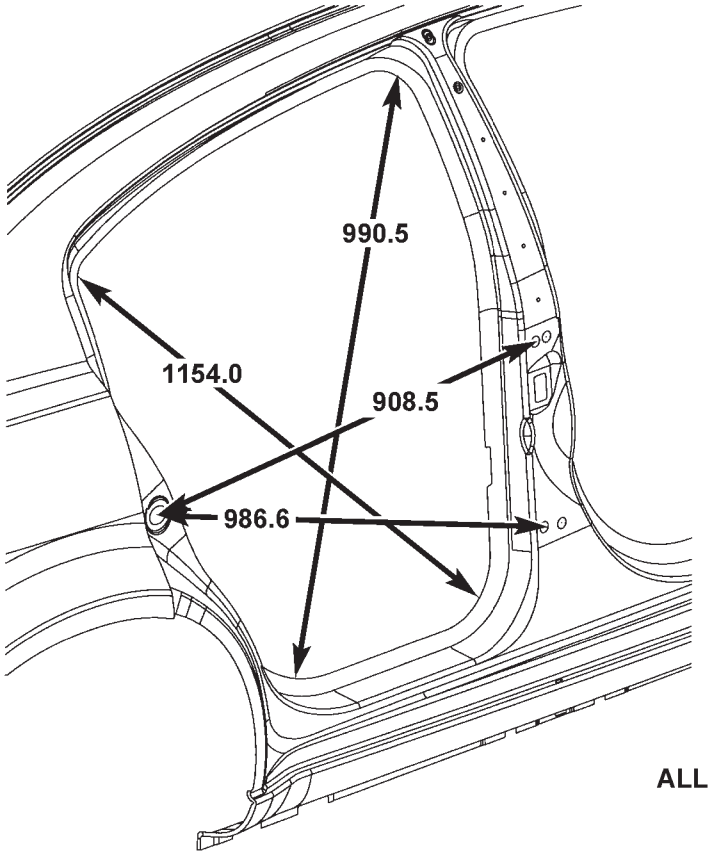

ALL DIMENSIONS ARE IN MILLIMETERS

81b6460a

Figure 4. REAR DOOR OPENING

Back to Index

DODGE AVENGER
FRAME/BODY DIMENSIONS

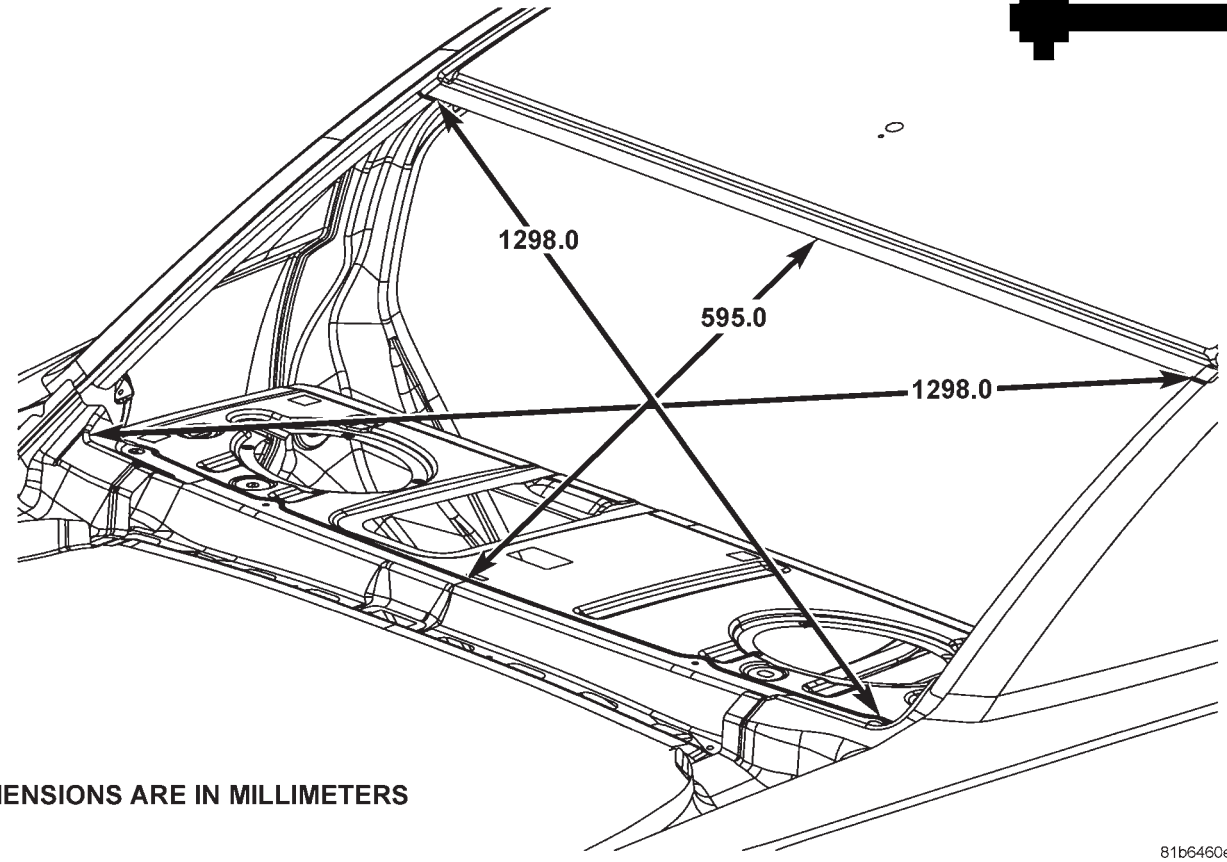

ALL DIMENSIONS ARE IN MILLIMETERS

Figure 5. REAR WINDOW OPENING

Back to Index

DODGE AVENGER
FRAME/BODY DIMENSIONS

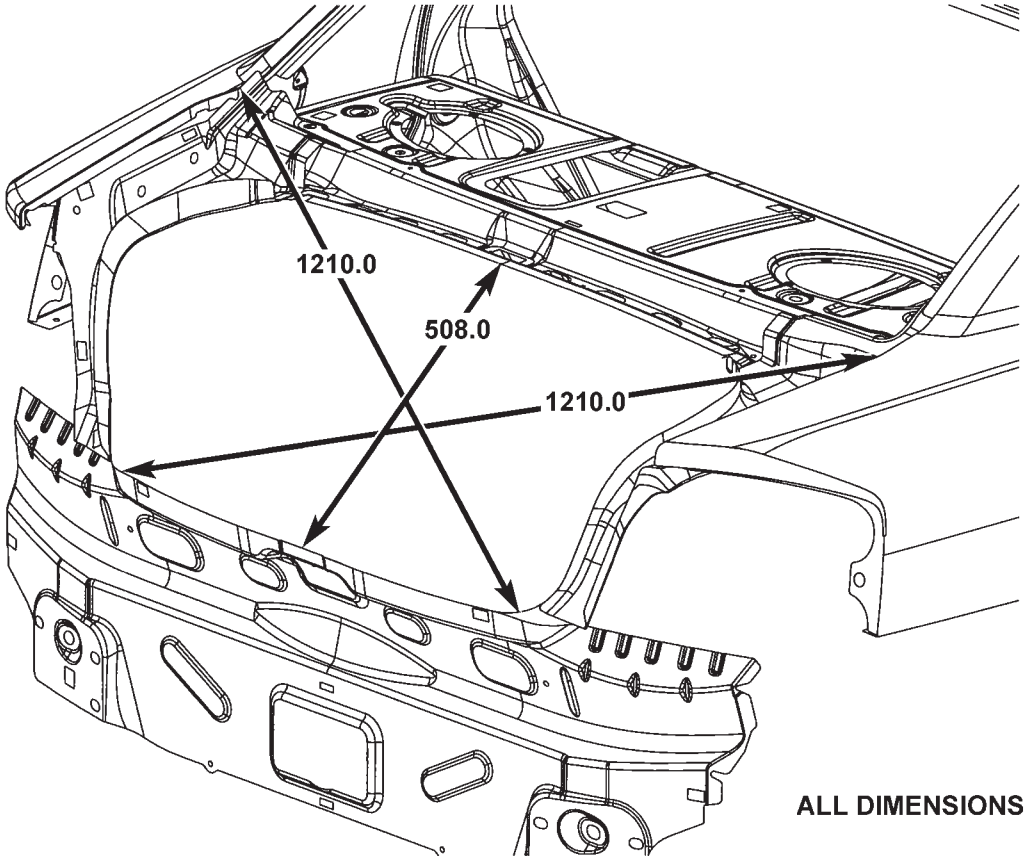

ALL DIMENSIONS ARE IN MILLIMETERS

81b64612

Figure 6. DECKLID OPENING

Back to Index

GAP AND FLUSH DIMENSIONS
CHRYSLER SEBRING

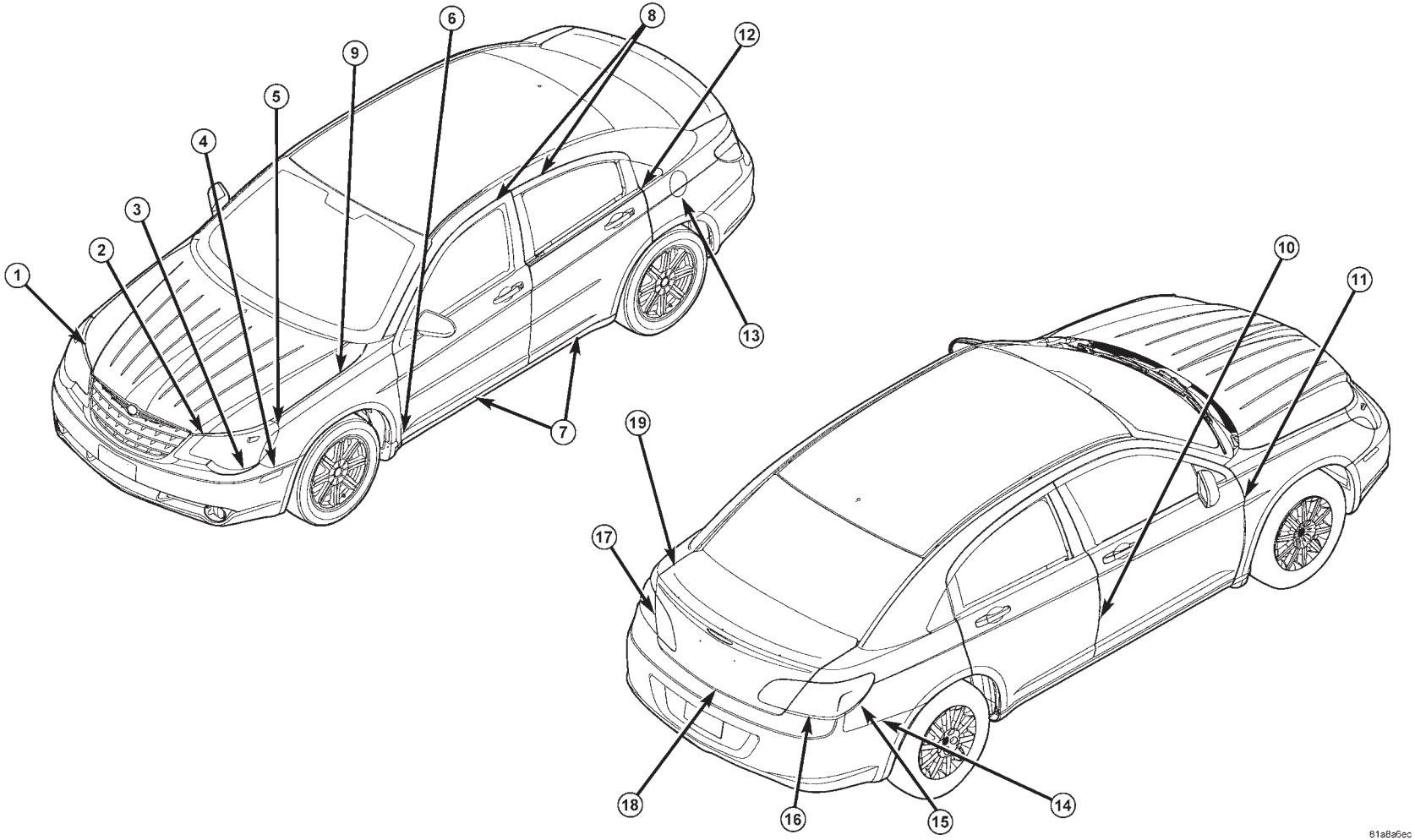

Back to Index

GAP AND FLUSH DIMENSIONS

DIMENSION	DESCRIPTION	GAP	FLUSH
1	Headlamp to Hood	3.5 +/- 1.7 Parallel within 1.5	Headlamp U/F 1.0 +/- 2.0 Parallel within 2.0
2	Fascia to Hood	6.0 +/- 1.5 Parallel within 2.0	Fascia U/F 2.5 +/- 2.0 Consistent within 2.0
3	Headlamp to Fascia	2.0 +/- 2.0 Parallel within 2.0	--
4	Fascia to Fender	Net to 1.0	+/- 1.0 Parallel within 1.5
5	Headlamp to Fender	2.0 +/- 1.7 Parallel within 2.0	Headlamp U/F 1.0 +/- 2.0
6	Fender to Body Side Aperture Sill Gap	2.0 +/- 1.0 Parallel within 1.5	Fender O/F 1.0 +/- 1.5 Parallel within 1.5
7	Body Side Aperture Sill to Front and Rear Door	6.0 +/- 1.5 Parallel within 1.5	--
8	Door Headers to Body Side Aperture	4.0 +/- 1.2 Parallel within 1.5	Door Header U/F 1.5 +/-1.2 Consistent within 1.5
9	Fender to Hood	3.5 +/- 1.2 Parallel within 1.5	0.0/1.0 +/- 1.5
10	Front Door to Rear Door	4.0 +/- 1.2 Parallel within 1.5	0.0 +/- 1.5 Parallel within 1.5 Front Door O/F 1.0 +/- 1.5 Below Belt
11	Fender to Front Door	4.0 +/- 1.0 Parallel within 1.5	Fender O/F 1.0 +/- 1.0 Parallel within 1.5
12	Rear Door to Quarter Panel	4.0 +/- 1.2 Parallel within 1.5	0.0 +/- 1.0 Parallel within 1.5
13	Fuel Filler Door to Quarter Panel	3.0 +/- 0.8 Parallel within 0.8	Fuel Filler Door U/F 0.5 +/- 1.0 Consistent within 1.5
14	Fascia to Bodyside	Net to 1.0	0.0 +/- 1.0 Parallel within 1.5
15	Tail Lamp to Body Side Aperture	2.0 +/- 1.5 Parallel within 2.0	Tail Lamp U/F 1.0 +/- 2.0 Parallel within 2.0
16	Tail Lamp to Fascia	2.0 +/- 2.0 Parallel within 2.0	--
17	Tail Lamp to Backup Lamp	4.0 +/- 2.0 Parallel within 2.0	Tail Lamp O/F 1.0 +/- 2.0 Parallel within 2.0
18	Fascia to Decklid	6.0 +/- 2.0 Parallel within 1.5	Fascia O/F 1.0 +/- 2.0
19	Decklid to Quarter Panel	4.0 +/- 1.5 Parallel within 1.5	Decklid U/F 0.5 +/- 1.5 Consistent within 1.5 (U/D) Decklid U/F 1.0 +/-1.5 (F/A)

2007 JS41 Chrysler

NOTE:

All measurements are in millimeters. O/F = Over Flush U/F = Under Flush
U/D = Up/Down F/A = Fore/Aft

Back to Index

GAP AND FLUSH DIMENSIONS
DODGE AVENGER

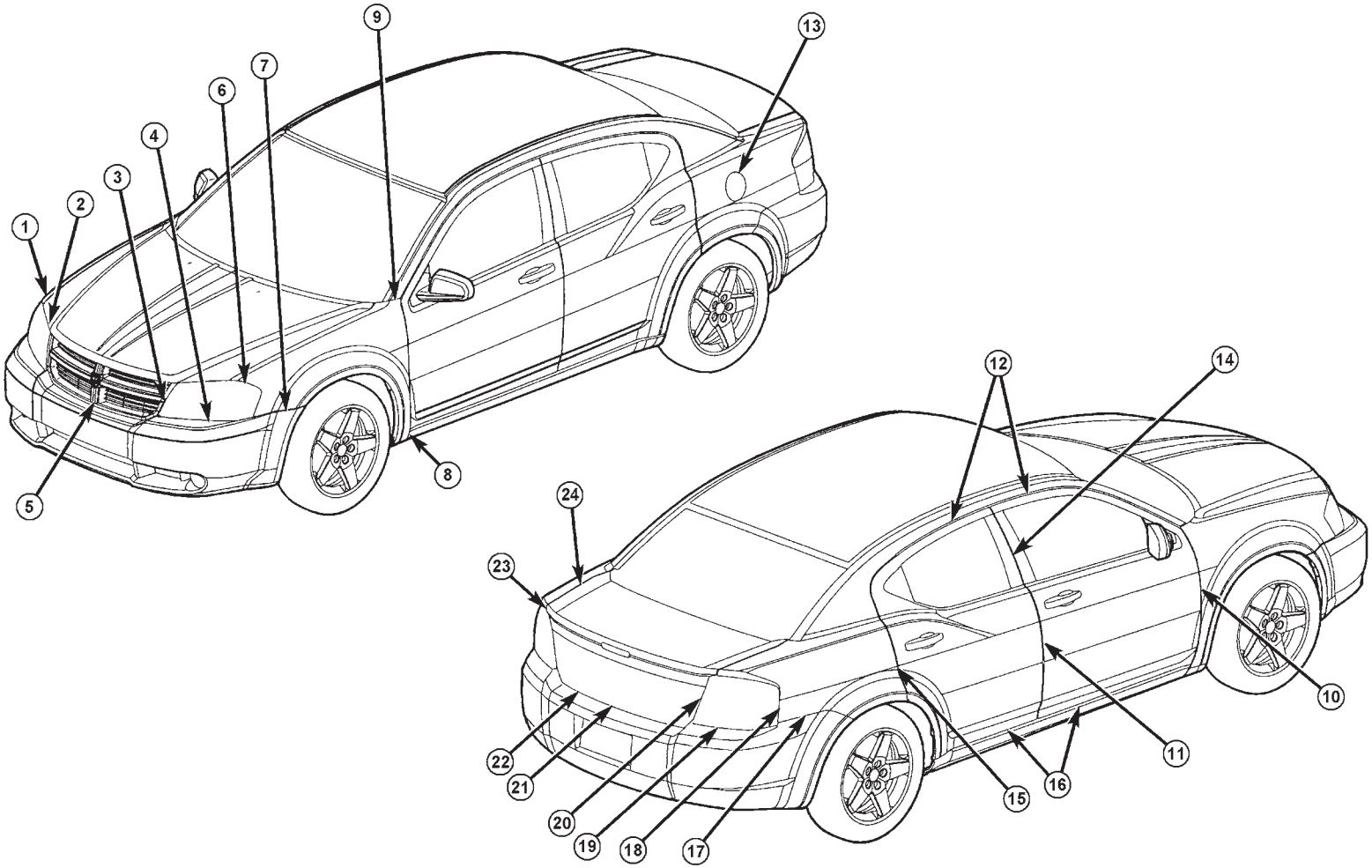

81b35e89

Back to Index

GAP AND FLUSH DIMENSIONS

DIMENSION	DESCRIPTION	GAP	FLUSH
1	Fender to Hood	3.5 +/- 1.2 Parallel within 1.5 and Symmetrical within 1.5 LH to RH	0.0 +/- 1.5 Extreme Aft Fender O/F up to 1.0 +/- 1.5
2	Headlamp to Hood	3.5 +/- 1.7 Parallel within 1.5 and Symmetrical within 2.0 LH to RH	Headlamp U/F 1.1 +/- 2.0 Consistent within 2.0 and Symmetrical within 3.0 LH to RH
3	Headlamp to Grille	2.0 +/- 2.0 Parallel within 2.0 and Symmetrical within 2.5 LH to RH	--
4	Headlamp to Fascia	2.0 +/- 2.0 Parallel within 2.0 and Symmetrical within 3.0 LH to RH	--
5	Grille to Fascia	Net to 1.0	--
6	Headlamp to Fender	2.1 +/- 1.7 Parallel within 2.0	Headlamp U/F 1.0 +/- 2.0 Consistent within 2.0
7	Fascia to Fender	Net to 1.0	Fascia 0.5 O/F @ Front to 0.4 U/F to Flush @ Rear +/- 1.0 Consistent within 1.5
8	Fender to Body Side Aperture Sill	2.0 +/- 1.0 Parallel within 1.5	Fender 1.0 O/F +/- 1.5 Consistent within 1.5
9	Fender to Body Side Aperture	4.0 @ X = 435 2.5 @ X = 480 +/- 1.0	--
10	Fender to Front Door	4.0 above Z=265 +/- 1.0 4.2 below Z=265+/- 1.0 Parallel within 1.5	Fender 1.0 O/F +/- 1.0 Consistent within 1.5
11	Front Door to Rear Door (Below Belt)	4.5 +/- 1.2 Parallel within 1.5	Front Door O/F 1.0 +/- 1.0 Consistent within 1.5
12	Door Headers to Body Side Aperture	4.0 +/- 1.2 Parallel within 1.5	Door U/F 1.7 +/- 1.2 Consistent within 1.5
13	Fuel Filler Door to Quarter Panel	3.0 +/- 0.8 Parallel within 0.8	Fuel Filler Door U/F 0.5 +/- 1.0 Consistent within 1.5
14	Front Door to Rear Door (Above Belt)	4.0 +/- 1.2 Parallel within 1.5	0.0 +/- 1.5 Consistent within 1.5
15	Rear Door to Quarter Panel	4.0 +/- 1.2 Parallel within 1.5	0.0 +/- 1.0 Consistent within 1.5
16	Front and Rear Door to Body Side Aperture Sill	6.0 +/- 1.5 Parallel within 1.5	--
17	Fascia to Body Side Aperture	Net to 1.0	0.0 +/- 1.0 Consistent within 1.5
18	Tail Lamp to Body Side Aperture	2.0 +/- 2.0 Parallel within 2.0	Tail Lamp U/F 1.0 +/- 2.0 Consistent within 2.0
19	Tail Lamp to Fascia	2.0 +/- 2.0 Parallel within 2.0	0.0 +/- 2.0 Consistent within 2.0
20	Decklid to Tail Lamp	4.0 +/- 2.0 Parallel within 2.0 and Symmetrical within 2.0 LH to RH	--
21	Decklid to Fascia	Cross/Car 5.1 +/- 2.0	--
22	Decklid to Fascia	U/D 5.9 +/- 2.0 Parallel within 2.0	--
23	Body Side Aperture to Decklid (Vertical)	5.0 +/- 1.5 Parallel within 1.5 and Symmetrical within 1.5 LH to RH	Body Side Aperture O/F 1.0 +/- 1.5 Consistent within 1.5
24	Body Side Aperture to Decklid (Horizontal)	4.0 +/- 1.5 Parallel within 1.5 and Symmetrical within 1.5 LH to RH	Body Side Aperture O/F 0.5 +/- 1.5 Consistent within 1.5

2008 JS41 Dodge

NOTE:

All measurements are in millimeters. O/F = Over Flush U/F = Under Flush
U/D = Up/Down F/A = Fore/Aft

Back to Index

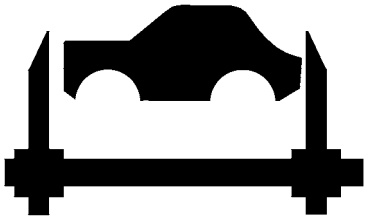

CHRYSLER SEBRING FRAME/BODY DIMENSIONS

Back to Index

FRAME DIMENSIONS – CHRYSLER SEBRING

Frame dimensions are listed in metric scale. All dimensions are from center of Principal Locating Point (PLP), or from center to center of PLP and transfer location. Vertical dimensions can be taken from the work surface to the locations indicated.

INDEX

Back to Index

FRAME/BODY DIMENSIONS

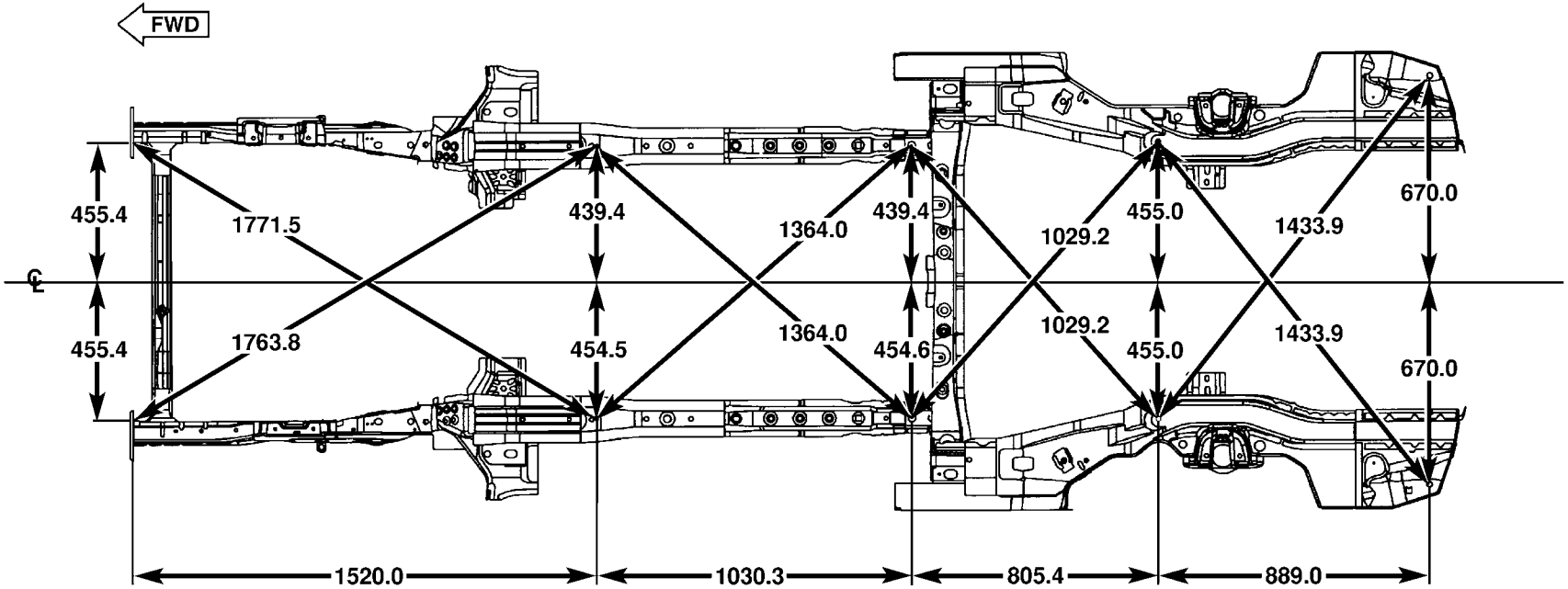

ALL DIMENSIONS ARE IN MILLIMETERS

MEASUREMENTS ARE FROM CENTER LINES OF HOLES (PLP's)

Figure 1. PLAN VIEW

Back to Index

FRAME/BODY DIMENSIONS

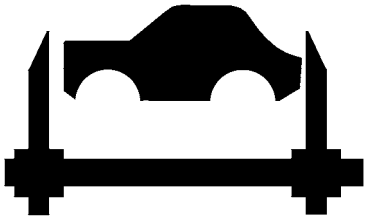

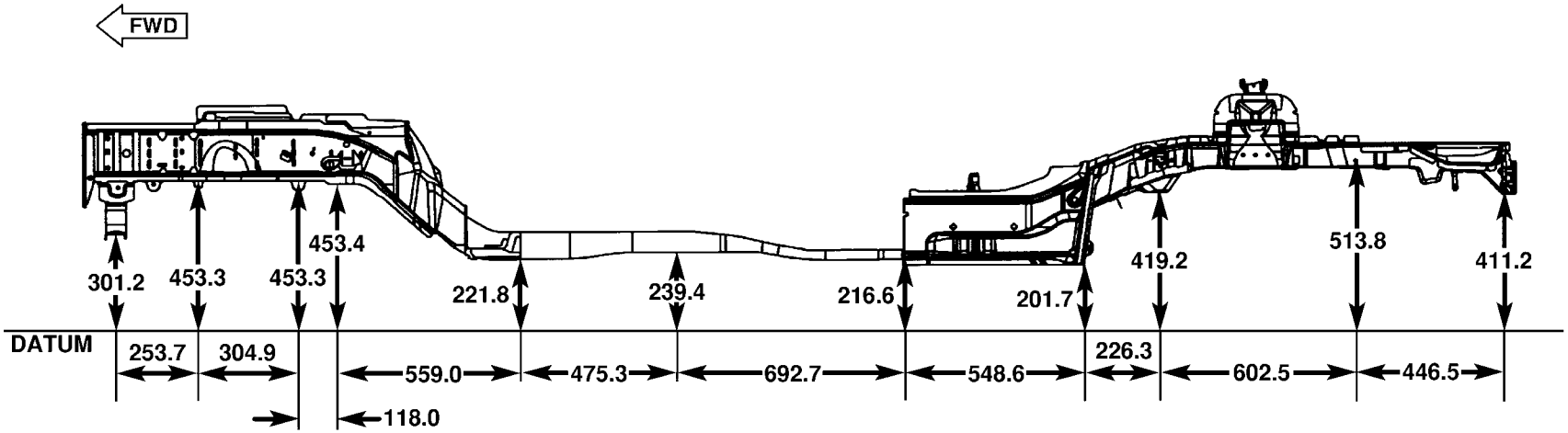

NOTE: P215/55R18 BSW TIRE USED FOR DATUM PLANE

ALL DIMENSIONS ARE IN MILLIMETERS

Figure 2. SIDE VIEW

Back to Index

CHRYSLER SEBRING – DODGE AVENGER
FRONT FRAME RAIL SECTIONING PROCEDURE

1. With vehicle mounted to appropriate pulling and 3-dimensional measuring equipment, complete the following procedure paying particular attention to body dimensions while fitting and welding panels.
2. Remove bumper components, cooling module, headlamps, and all other components for clear access to repair area.
3. Remove welds holding lower radiator crossmember to damaged rail (if crossmember is damaged, remove completely).

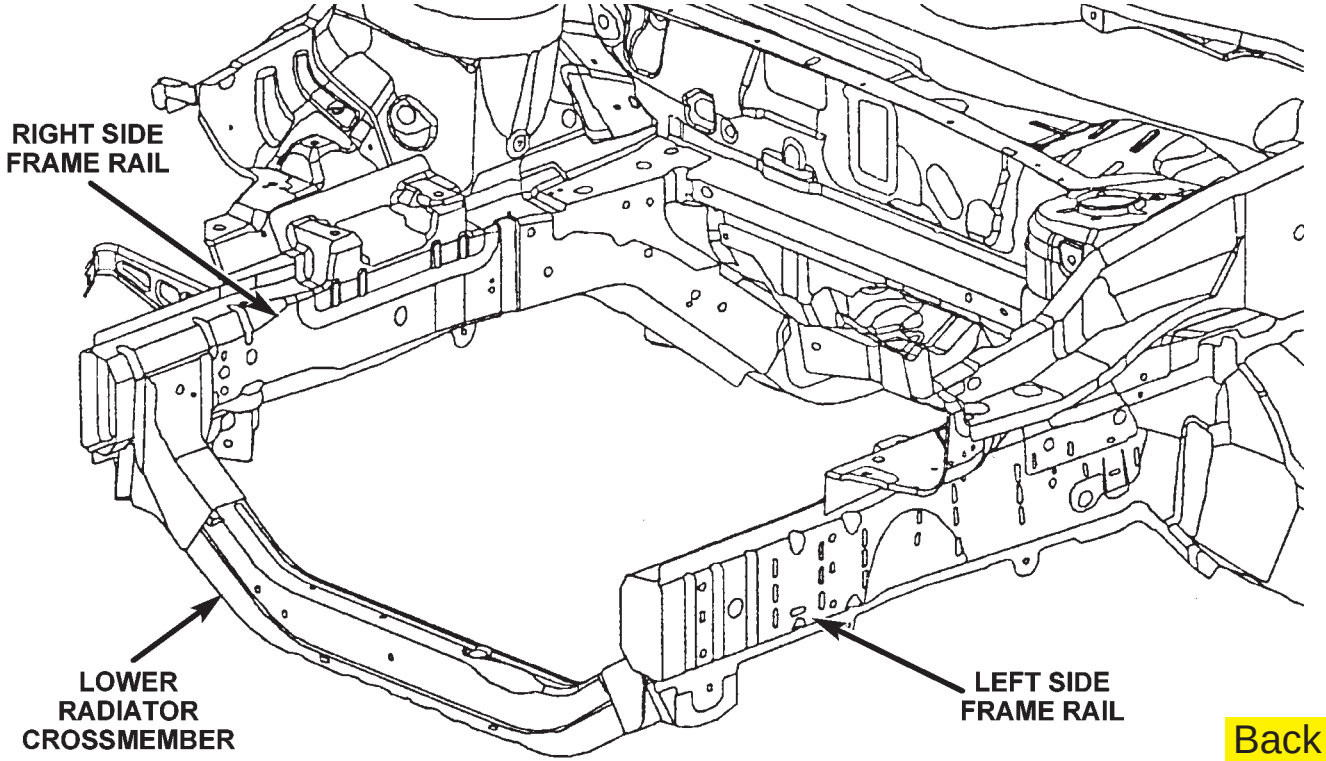

Back to Index

4. Right Side Front Rail:
   a. Remove the 2 bolts attaching the washer bottle mounting bracket.
   b. Drill out the first weld holding the fender shield to the front rails.
   c. Cut vertically along a line 15mm (+/- 3mm) forward of the forward edge of the 2 holes.

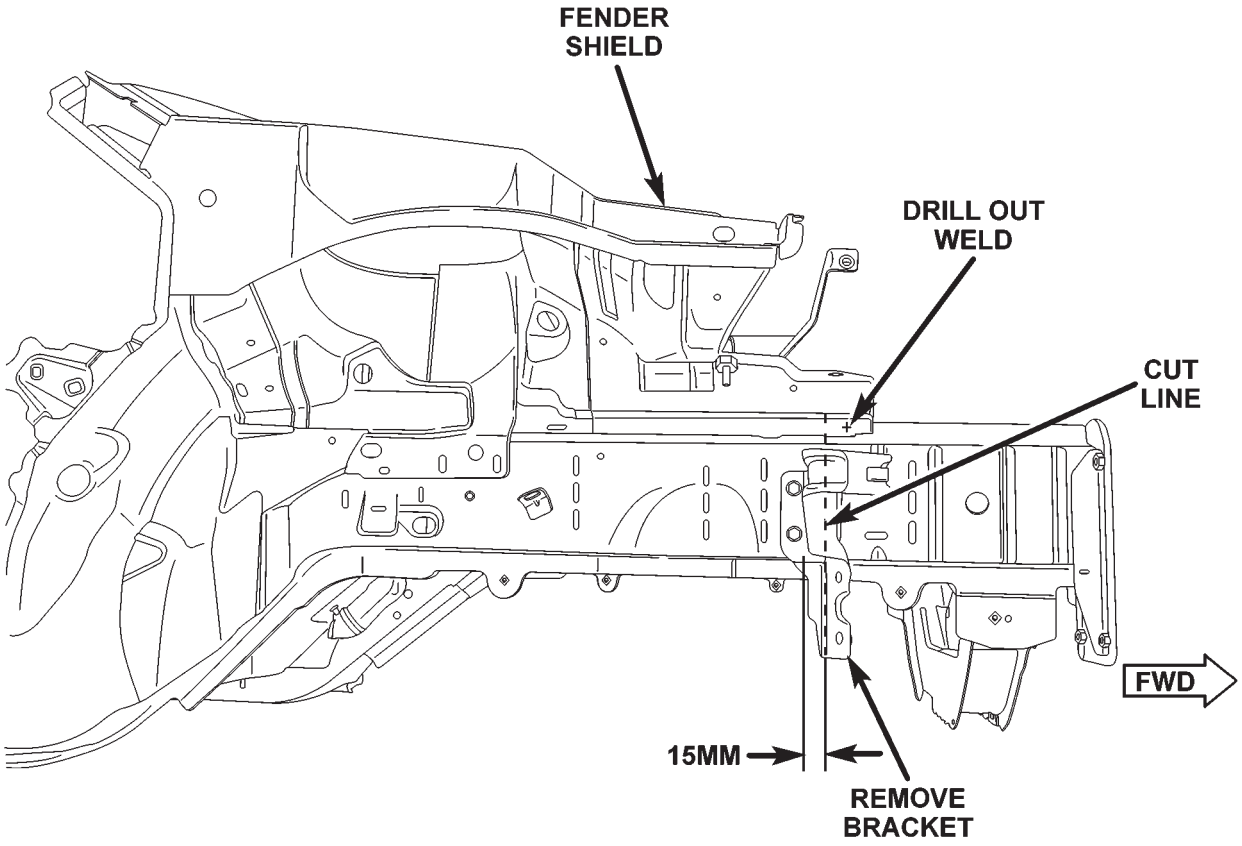

Back to Index

5. Left Side Front Rail:

Cut vertically along a line at the rearward edge of the 3 slots in the outer rail.

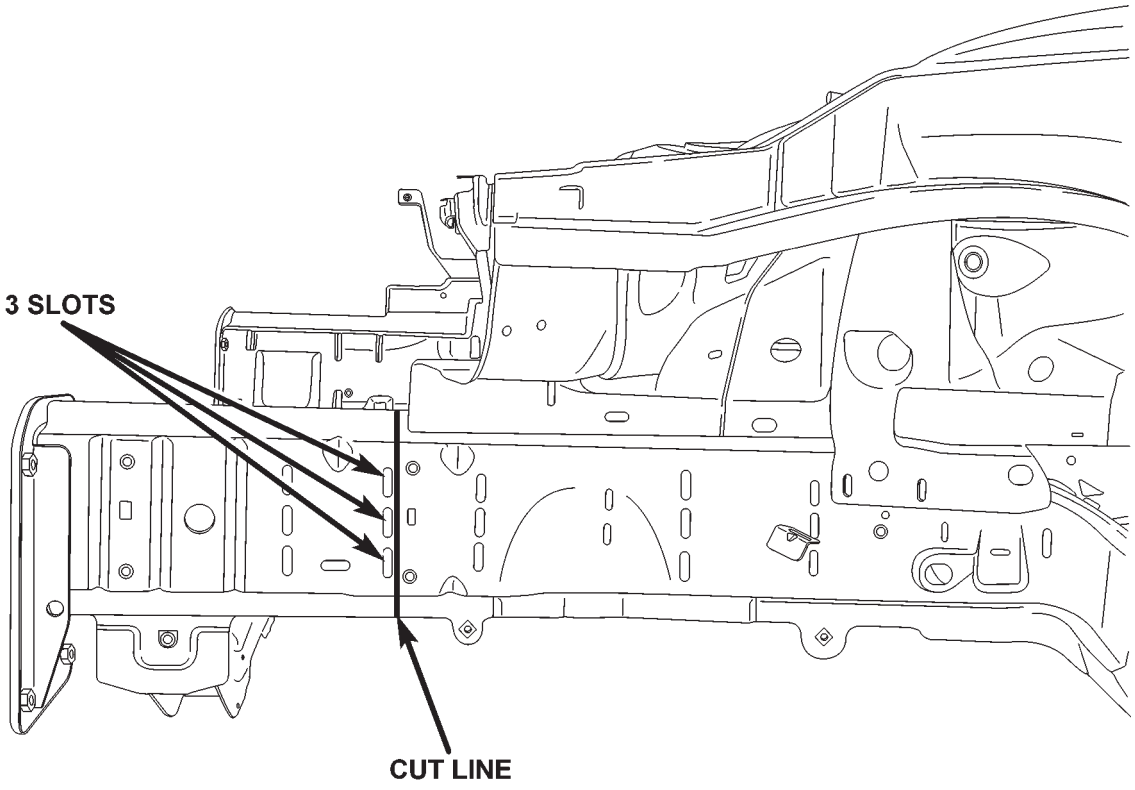

Back to Index

6. Mark the replacement part in the same location.
7. Using a cut-off wheel, reciprocating saw, or equivalent:
   a. Cut all existing parts on the forward side of the scribe line using care not to damage the material that will not be removed.
   b. Cut all replacement parts on the rearward side of the scribe line again using care not to make any additional damage, but do not discard any material yet.
8. Clean all sharp edges and create a slight taper for weld purposes.

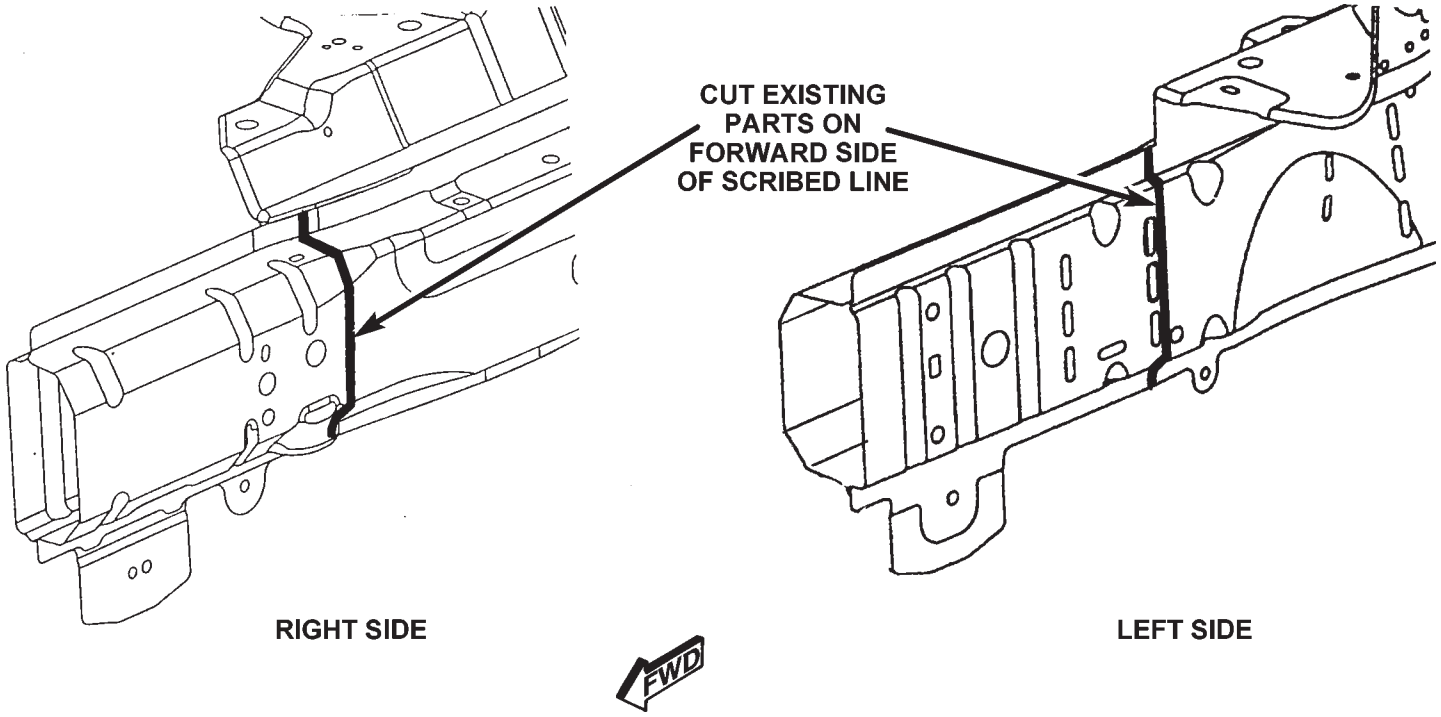

Back to Index

9. From the remaining replacement part, cut a 19mm strip from both the inner and outer rail. Clip off the weld flanges, top and bottom, and dress edges. These pieces will be the weld backers.
10. Prepare welding equipment per the weld chart at the end procedure.
11. Install the weld backers into the frame rail, centering them to cut edge. Clamp and tack the weld backer in position when proper fit is confirmed.

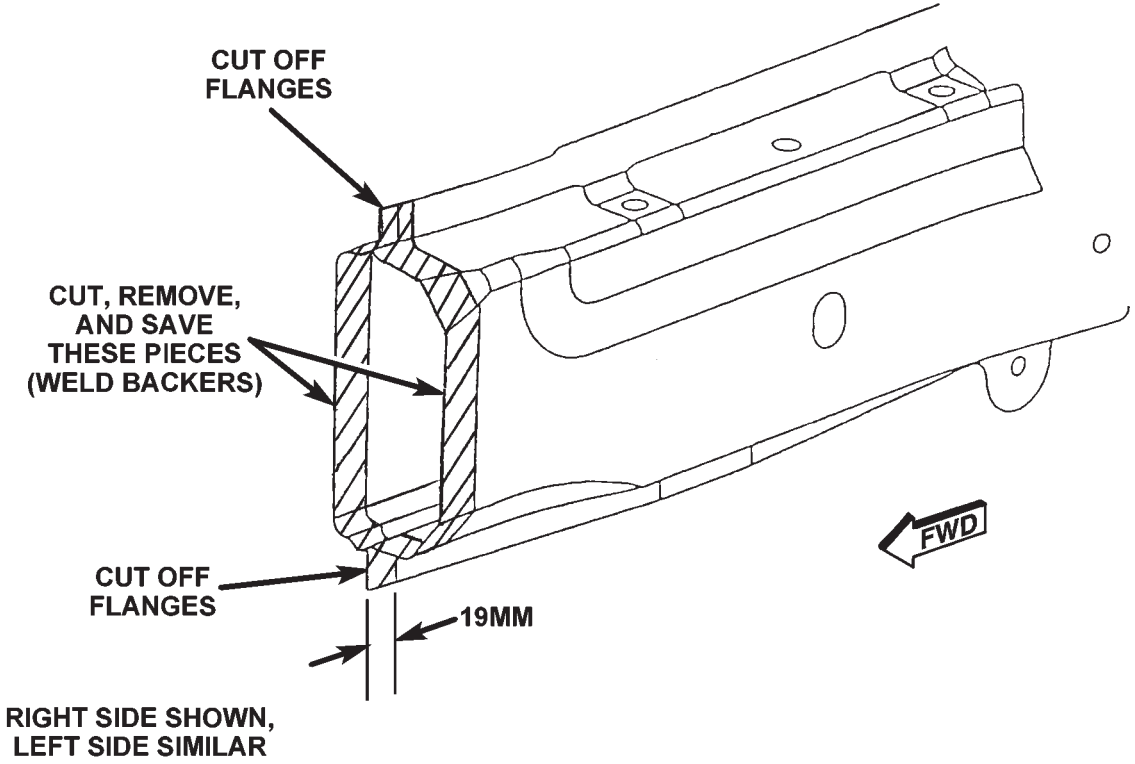

Back to Index

12. Weld using a skip-stitch method until the full length of the joint is completed on both the inner and outer rail. To avoid excessive heat buildup, move between the inner and outer rail during welding.
13. Dress welds without removing any base material paying particular attention to the mounting surface of the outer rail.

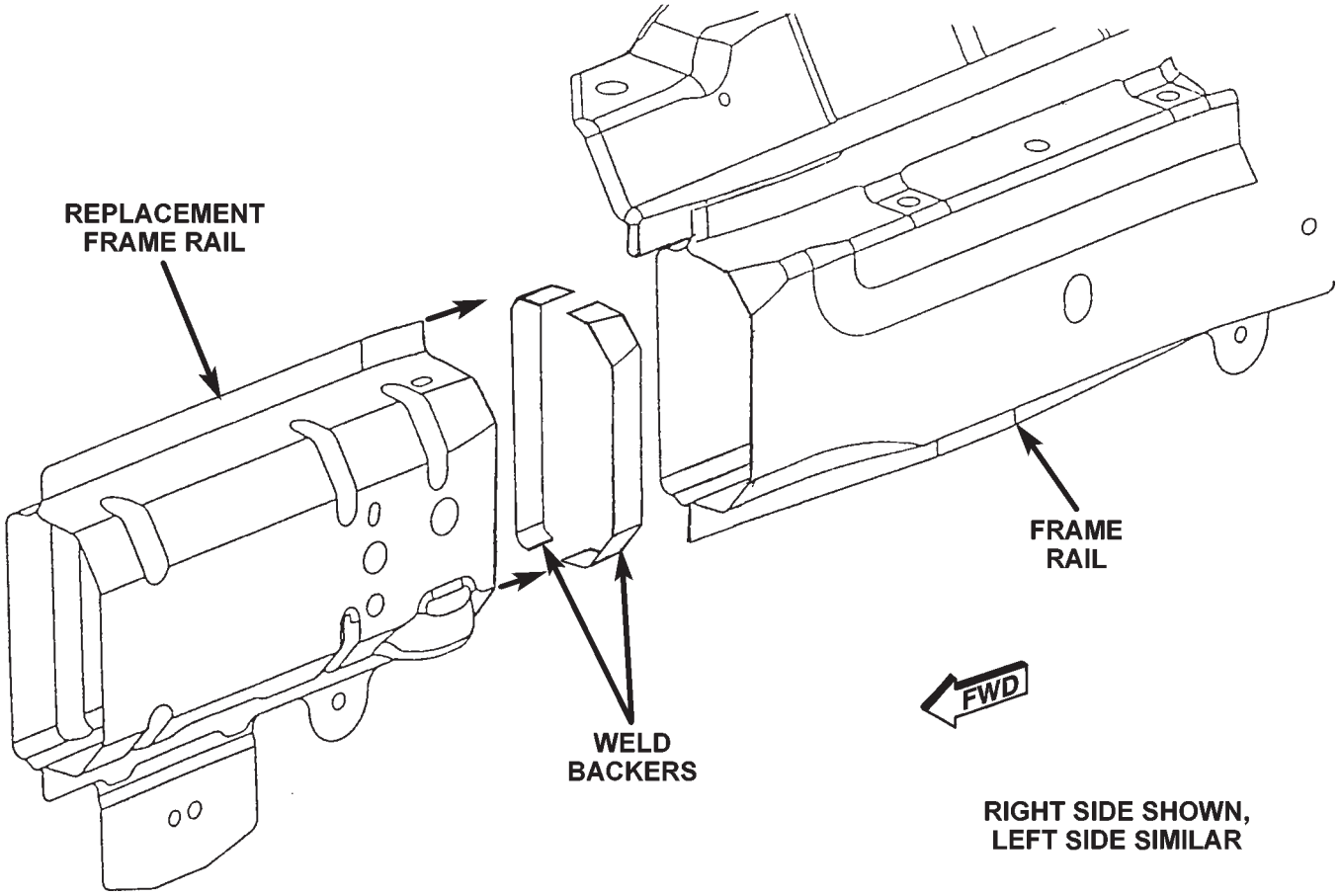

Back to Index

14. Either install new or reposition th lower radiator crossmember and clamp in place and weld.
15. Clean all repaired areas and apply appropriate refinish and corrosion protection material.

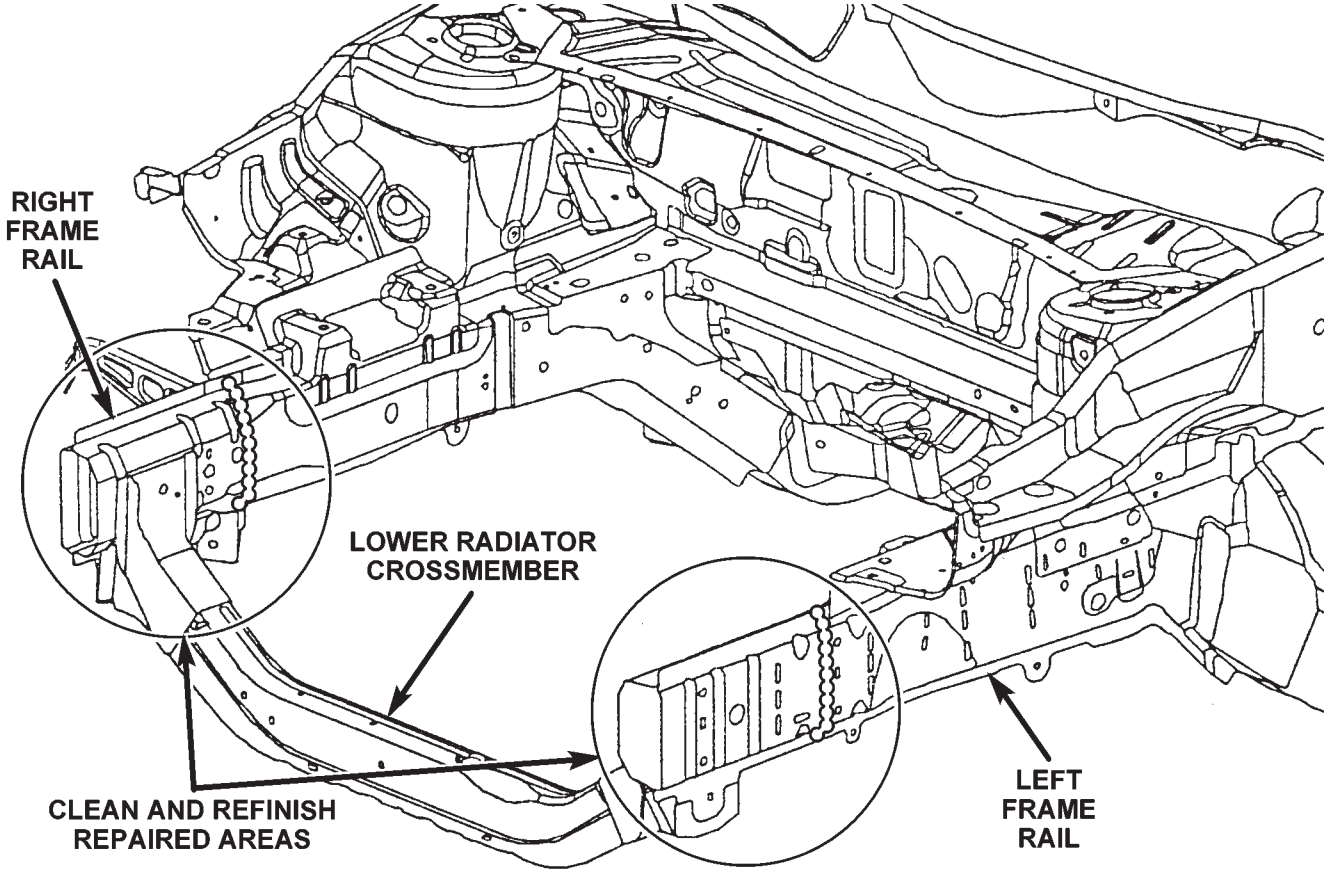

Back to Index

MANUFACTURER ADVERTISEMENTS

- **DAIMLERCHRYSLER NON-STRUCTURAL SHEET METAL REPAIR MANUAL**
- **DAIMLERCHRYSLER PAINT CONDITION DECK, SEALER SOUND DEADENER REPAIR GUIDE**
- **DAIMLERCHRYSLER PLASTIC REPAIR GUIDE, WELDING & WELD BONDING MANUAL**
- **HEMI.COM**
- **MOPAR PARTS**
- **SHERWIN-WILLIAMS**
- **TEAM PSE FACILITY PLANNING SERVICES, DAIMLERCHRYSLER REFINISH PAINT SUPPLIERS AND PAINT MATERIALS/SYSTEMS**
- **TECH AUTHORITY**

Copies of the following Body Repair Manuals are available by calling 1-800-890-4038

- Chrysler 300 (81-316-0531CD)
- Chrysler Pacifica (81-316-0530-CD)
- Chrysler PT Convertible (81-316-0531-CD)
- Dodge Caliber (81-316-0737CD)
- Dodge Dakota (81-316-0634CD)
- Dodge Durango (81-316-0430CD)
- Dodge Nitro (81-316-0741CD)
- Dodge Ram (81-316-0739-CD)
- Dodge Sprinter Van (81-316-0533-CD)
- Jeep Compass (81-316-0738-CD)
- Jeep Commander (81-316-0636-CD)
- Jeep Grand Cherokee (81-316-0635-CD)
- Jeep Patriot (81-316-0740CD)
- Jeep Wrangler (81-316-0742CD)

Back to Index

CHRYSLER Jeep SERVICE

Stick with the Specialists®

NON-STRUCTURAL SHEET METAL REPAIR MANUAL

Back to Index

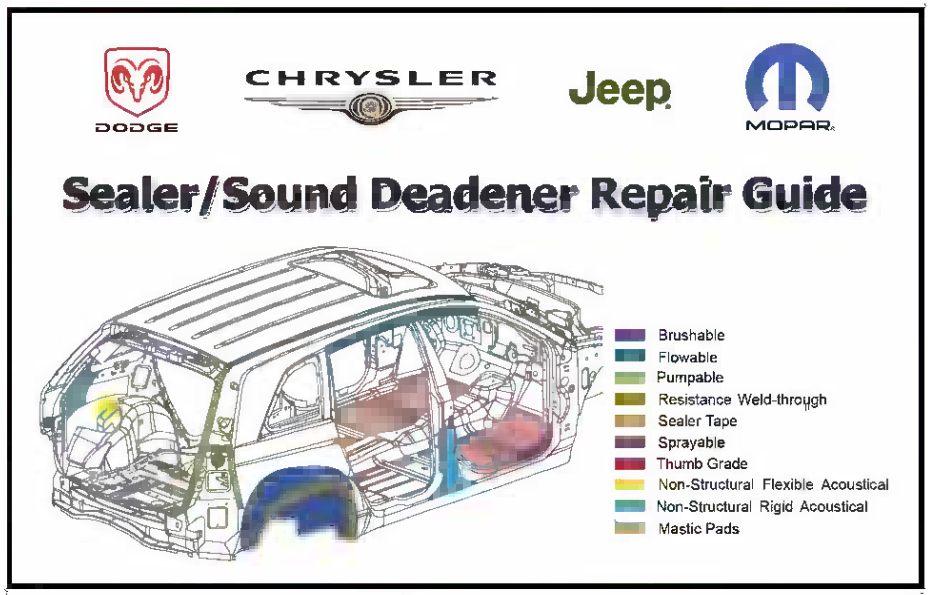

Publication # 81-316-0731

Publication # 81-316-0507

Additional copies of these publications are available by calling
1-800-890-4038

Back to Index

Additional Support and Technical Information

Publication Number
81-316-0711

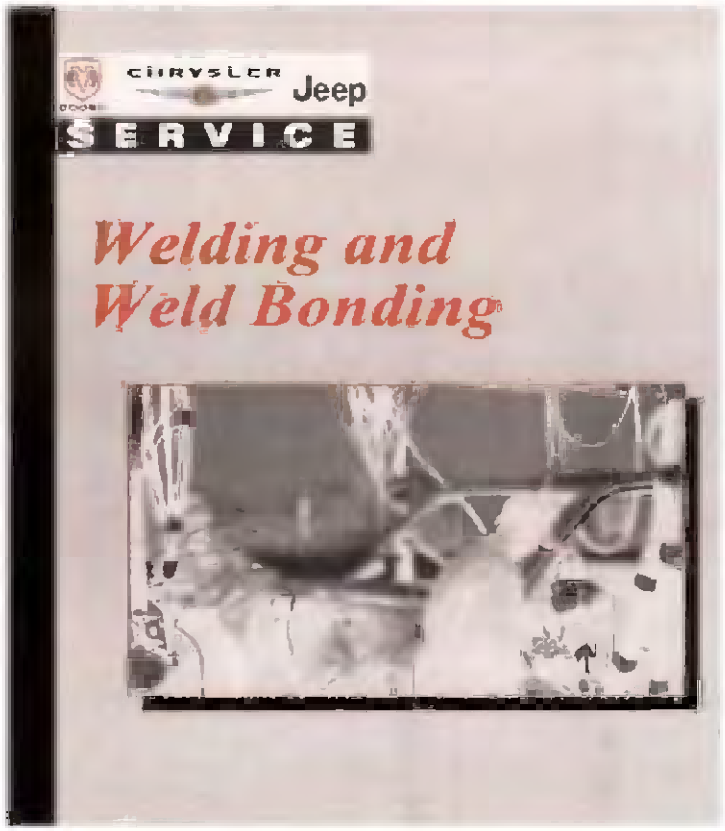

Publication Number
81-316-0740

Additional copies may be ordered by calling
1-800-890-4038

Back to Index

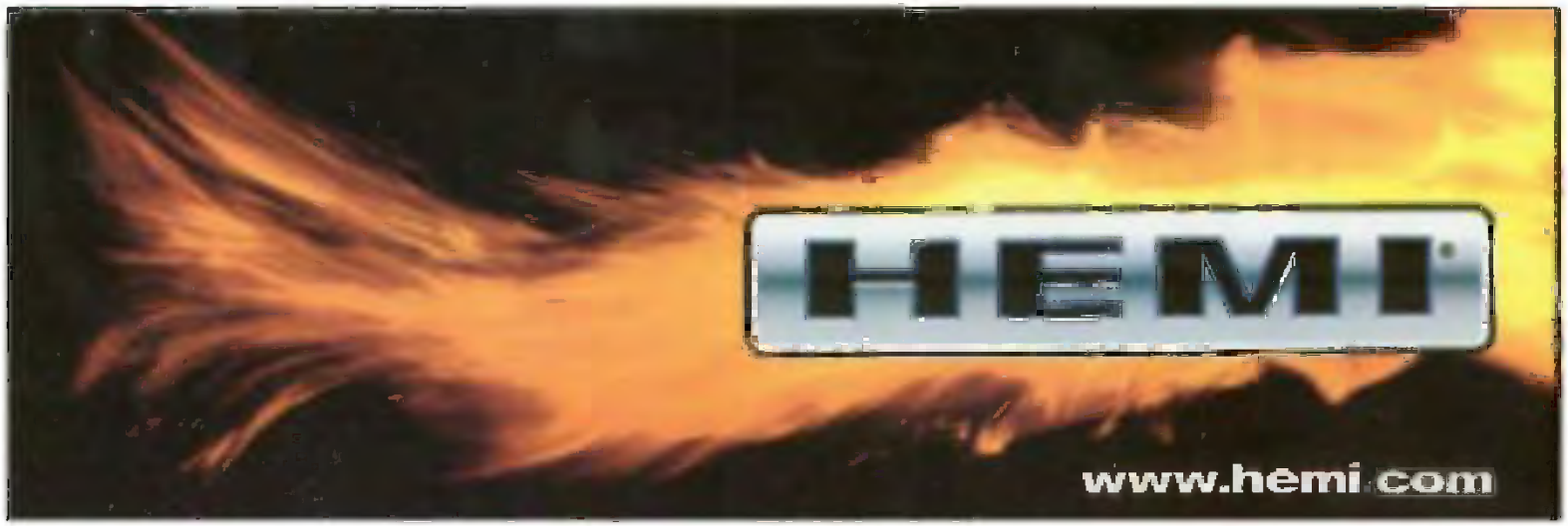

HEMI.com, the official DaimlerChrysler HEMI® Web site.

Learn about the history of the early HEMI®, built by Chrysler, DeSoto, and Dodge. Get all the details on the 426 HEMI on the street and in race cars, from NASCAR stock cars at Daytona and Darlington, to NHRA Super Stock, Funny Cars, and Top Fuel dragsters. Meet the engineers who designed the original HEMI, the 426 HEMI and the new 5.7 HEMI. Learn how Don Garlits and other legendary racers adopted the 331, 354, 392, and finally the 426 Hemi as they set records year after year.

Back to Index

AUTHENTIC PERFORMANCE™

COOL PRODUCTS DESERVE COOL REPAIRS.

2007 DODGE AVENGER

The Dodge Avenger. It's new, it's hot and it's got attitude aplenty. Will your collision repair job give the Avenger the street credit it deserves? It will if you use only Authentic Mopar Collision Repair Parts. Leave the aftermarket and salvage parts by the curb. They simply don't measure up to the quality and appearance of Mopar Collision Repair Parts.

Mopar Collision Repair Parts are the only original equipment, factory products designed specifically for Dodge, Chrysler and Jeep® vehicles. That means precise fit and finish, superior corrosion protection, outstanding performance and great looks that last for the long haul. With Mopar Collision Repair Parts, you get:

- Unsurpassed quality
- Competitive pricing
- Immediate availability
- Lifetime limited warranty

Are you using Authentic Mopar Collision Repair Parts? If not, your business is an accident waiting to happen.

Call your local Dodge dealer and get the Authentic Mopar Collision Repair Parts you need to do the job right.

Back to Index

AUTHENTIC PERFORMANCE™

MOPAR

DON'T WORRY. WE'VE GOT IT.

The brand-new Chrysler Sebring is flying off showroom floors, but don't worry. If collision repair is required, Mopar has the parts you need right now to get your customers back on the road quickly.

With authentic Mopar collision repair parts, you always get DaimlerChrysler original equipment quality, and that means a superior fit and finish every time. Combine that with immediate availability, fast delivery and competitive pricing, and it's easy to see why Mopar is your best choice. Plus, Mopar Collision Repair Parts come with a limited warranty backed by Chrysler, Dodge and Jeep® dealers nationwide.

Call your local dealer today for all your Mopar parts needs.

CHRYSLER

Back to Index

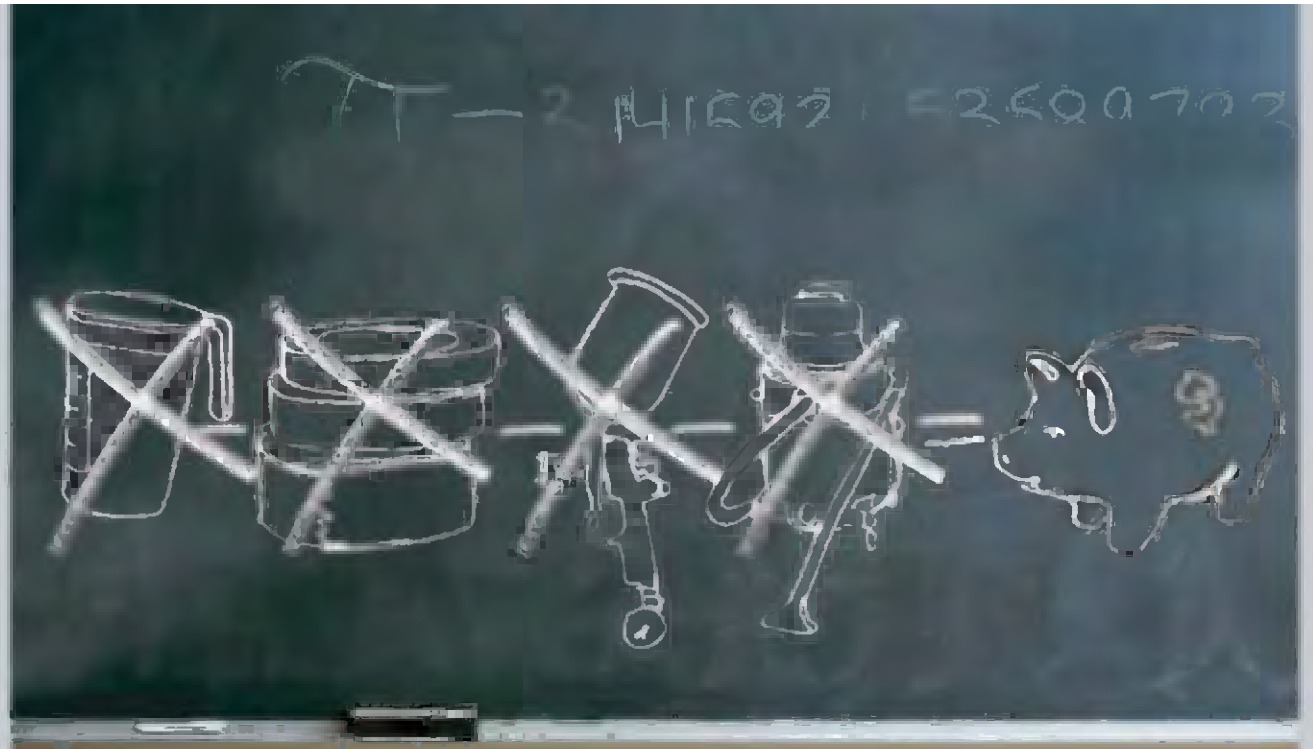

Addition by Subtraction

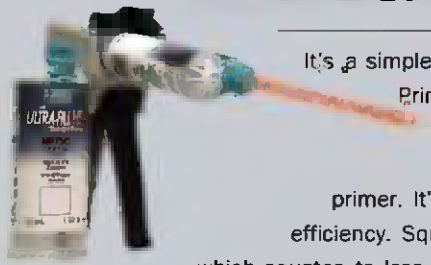

It's a simple equation: Using the right tool for the job adds up to a stronger bottom line. The new NP75C Squeegee Prime from Sherwin-Williams Automotive Finishes is the first ever direct to metal spreadable primer that you can apply like body filler or glazing putty.

There's no mixing, no masking, no spraying and no clean up with this DTM high solids ISO-free primer. It's packaged in a dual chambered cartridge and delivered through a static mixing tube for 100% transfer efficiency. Squeegee Prime provides excellent bare metal adhesion, corrosion protection and filling properties, which equates to less labor and increased profits for you.

Put the best finish on your bottom line with Sherwin-Williams.

SHERWIN-WILLIAMS.
Automotive Finishes

Back to Index

Back to Index

Tech Authority Website contains the most complete listings, descriptions, and ordering information for DaimlerChrysler Corporation service information materials. The materials included in Tech Authority cover every aspect of repairing and maintaining Chrysler, Plymouth, Dodge, Dodge Truck and Jeep® vehicles.

Tech Authority is an extensive online catalogue of Diagnostic procedure manuals, student reference Books, tech training programs, owner's manuals, Service manuals, and technical service bulletin Manuals. The materials range from written and Illustrated books to the highly acclaimed Master Tech Video series.

By Telephone: Monday - Friday, 8:00-4:30 E.S.T.

Telephone orders may be placed at the number below. Credit cards are accepted (no COD's). Please have your Order information available at time of call.

By Phone: (800) 890-4038
By Fax: (440) 572-0815

Visit our website at:
www.techauthority.daimlerchrysler.com

Back to Index

CHRYSLER SEBRING
FRONT FRAME RAIL SECTIONING PROCEDURE

1. With vehicle mounted to appropriate pulling and 3-dimensional measuring equipment, complete the following procedure paying particular attention to body dimensions while fitting and welding panels.
2. Remove bumper components, cooling module, headlamps, and all other components for clear access to repair area.
3. Remove welds holding lower radiator crossmember to damaged rail (if crossmember is damaged, remove completely).

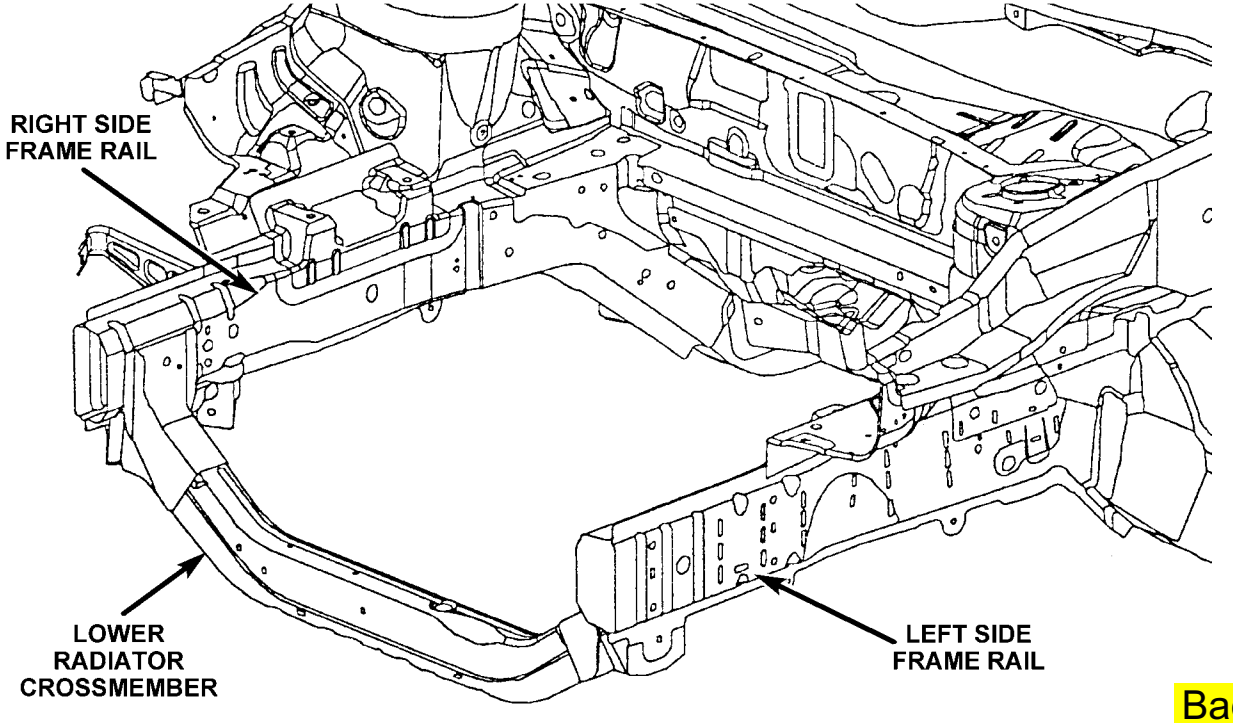

Back to Index

4. Right Side Front Rail:
   a. Remove the 2 bolts attaching the washer bottle mounting bracket.
   b. Drill out the first weld holding the fender shield to the front rails.
   c. Cut vertically along a line 15mm (+/- 3mm) forward of the forward edge of the 2 holes.

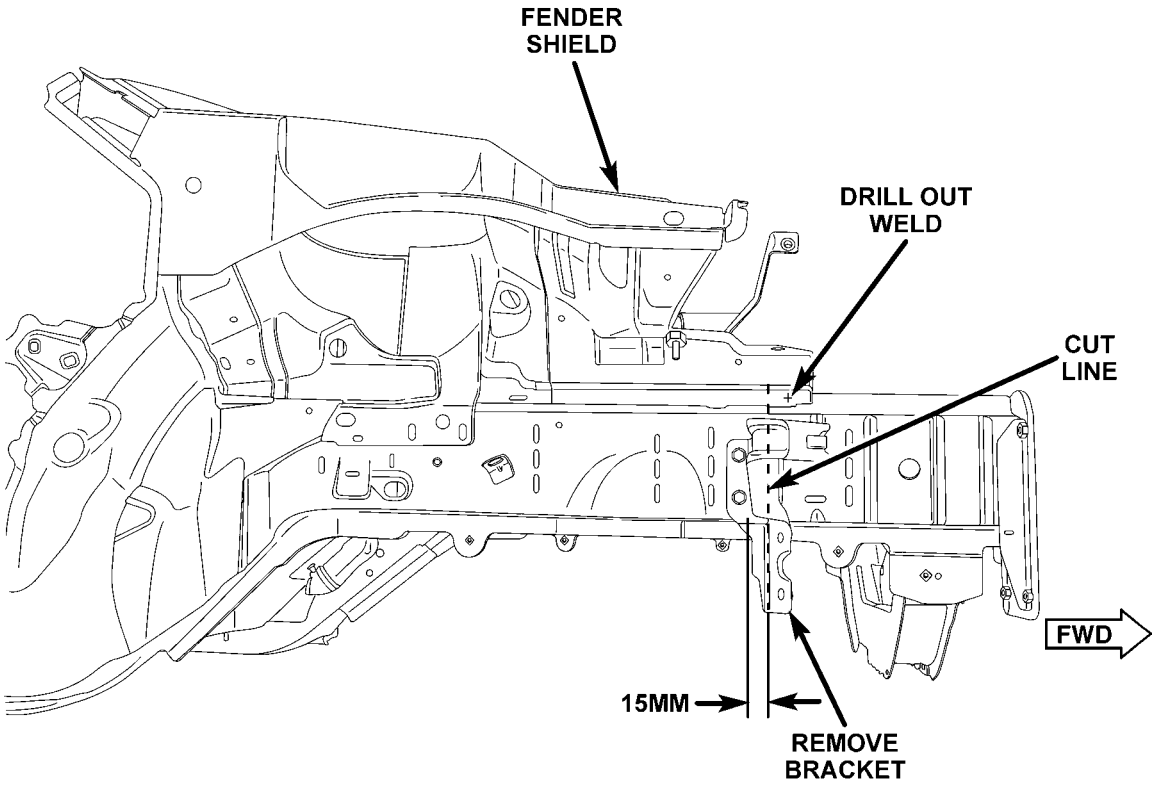

Back to Index

5. Left Side Front Rail:

Cut vertically along a line at the rearward edge of the 3 slots in the outer rail.

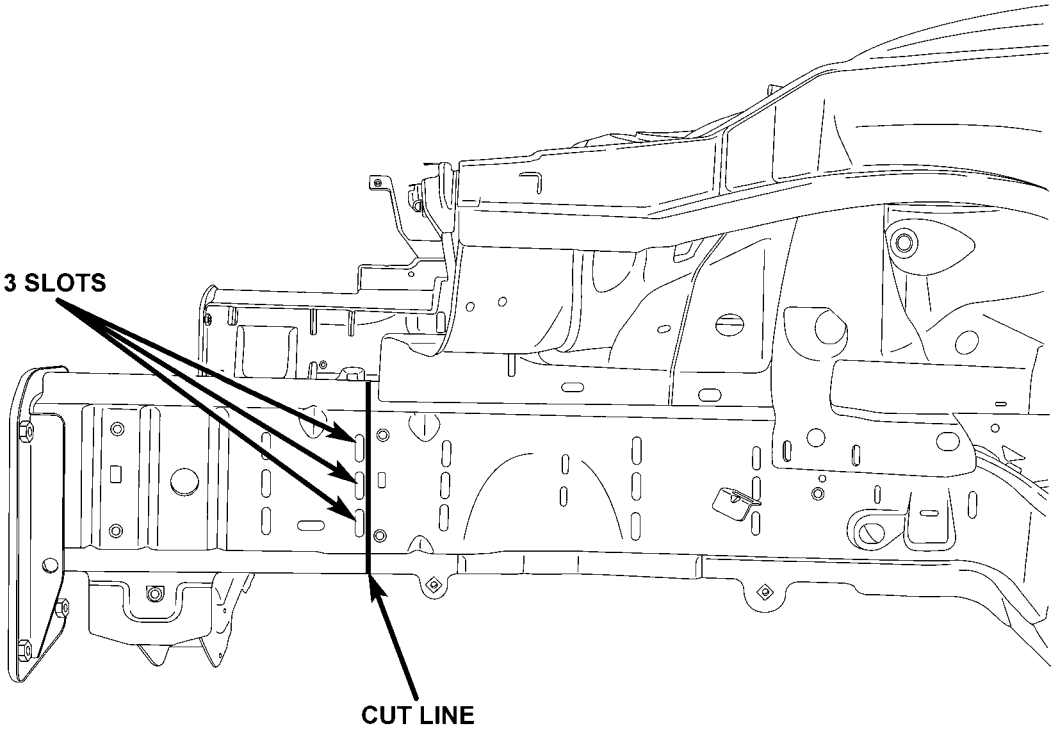

Back to Index

6. Mark the replacement part in the same location.
7. Using a cut-off wheel, reciprocating saw, or equivalent:
   a. Cut all existing parts on the forward side of the scribe line using care not to damage the material that will not be removed.
   b. Cut all replacement parts on the rearward side of the scribe line again using care not to make any additional damage, but do not discard any material yet.
8. Clean all sharp edges and create a slight taper for weld purposes.

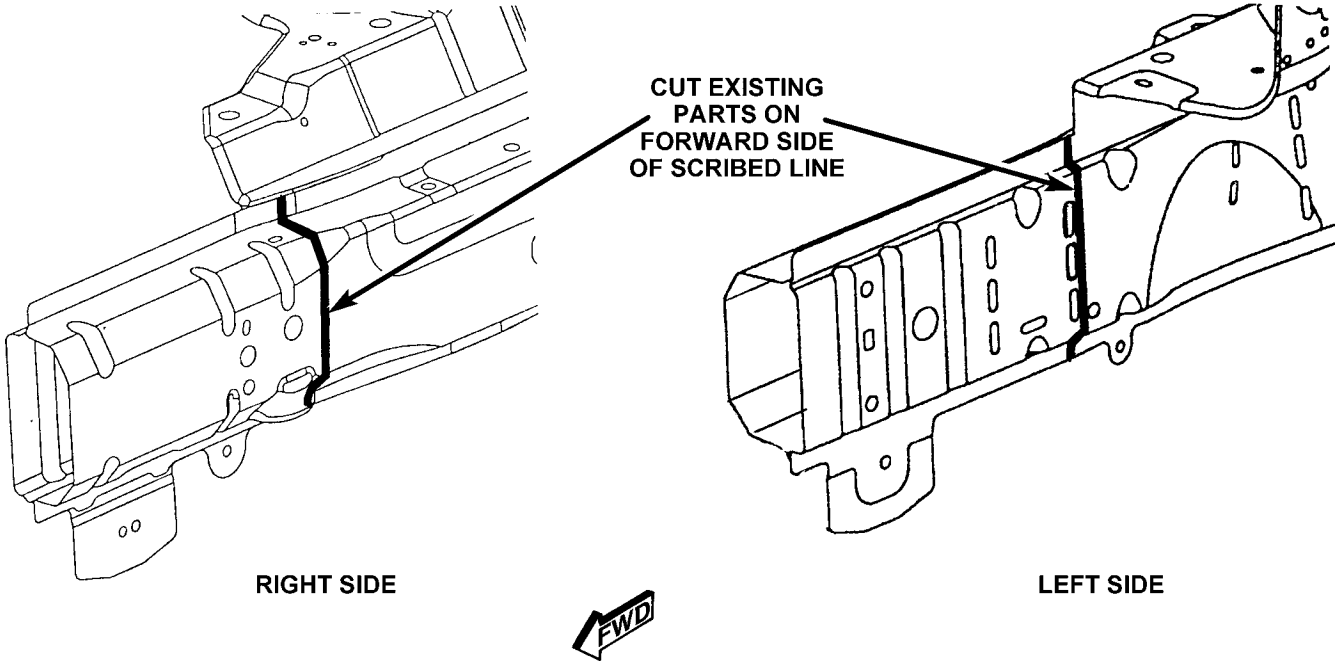

Back to Index

9. From the remaining replacement part, cut a 19mm strip from both the inner and outer rail. Clip off the weld flanges, top and bottom, and dress edges. These pieces will be the weld backers.
10. Prepare welding equipment per the weld chart at the end procedure.
11. Install the weld backers into the frame rail, centering them to cut edge. Clamp and tack the weld backer in position when proper fit is confirmed.

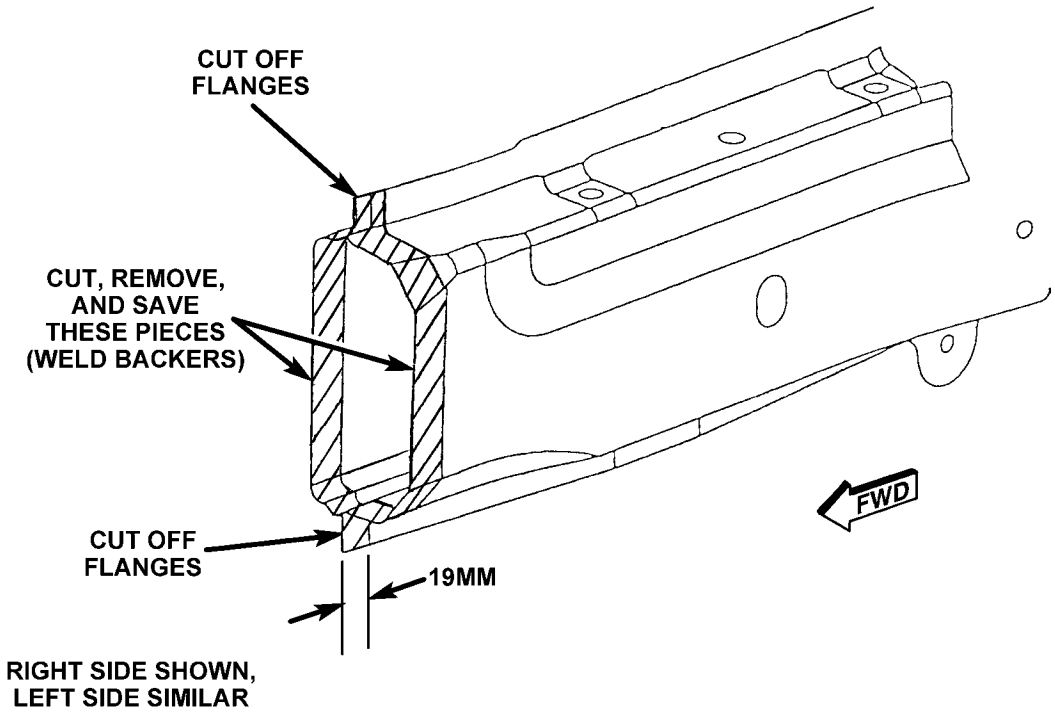

Back to Index

12. Weld using a skip-stitch method until the full length of the joint is completed on both the inner and outer rail. To avoid excessive heat buildup, move between the inner and outer rail during welding.
13. Dress welds without removing any base material paying particular attention to the mounting surface of the outer rail.

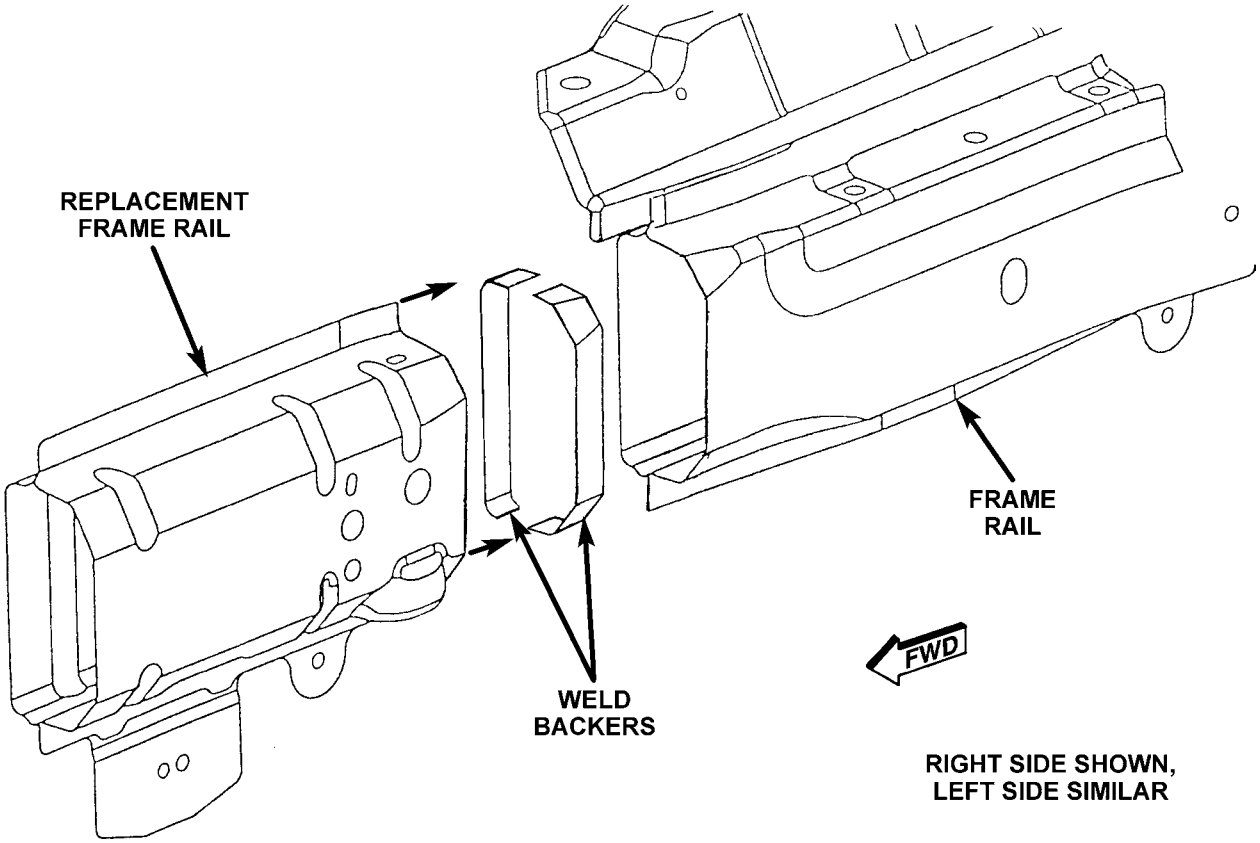

Back to Index

14. Either install new or reposition th lower radiator crossmember and clamp in place and weld.
15. Clean all repaired areas and apply appropriate refinish and corrosion protection material.

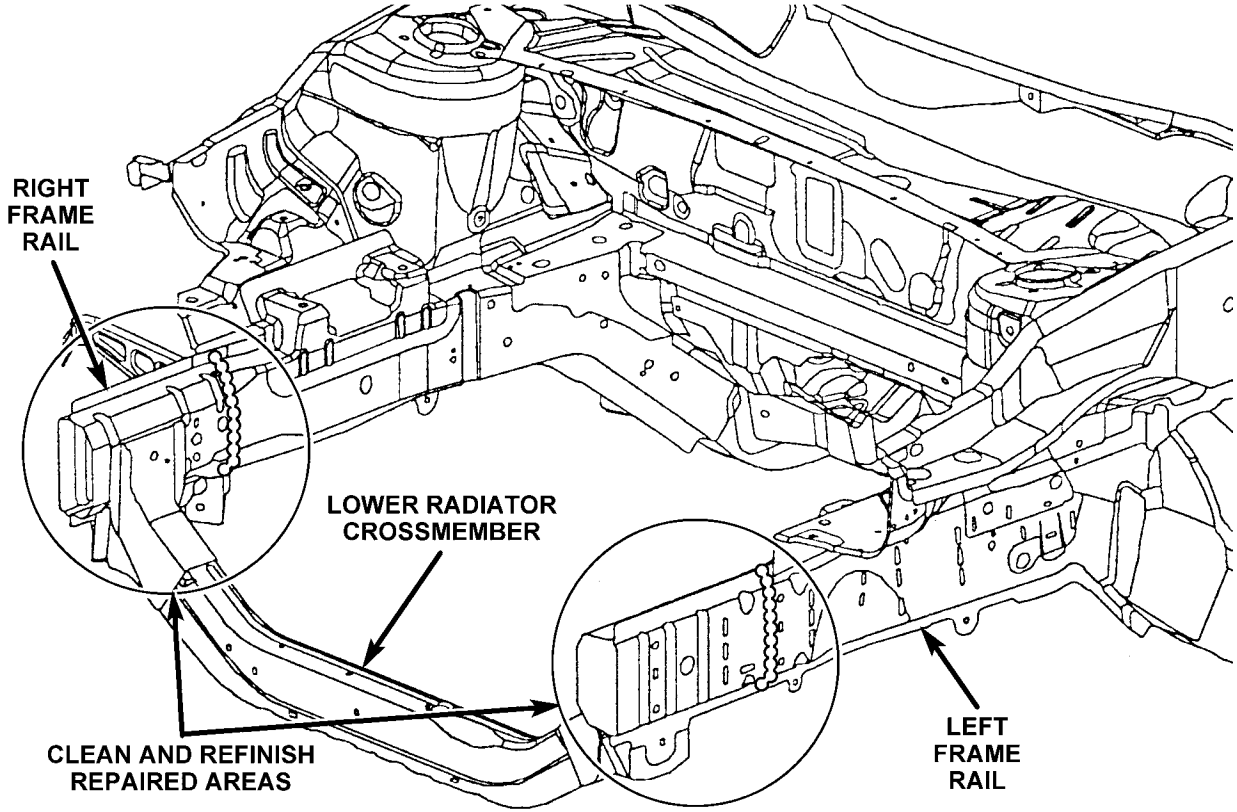

Back to Index

CHRYSLER SEBRING FRONT DOOR SECTION

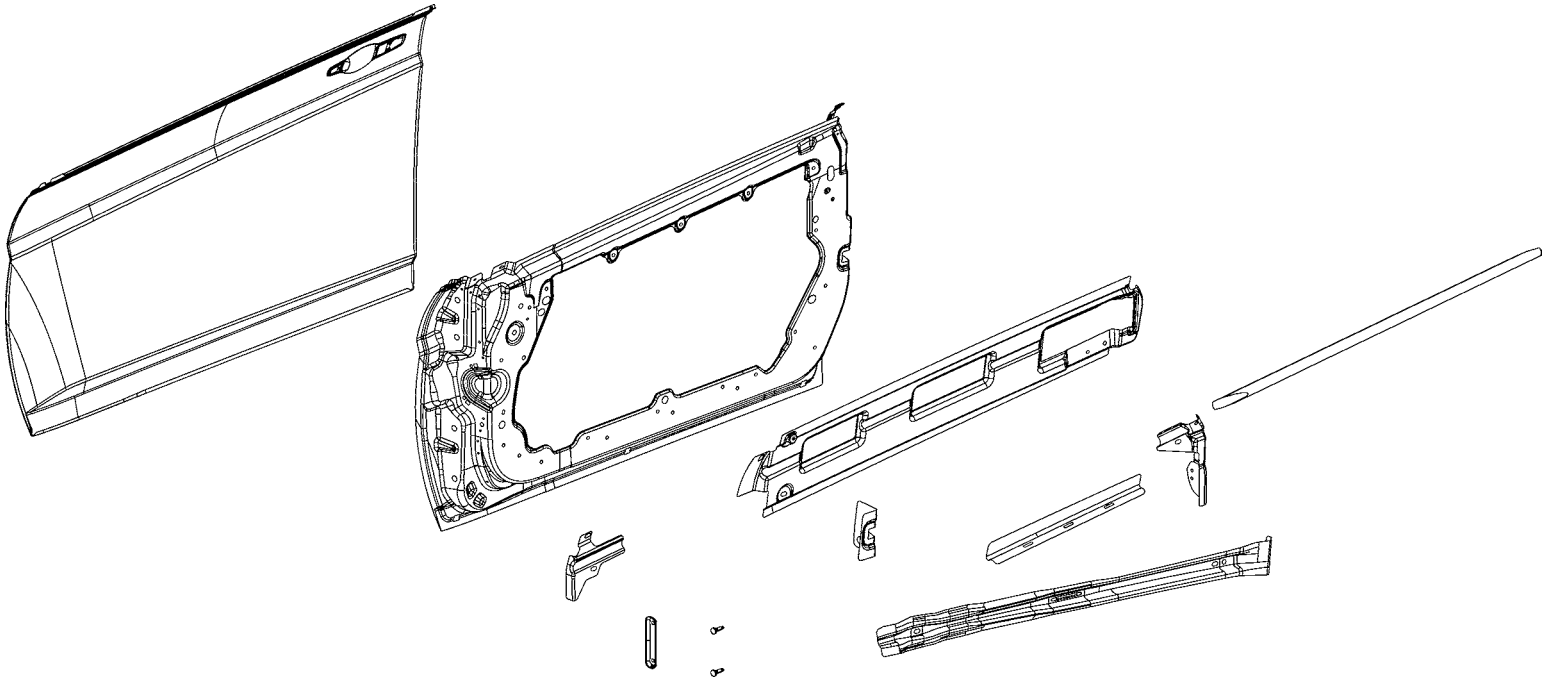

AA 05008860AA/05008861AA – PANEL FRT DOOR INR RT/LT
AB 05008866AA/05008867AA – BEAM – IMPACT FRT DOOR UPR RT/LT
AC REINF – FRT DOOR LATCH RT –
AC REINF – FRT DOOR LATCH LT –
AD BRACKET – IMPACT BEAM FRT DOOR RR RT –
AD BRACKET – IMPACT BEAM FRT DOOR RR LT –
AE STUD PLATE ASSY – FRT DOOR TO HINGE – RT
AE STUD PLATE ASSY – FRT DOOR TO HINGE – LT
AF BRACKET – IMPACT BEAM FRT DOOR FRT RT –
AF BRACKET – IMPACT BEAM FRT DOOR FRT LT –
AG STUD PLATE – DOOR HINGE MTG STUD –
AG STUD PLATE – DOOR HINGE MTG STUD –
AH 04389832AA/04389833AA – REINF – FRT DOOR OTR RT/LT
AJ REINF – FRT DOOR INR BELT RT –
AJ REINF – FRT DOOR INR BELT LT –
AK 05008862AA – PANEL – FRT DOOR OUTER
AL REINF – FRT DOOR INR BELT RT –
AL REINF – FRT DOOR INR BELT LT –

Back to Index

PARTS IDENTIFICATION LEGEND, OVERVIEW 41

AA 05008860AA/05008861AA – PANEL FRT DOOR INR RT/LT
AB 05008866AA/05008867AA – BEAM – IMPACT FRT DOOR UPR RT/LT
AC REINF – FRT DOOR LATCH RT –
AC REINF – FRT DOOR LATCH LT –
AD BRACKET – IMPACT BEAM FRT DOOR RR RT –
AD BRACKET – IMPACT BEAM FRT DOOR RR LT –
AE STUD PLATE ASSY – FRT DOOR TO HINGE – RT
AE STUD PLATE ASSY – FRT DOOR TO HINGE – LT
AF BRACKET – IMPACT BEAM FRT DOOR FRT RT –
AF BRACKET – IMPACT BEAM FRT DOOR FRT LT –
AG STUD PLATE – DOOR HINGE MTG STUD –
AG STUD PLATE – DOOR HINGE MTG STUD –
AH 04389832AA/04389833AA – REINF – FRT DOOR OTR RT/LT
AJ REINF – FRT DOOR INR BELT RT –
AJ REINF – FRT DOOR INR BELT LT –
AK 05008862AA – PANEL – FRT DOOR OUTER
AL REINF – FRT DOOR INR BELT RT –
AL REINF – FRT DOOR INR BELT LT –

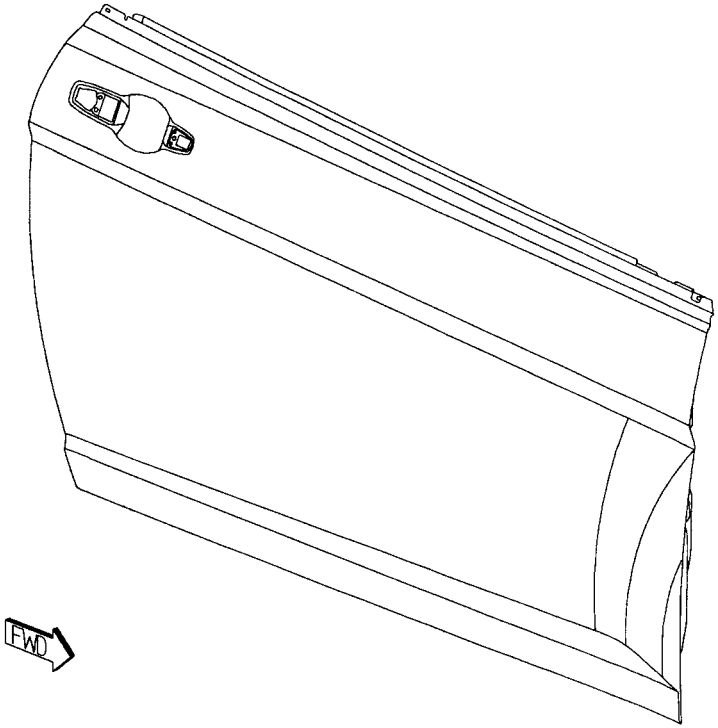

Back to Index

WELD LAYOUT LOCATION GUIDE

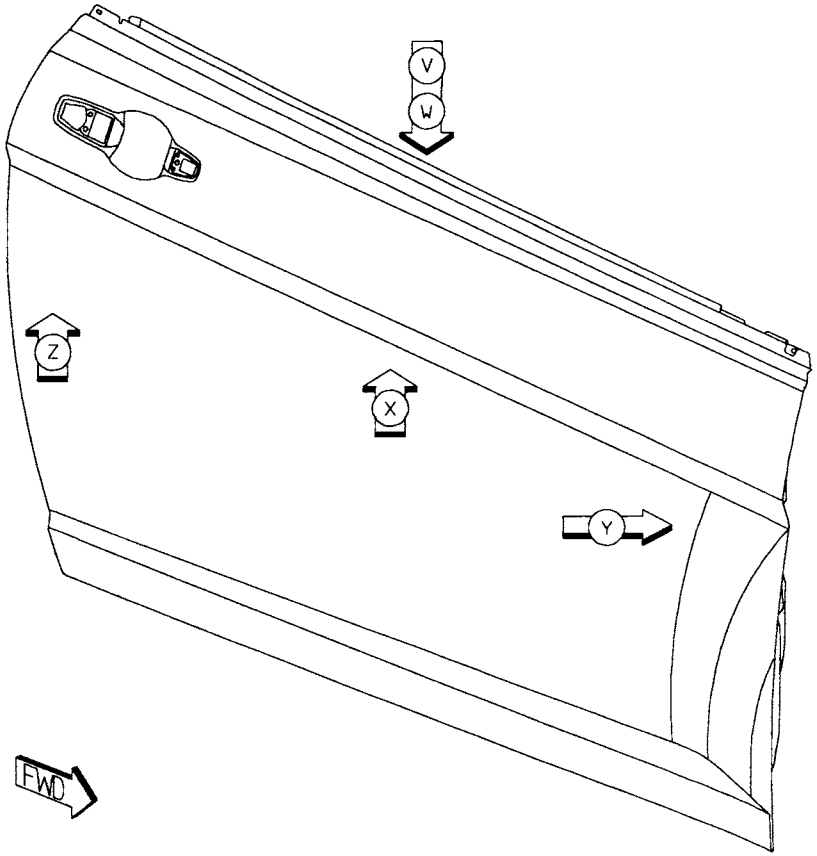

Back to Index

01 AD TO AA 15/SD S/WELDS (ORD)
02 AC TO AA 6/SD S/WELDS (ORD)
03 AB TO AA 8/SD S/WELDS (ORD)
04 AF TO AA 4/SD S/WELDS (ORD)
05 AE TO AA 2/SD S/WELDS (ORD)
06 AG TO AA 2/SD S/WELDS (ORD)

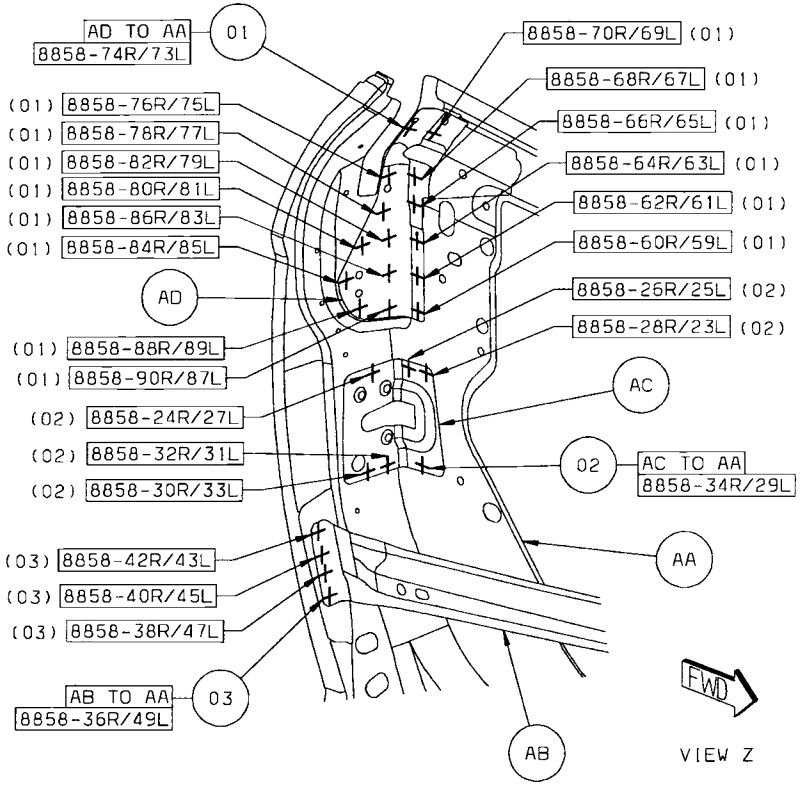

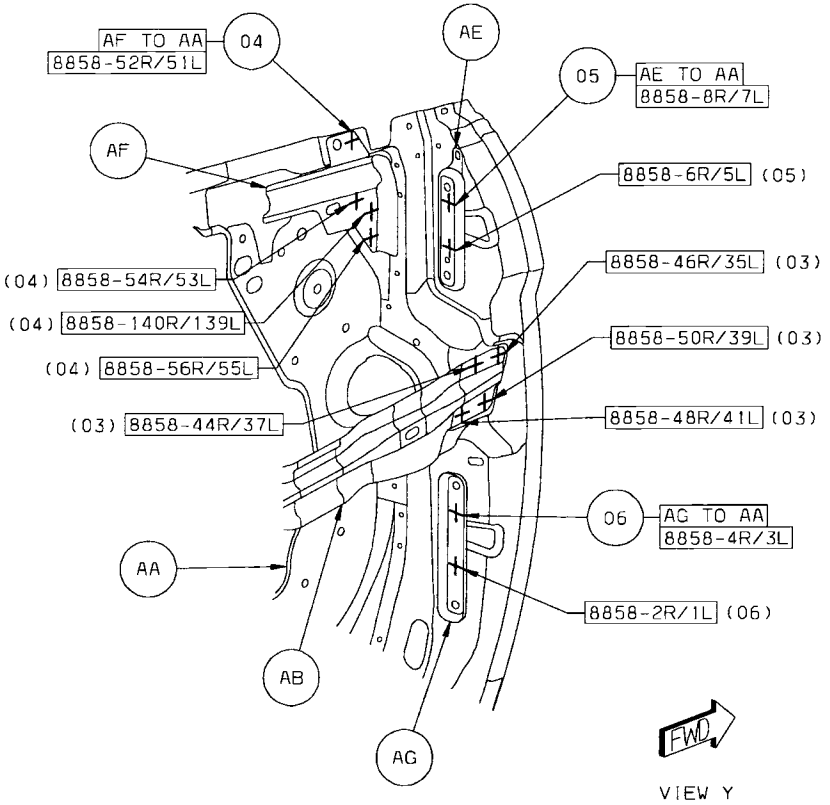

Back to Index

07 AH TO AA 7/SD S/WELDS (ORD)
08 AJ TO AA 6/SD S/WELDS (ORD)

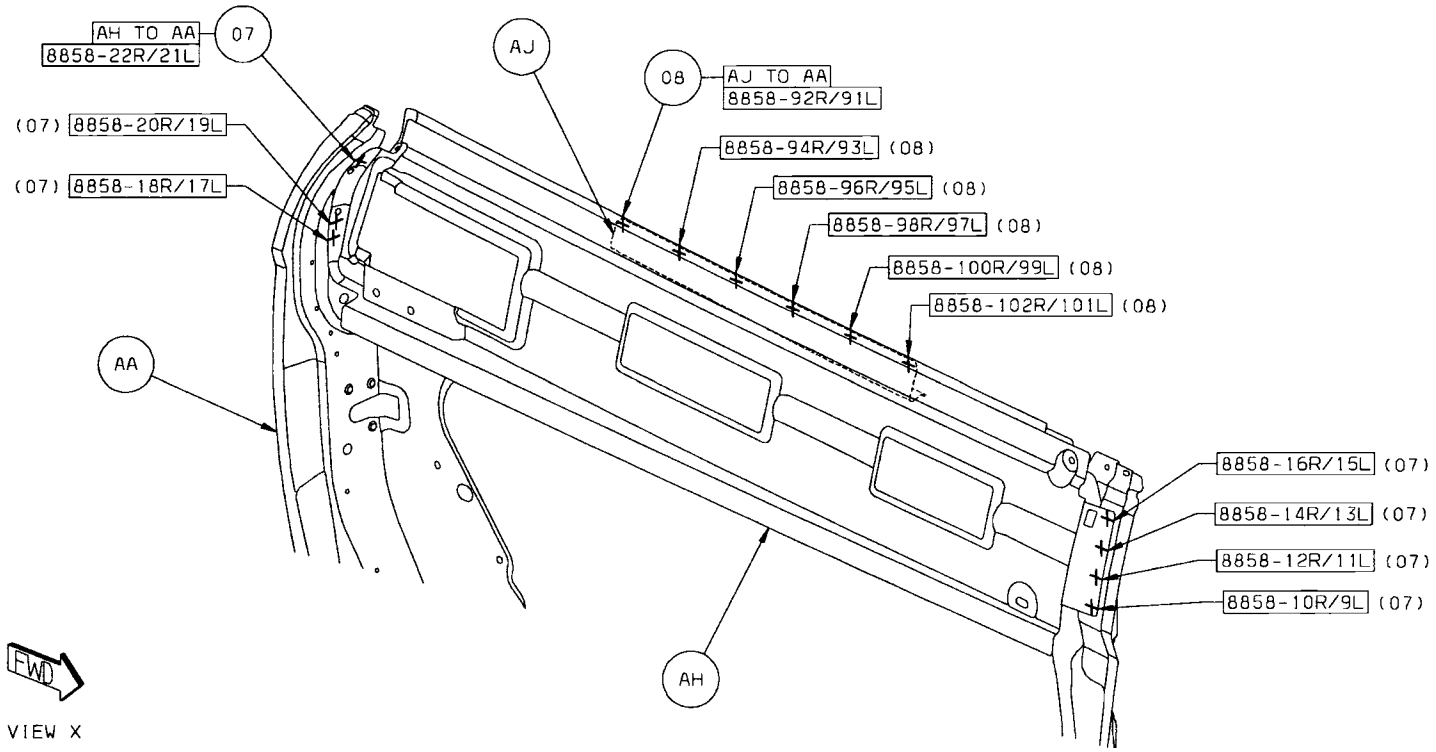

Back to Index

09 AH TO AK 1/SD STRUC ADH
10 AH TO AK 8/SD STRUC ADH
11 AB TO AK 6/SD STRUC ADH

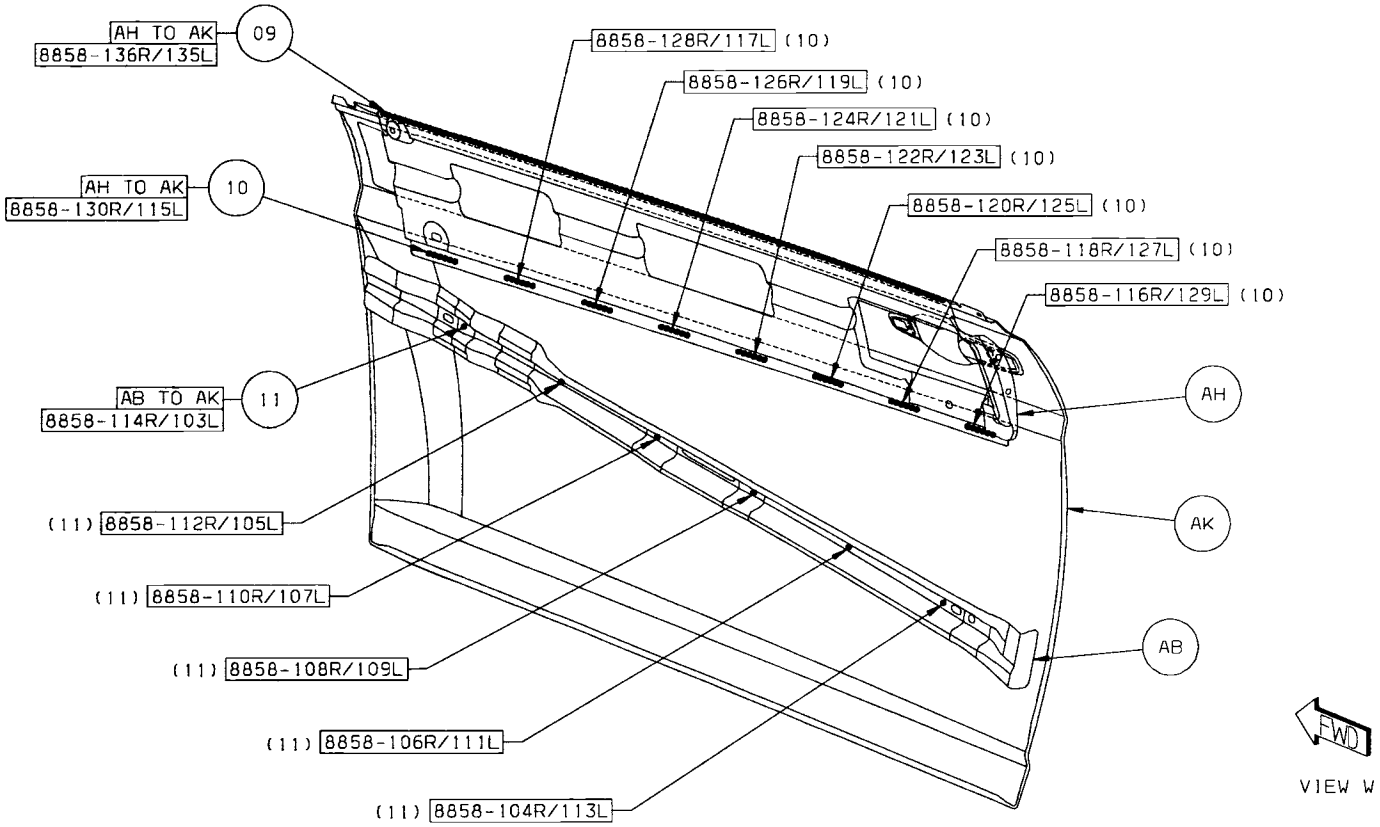

Back to Index

12 AK TO AA 1/SD S/WELDS (ORD)
13 AL TO AA 1/SD STRUC ADH
14 AL TO AA 1/SD STRUC ADH
15 AK TO AA 1/SD STRUC ADH

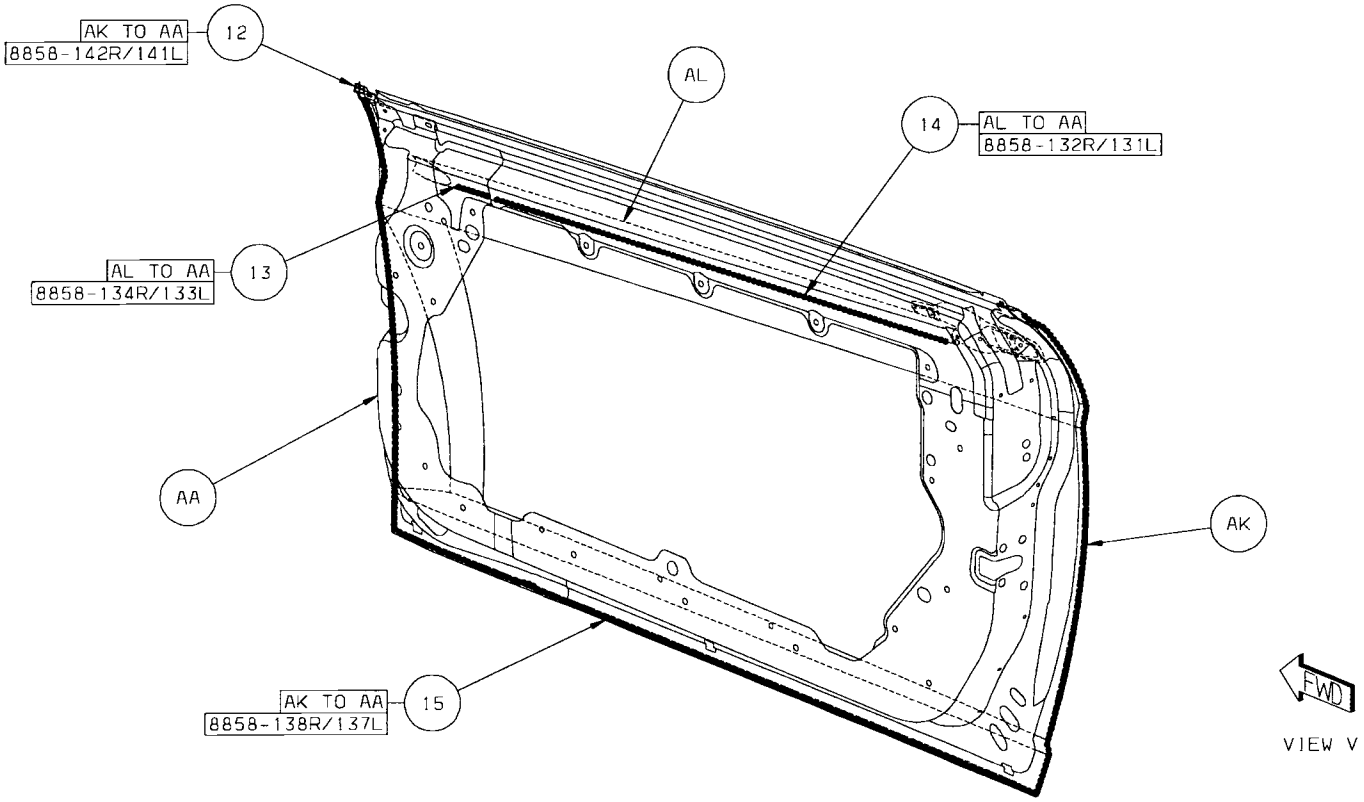

Back to Index

CHRYSLER SEBRING FRONT DOOR SECTION

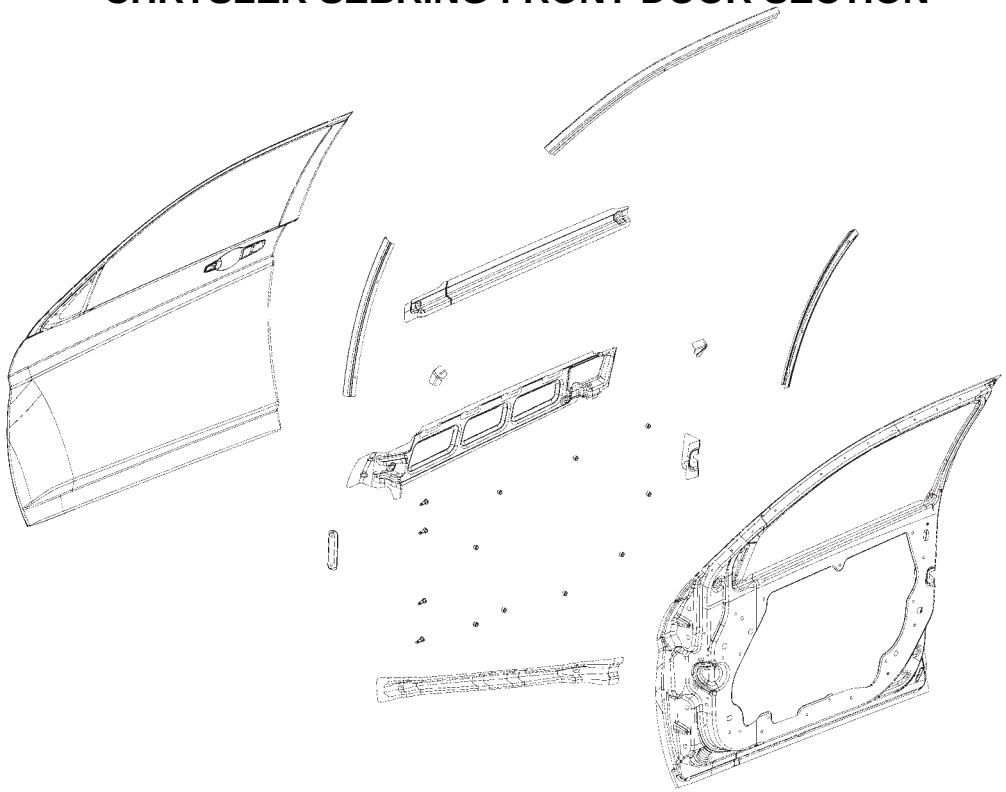

AA PANEL – FRT DOOR INR RT –
AA PANEL – FRT DOOR INR LT –
AB BEAM – FRT DOOR IMPACT BAR FRT RT –
AB BEAM – FRT DOOR IMPACT BAR FRT LT –
AC REINF – FRT DOOR LATCH RT –
AC REINF – FRT DOOR LATCH LT –
AD CHANNEL – FRT DOOR B-PILLAR RT –
AD CHANNEL – FRT DOOR B-PILLAR LT –
AE CHANNEL – DOOR GLASS RUN CHANNEL FRT UPR –
AE CHANNEL – DOOR GLASS RUN CHANNEL FRT UPR –
AF REINF – FRT DOOR INR RT –
AF REINF – FRT DOOR INR LT –
AG CHANNEL – FRT DOOR A-PILLAR RT –
AG CHANNEL – FRT DOOR A-PILLAR LT –
AH STUD PLATE ASSY – FRT DOOR TO HINGE –
AH STUD PLATE ASSY – FRT DOOR TO HINGE –
AJ STUD PLATE – DOOR HINGE MTG STUD –
AJ STUD PLATE – DOOR HINGE MTG STUD –
AK REINF – FRT DOOR OTR RT –
AK REINF – FRT DOOR OTR LT –
AL PANEL – FRT DOOR OTR RT –
AL PANEL – FRT DOOR OTR LT –

Back to Index

PARTS IDENTIFICATION LEGEND, OVERVIEW 42

AA PANEL – FRT DOOR INR RT –
AA PANEL – FRT DOOR INR LT –
AB BEAM – FRT DOOR IMPACT BAR FRT RT –
AB BEAM – FRT DOOR IMPACT BAR FRT LT –
AC REINF – FRT DOOR LATCH RT –
AC REINF – FRT DOOR LATCH LT –
AD CHANNEL – FRT DOOR B-PILLAR RT –
AD CHANNEL – FRT DOOR B-PILLAR LT –
AE CHANNEL – DOOR GLASS RUN CHANNEL FRT UPR –
AE CHANNEL – DOOR GLASS RUN CHANNEL FRT UPR –
AF REINF – FRT DOOR INR RT –
AF REINF – FRT DOOR INR LT –
AG CHANNEL – FRT DOOR A-PILLAR RT –
AG CHANNEL – FRT DOOR A-PILLAR LT –
AH STUD PLATE ASSY – FRT DOOR TO HINGE –
AH STUD PLATE ASSY – FRT DOOR TO HINGE –
AJ STUD PLATE – DOOR HINGE MTG STUD –
AJ STUD PLATE – DOOR HINGE MTG STUD –
AK REINF – FRT DOOR OTR RT –
AK REINF – FRT DOOR OTR LT –
AL PANEL – FRT DOOR OTR RT –
AL PANEL – FRT DOOR OTR LT –

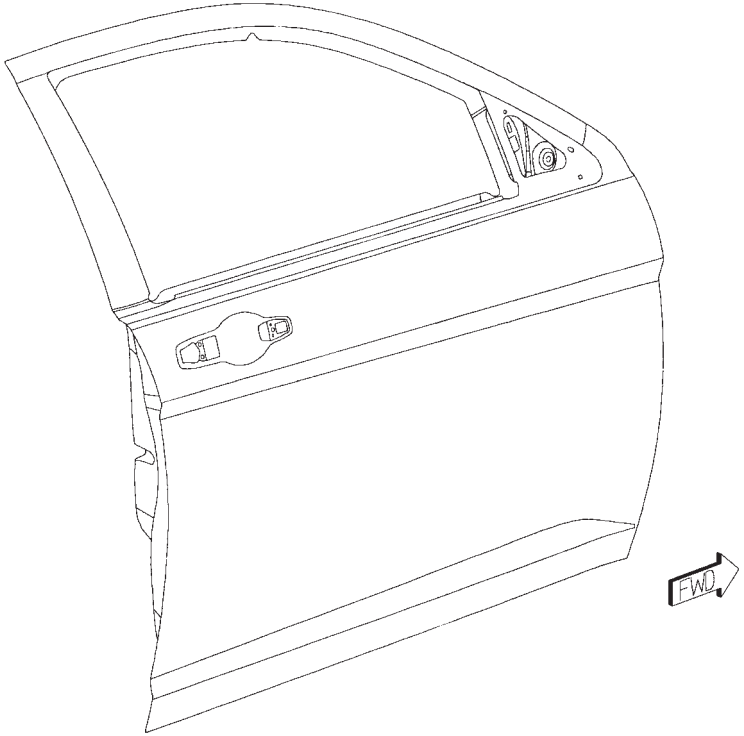

Back to Index

WELD LAYOUT LOCATION GUIDE

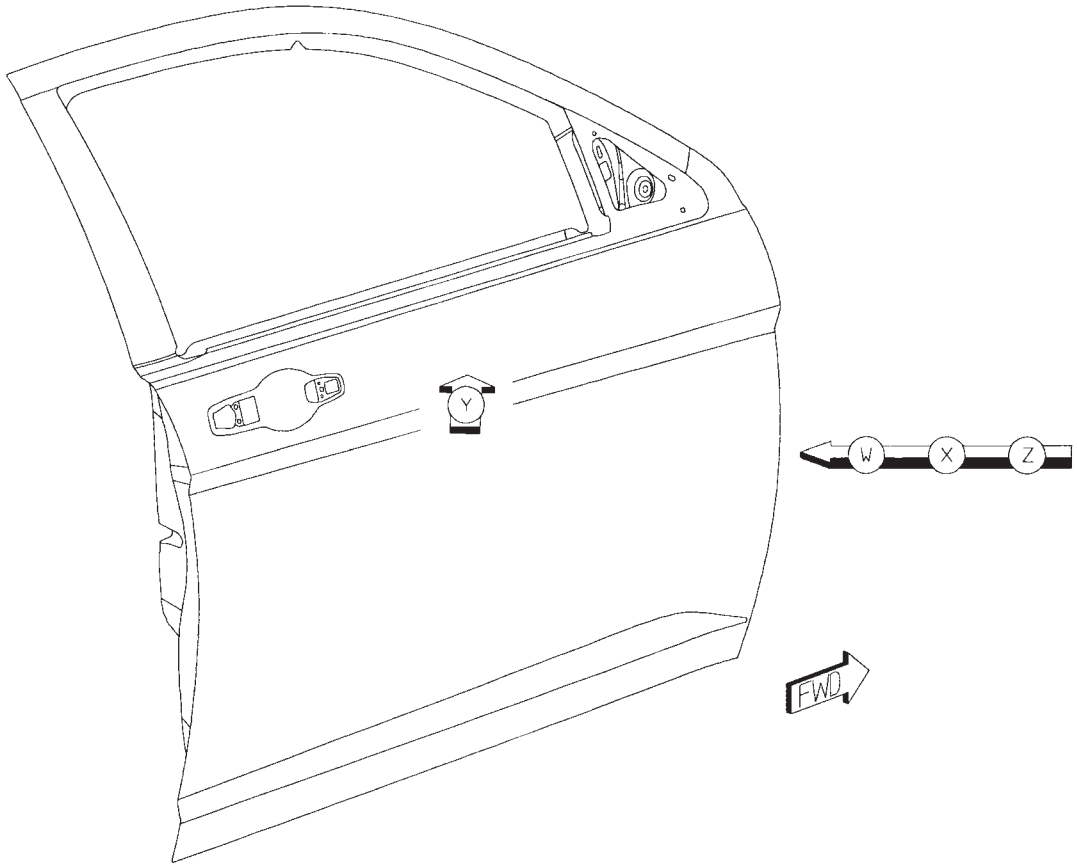

Back to Index

01 AC TO AA 6/SD S/WELDS (CRT)
02 AC TO AA 5/SD S/WELDS (ORD)
03 AD TO AA 12/SD S/WELDS (ORD)
04 AB TO AA 8/SD S/WELDS (SAF)

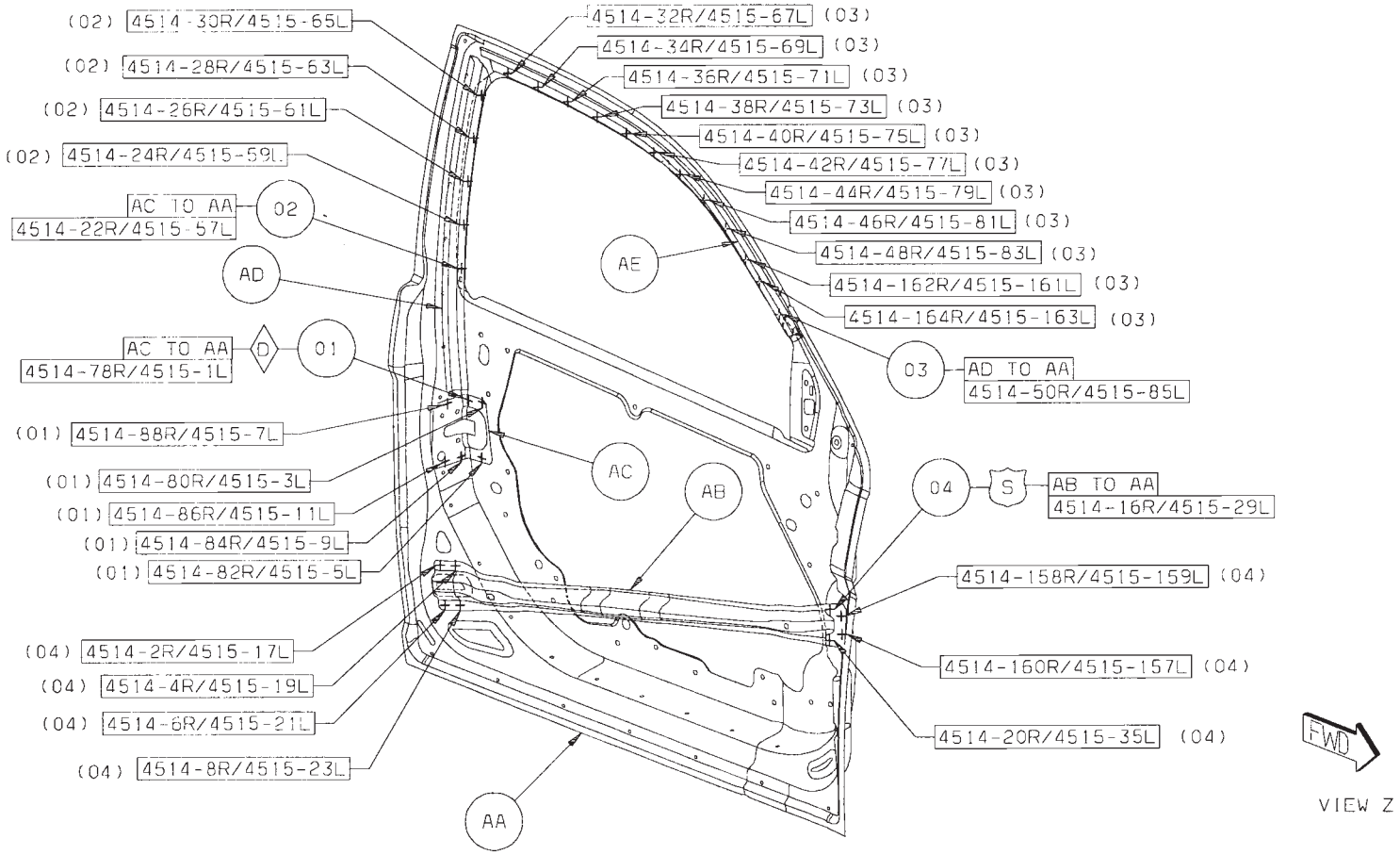

Back to Index

05 AF TO AA 20/SD S/WELDS (ORD)
06 AG TO AA 3/SD S/WELDS (ORD)
07 AH TO AA 2/SD S/WELDS (CRT)
08 AJ TO AA 2/SD S/WELDS (CRT)

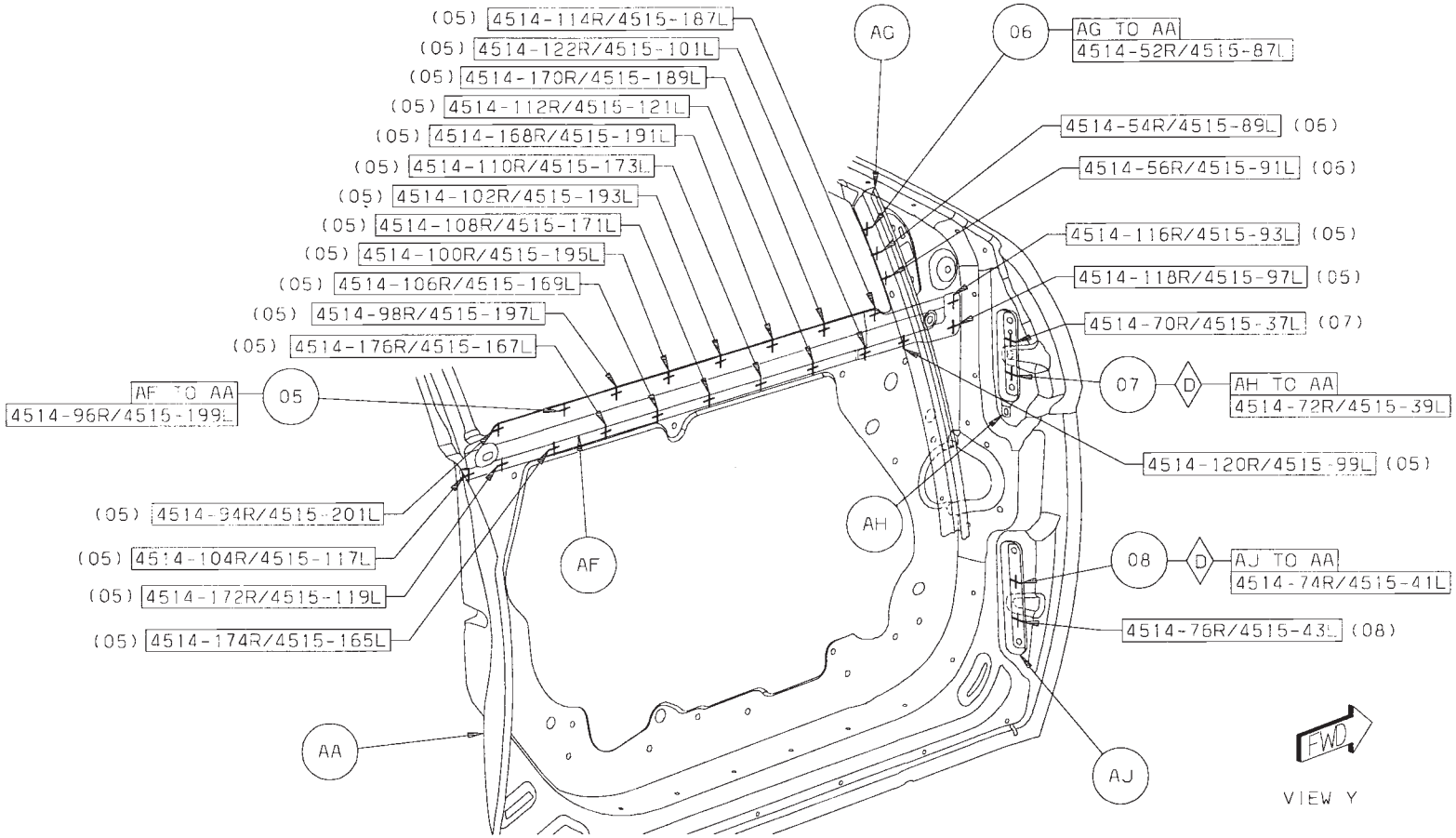

Back to Index

09 AK TO AA 6/SD S/WELDS (ORD)

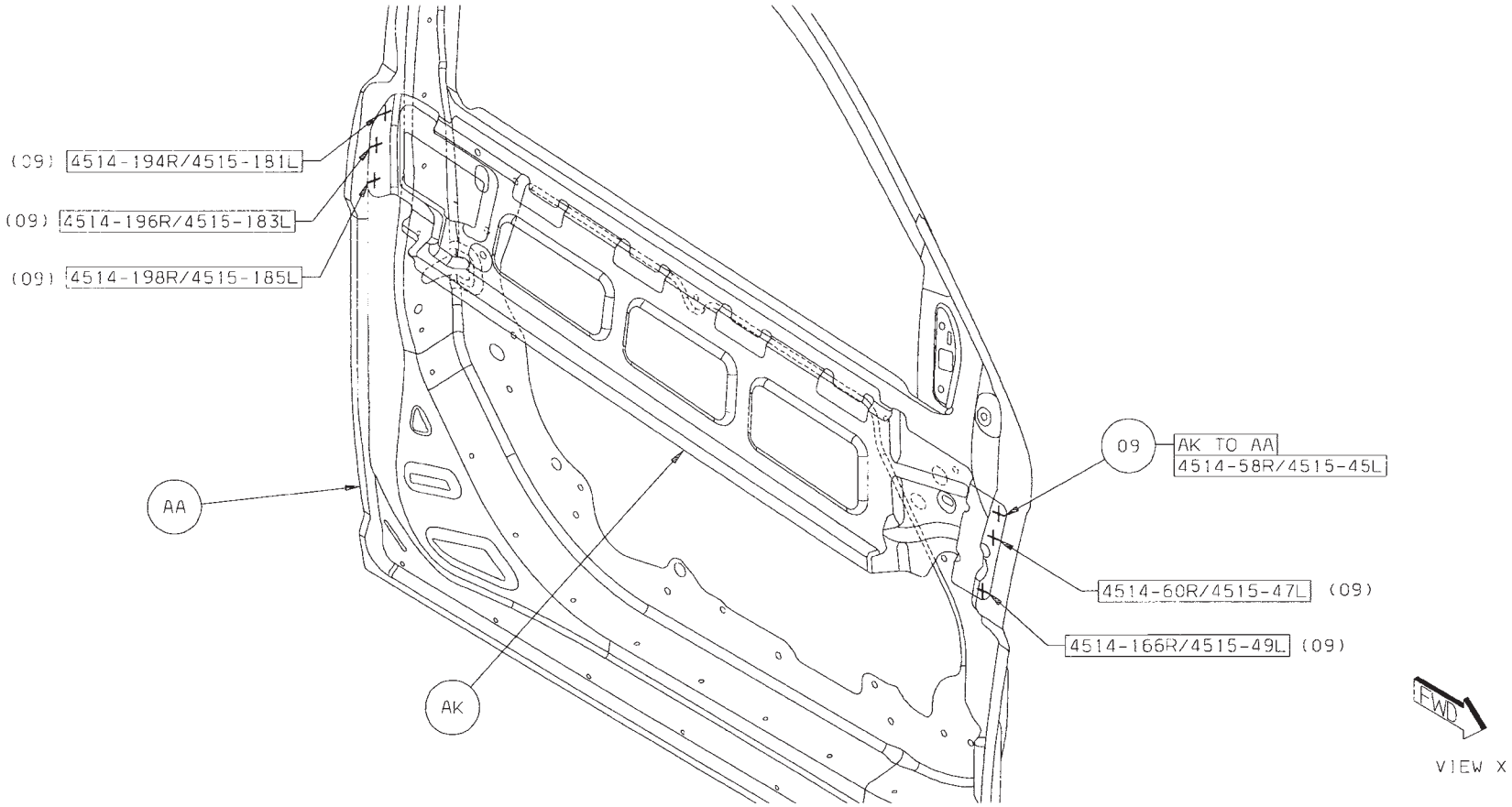

Back to Index

10 AB TO AL 4/SD STRUC ADH
11 AK TO AL 6/SD STRUC ADH
12 AK TO AL 1/SD STRUC ADH
13 AD TO AL 1/SD STRUC ADH
14 AE TO AL 1/SD STRUC ADH
15 AG TO AL 1/SD STRUC ADH
16 AA TO AL 1/SD STRUC ADH

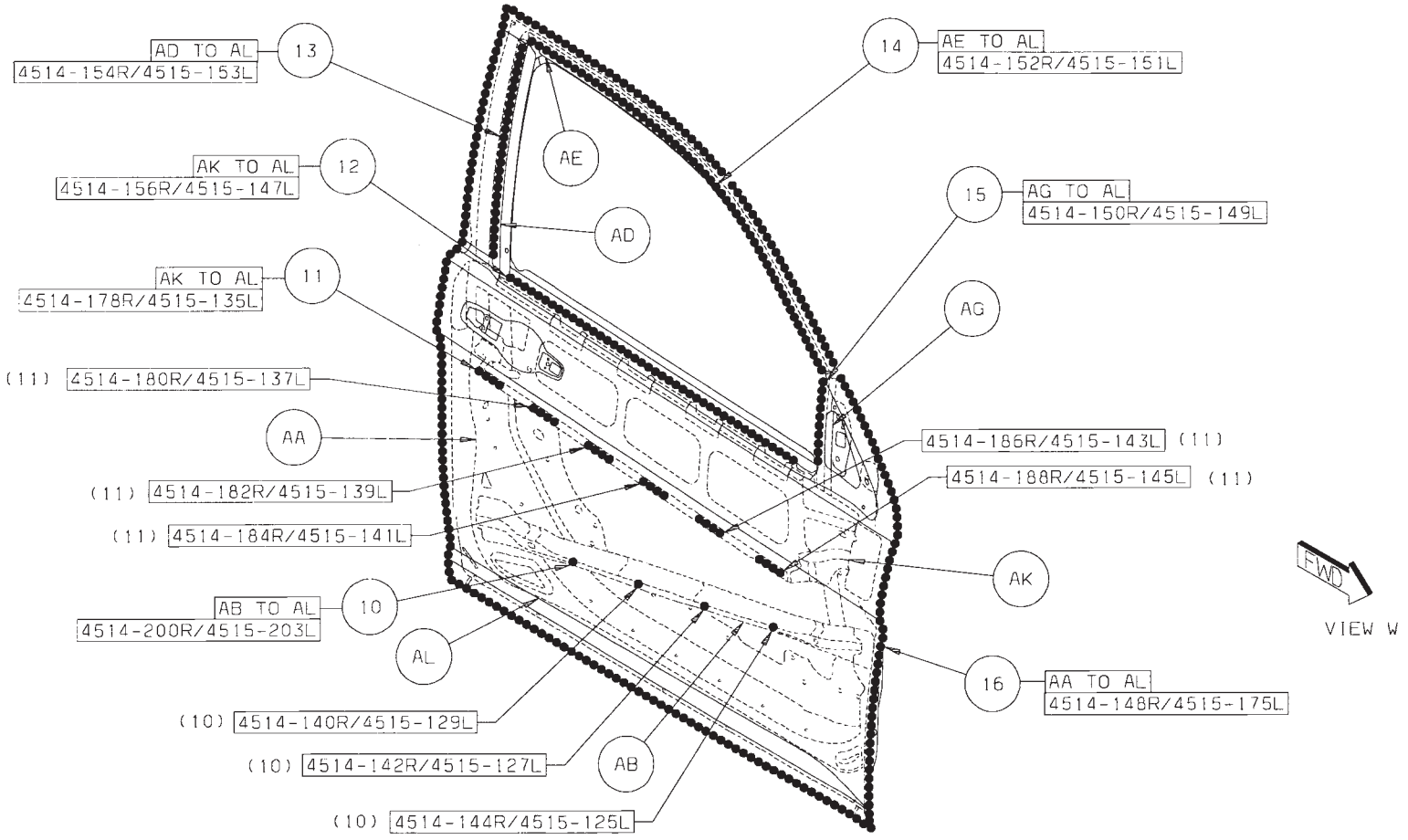

Back to Index

CHRYSLER SEBRING FRONT FLOOR SECTION

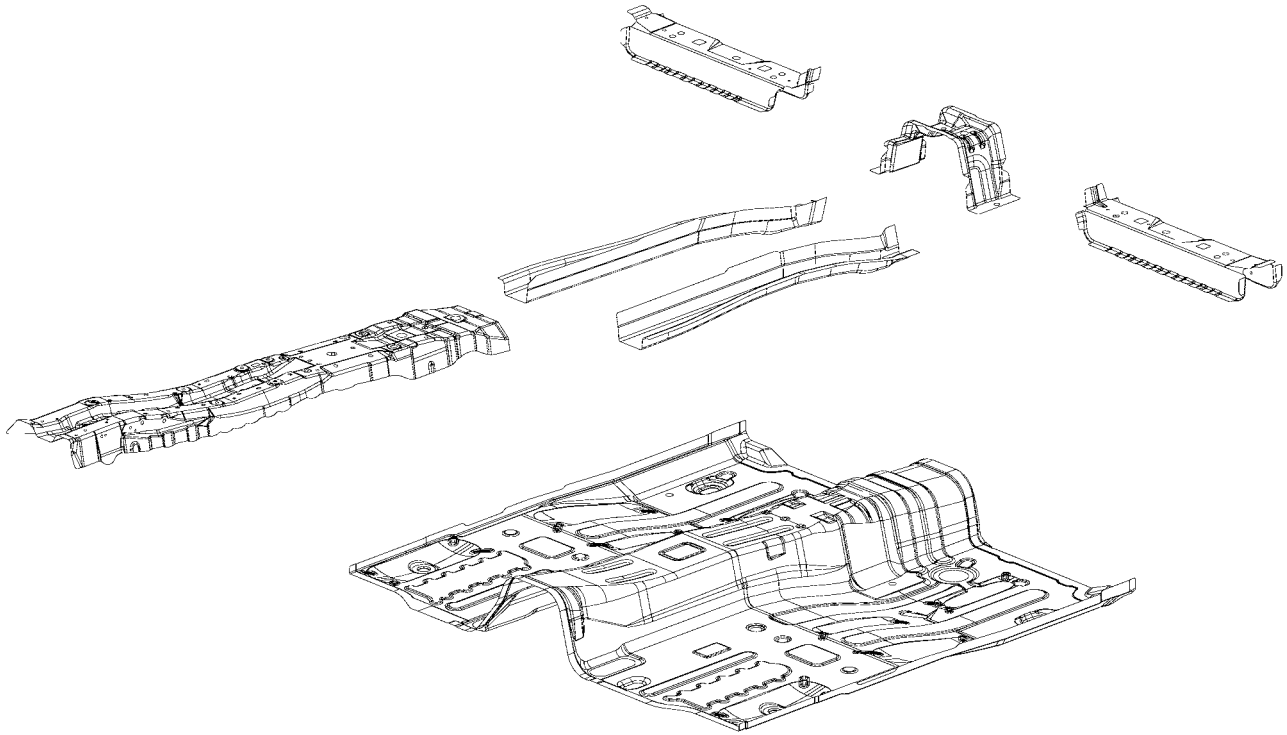

AA PAN – FRT FLOOR –
AB REINF – TUNNEL –
AC RAIL – TUNNEL FRT RT –
AC RAIL – TUNNEL FRT LT –
AD CROSSMEMBER – FRT FLOOR PAN FRT RT –
AD CROSSMEMBER – FRT FLOOR PAN FRT LT –
AE CROSSMEMBER – TUNNEL FRT –
AF STUD.WELD/EXTERNAL – HEADER.PT.NO.FIN.SPECIAL – SEAT TO CROSSMEMBER
AG STUD.WELD/EXTERNAL – PNT.CUTTER.PILOT.PT.SPECIAL – AIRBAG TO TUNNEL REINF
AH STUD.WELD/EXTERNAL – HEADER.PT.PNT.CUTTER.SPECIAL – FUEL/BRAKE BUNDLE TO FRT FLOOR PAN
AH STUD.WELD/EXTERNAL – HEADER.PT.PNT.CUTTER.SPECIAL – FRT TUNNEL H/SHIELD TO FRT FLR PAN
AH STUD.WELD/EXTERNAL – HEADER.PT.PNT.CUTTER.SPECIAL – RR TUNNEL H/SHIELD TO FRT FLR PAN
AH STUD.WELD/EXTERNAL – HEADER.PT.PNT.CUTTER.SPECIAL – F/TANK CLS OUT TO C/MBR FRT FLR RR

Back to Index

PARTS IDENTIFICATION LEGEND, OVERVIEW 20

AA PAN – FRT FLOOR –
AB REINF – TUNNEL –
AC RAIL – TUNNEL FRT RT –
AC RAIL – TUNNEL FRT LT –
AD CROSSMEMBER – FRT FLOOR PAN FRT RT –
AD CROSSMEMBER – FRT FLOOR PAN FRT LT –
AE CROSSMEMBER – TUNNEL FRT –
AF STUD.WELD/EXTERNAL – HEADER.PT.NO.FIN.SPECIAL – SEAT TO CROSSMEMBER
AG STUD.WELD/EXTERNAL – PNT.CUTTER.PILOT.PT.SPECIAL – AIRBAG TO TUNNEL REINF
AH STUD.WELD/EXTERNAL – HEADER.PT.PNT.CUTTER.SPECIAL – FUEL/BRAKE BUNDLE TO FRT FLOOR PAN
AH STUD.WELD/EXTERNAL – HEADER.PT.PNT.CUTTER.SPECIAL – FRT TUNNEL H/SHIELD TO FRT FLR PAN
AH STUD.WELD/EXTERNAL – HEADER.PT.PNT.CUTTER.SPECIAL – RR TUNNEL H/SHIELD TO FRT FLR PAN
AH STUD.WELD/EXTERNAL – HEADER.PT.PNT.CUTTER.SPECIAL – F/TANK CLS OUT TO C/MBR FRT FLR RR

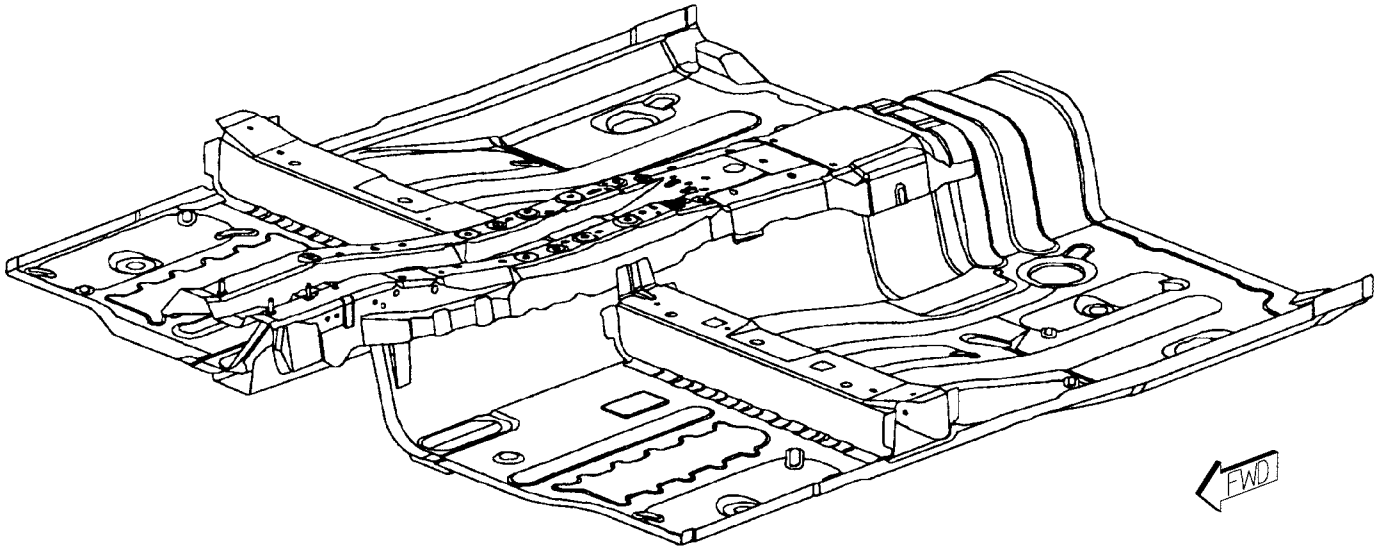

Back to Index

WELD LAYOUT LOCATION GUIDE

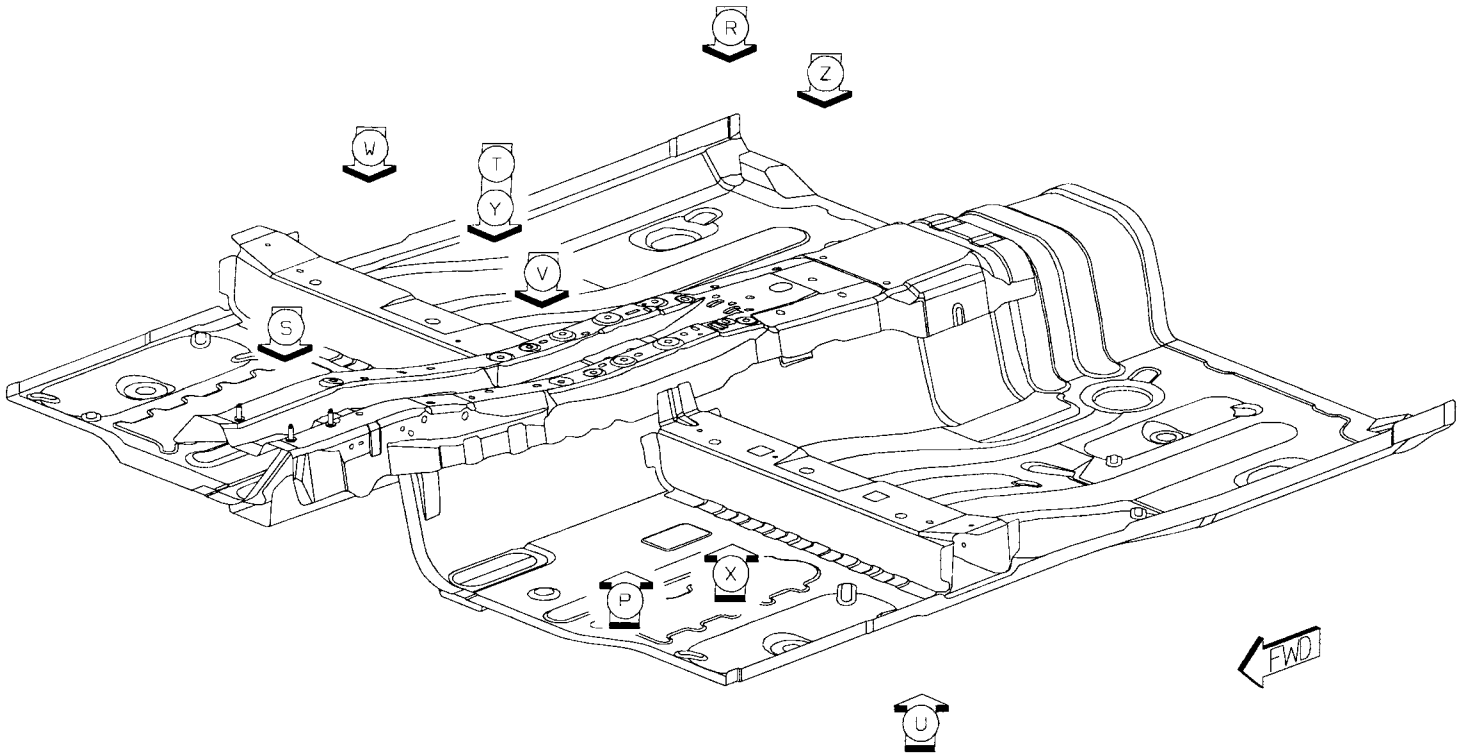

Back to Index

01 AB TO AA 45 S/WELDS (ORD)

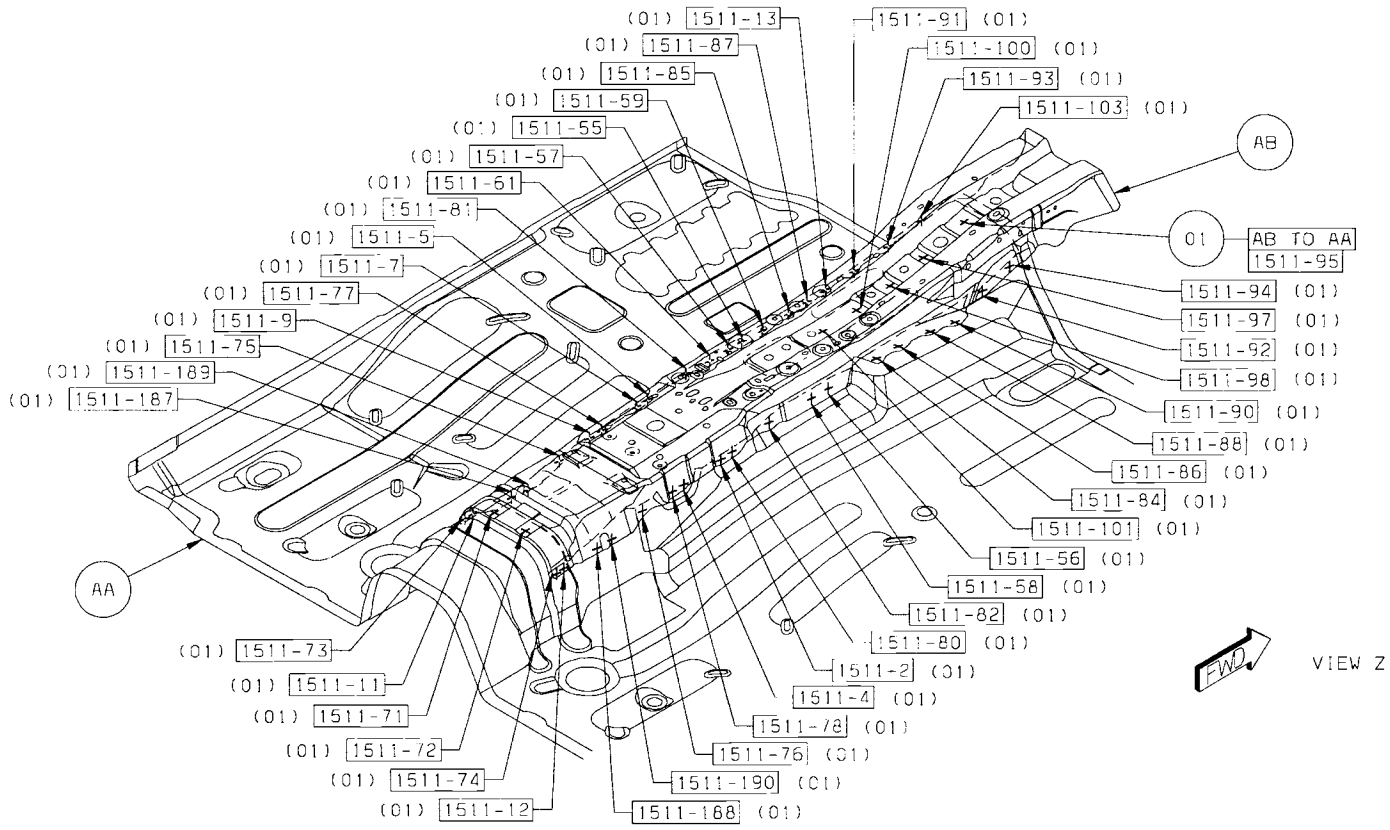

Back to Index

02 AC TO AA 31R S/WELDS (ORD)

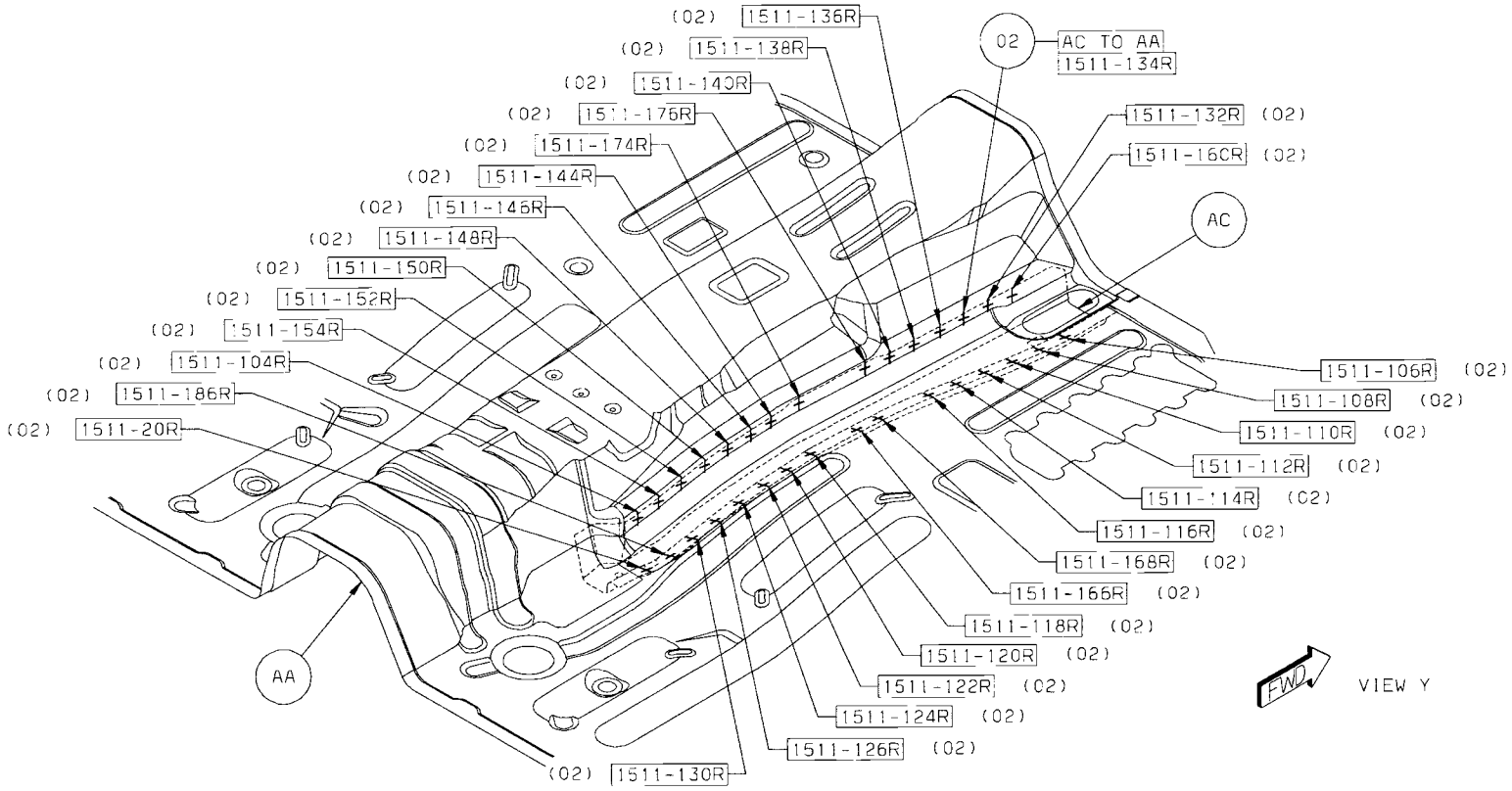

Back to Index

03 AC TO AA 30L S/WELDS (ORD)
04 AD TO AC TO AA 2L S/WELDS (ORD)

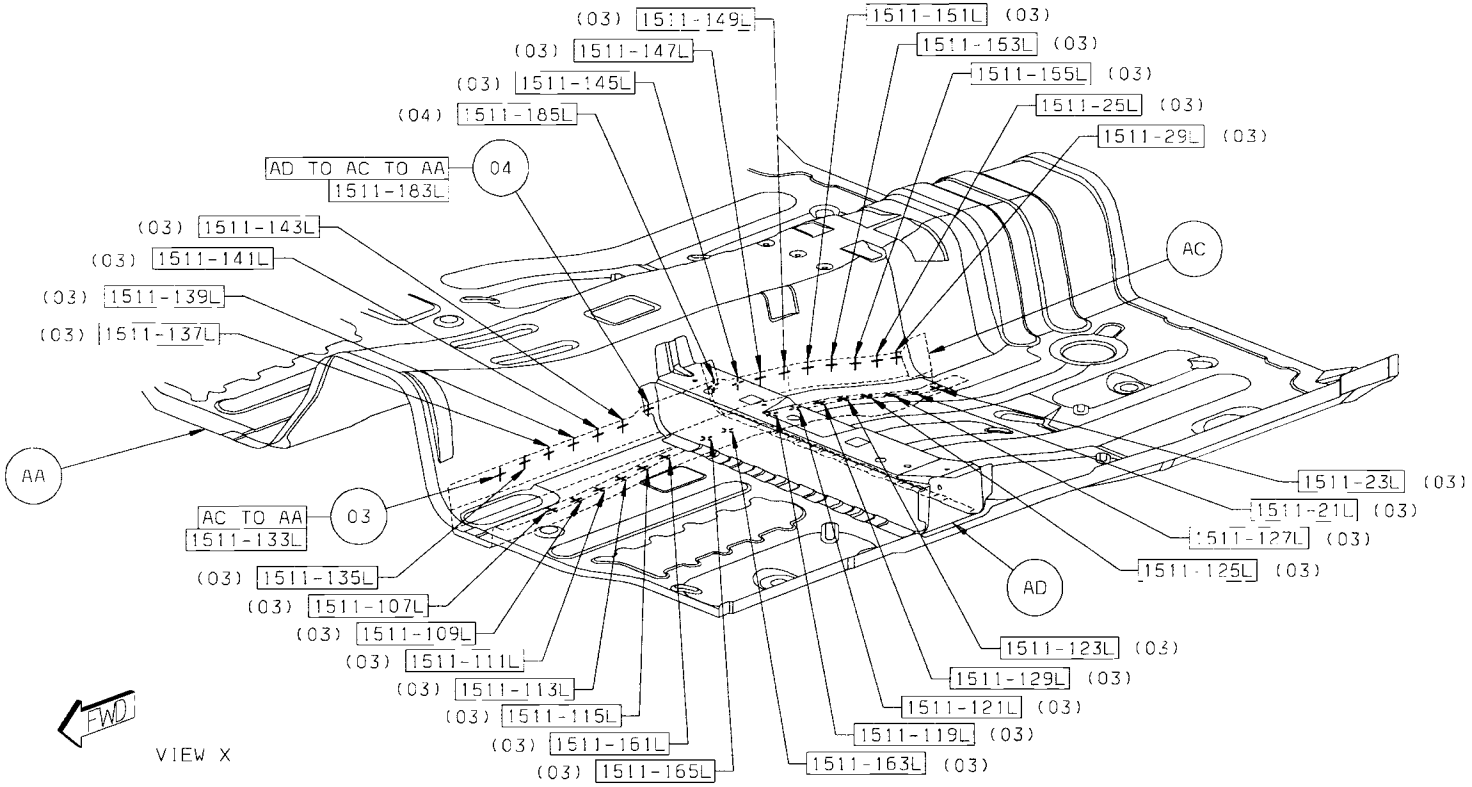

Back to Index

05 AE TO AB TO AA 4 S/WELDS (ORD)
06 AD TO AC TO AA 2R S/WELDS (ORD)
07 AD TO AA 16R S/WELDS (ORD)
08 AE TO AA 6 S/WELDS (ORD)

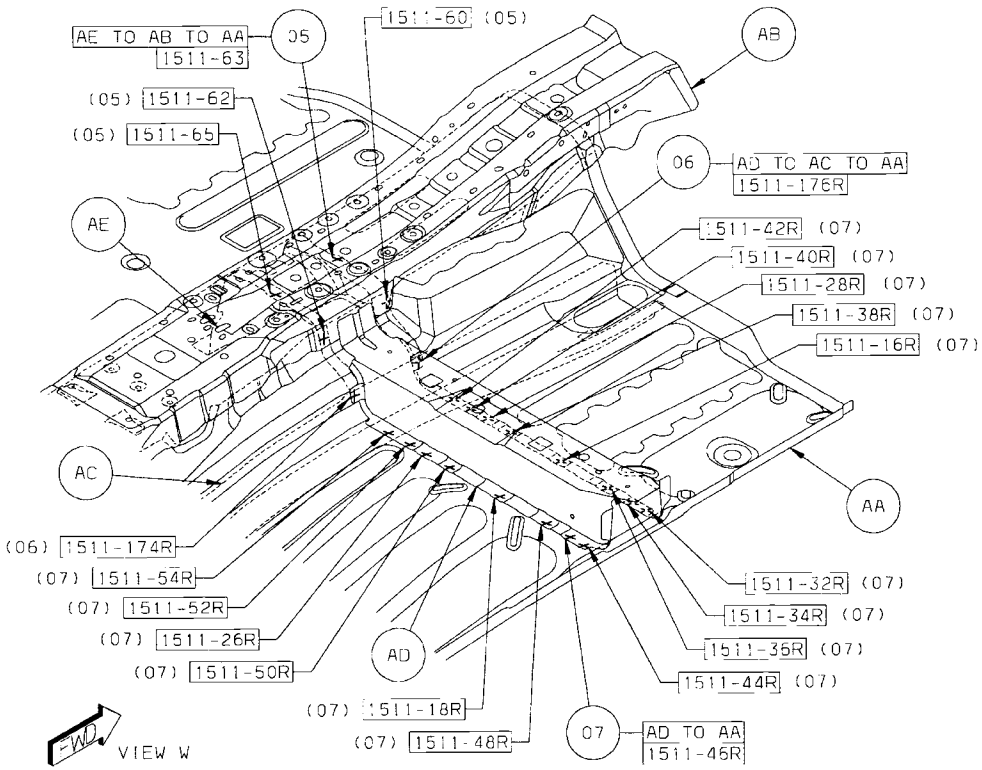

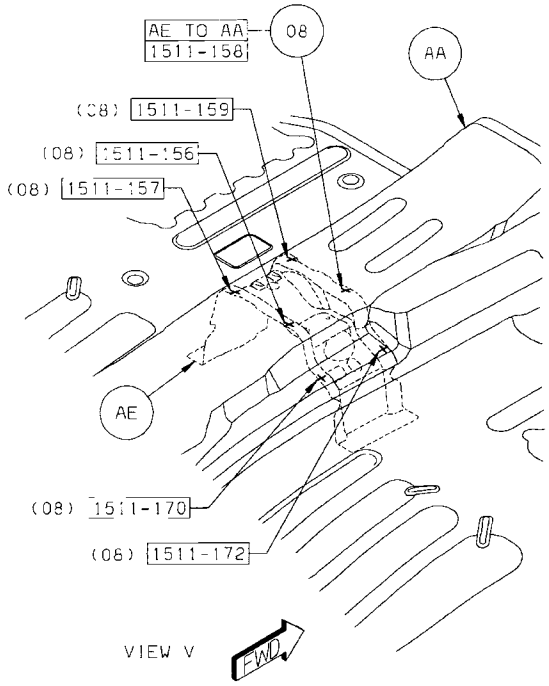

Back to Index

09 AE TO AD TO AA 2L S/WELDS (ORD)
10 AC TO AA 16L S/WELDS (ORD)
11 AF TO AC 1/SD PROJ WELD (ORD)
12 AG TO AB 3 PROJ WELDS (ORD)

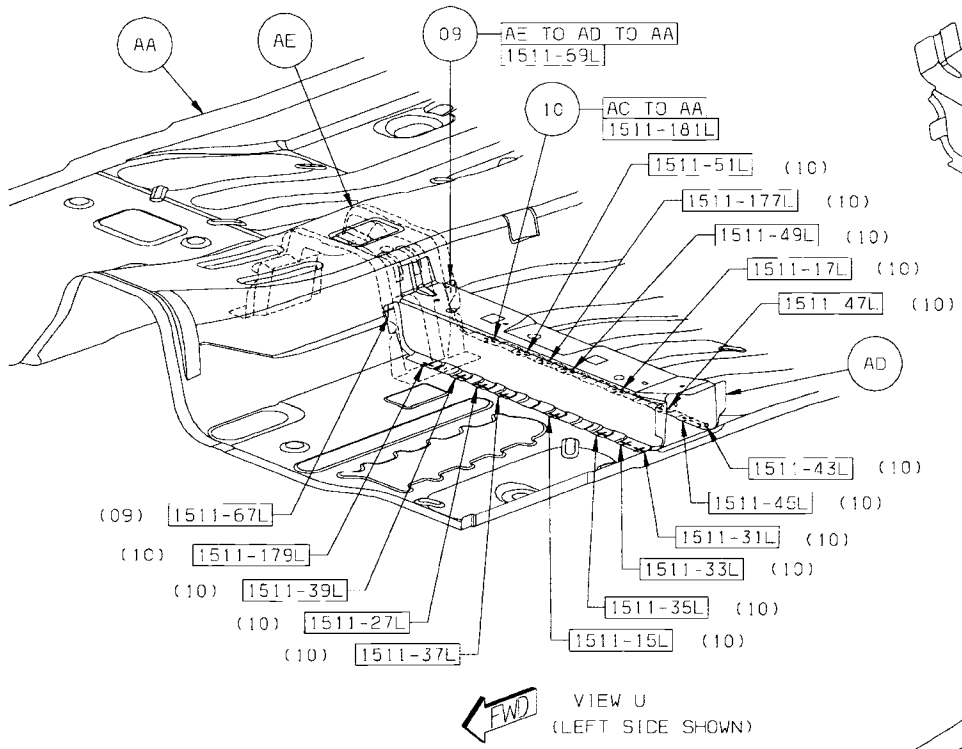

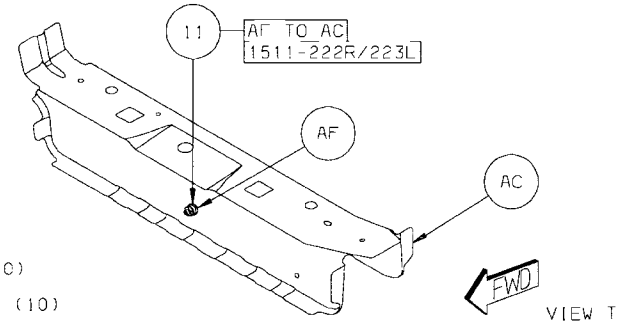

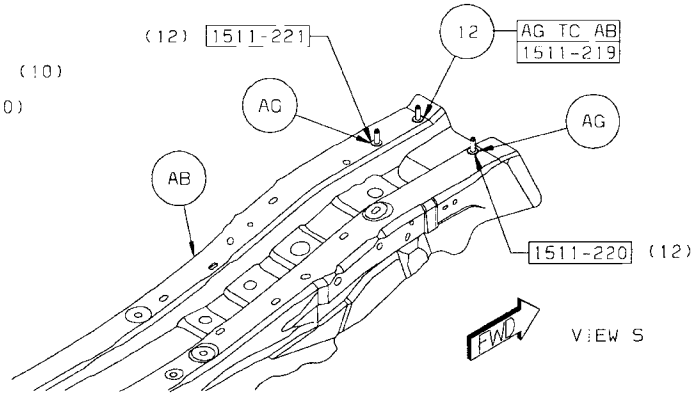

Back to Index

13 AH TO AA 9 PROJ WELDS (ORD)
14 AH TO AC 4 PROJ WELDS (ORD)

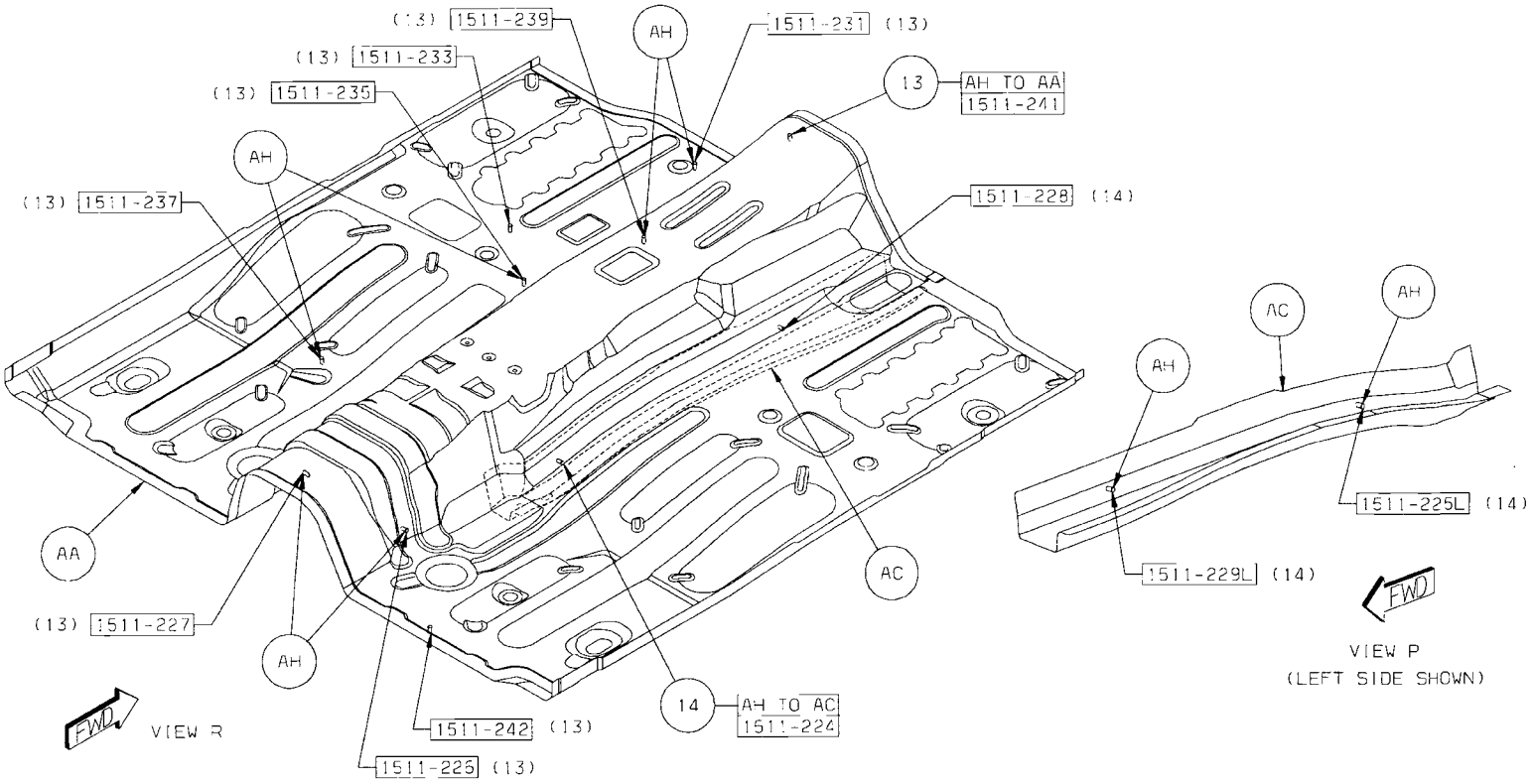

Back to Index

CHRYSLER SEBRING/DODGE AVENGER FRONT FLOOR (COMMON) SECTION

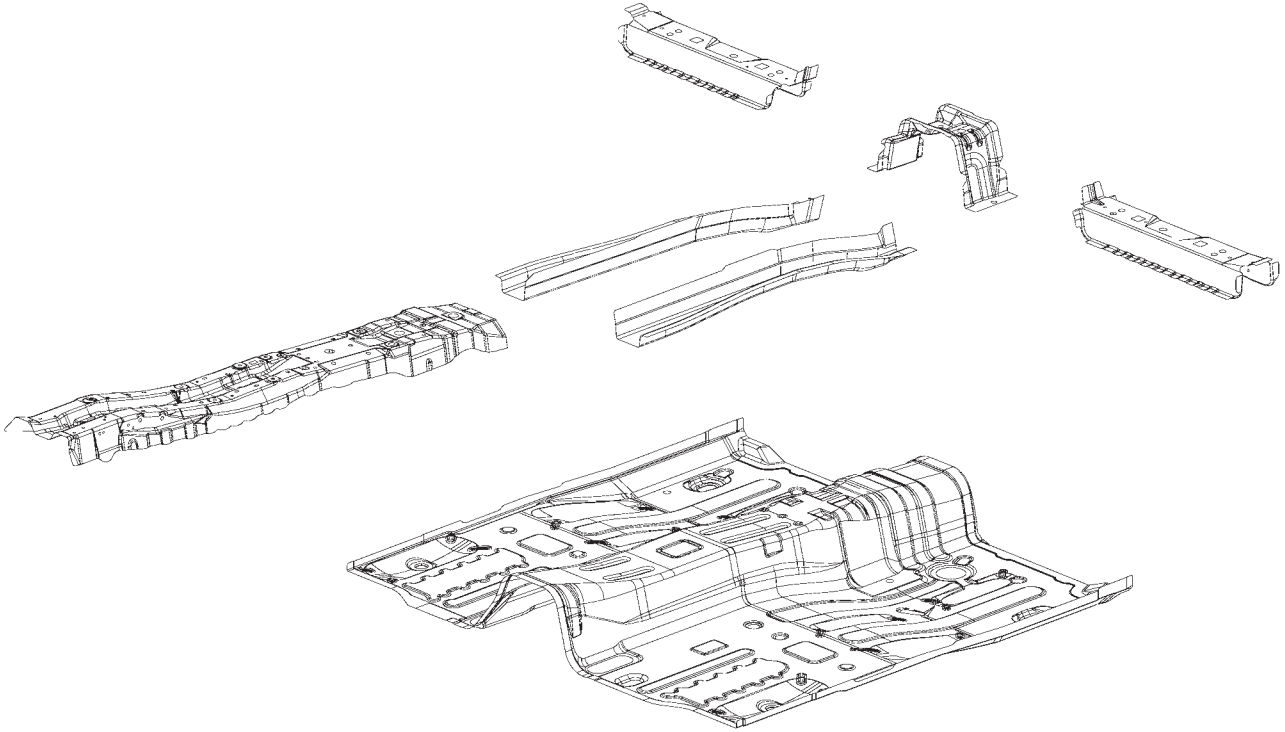

AA PAN – FRT FLOOR –
AB REINF – TUNNEL –
AC RAIL – TUNNEL FRT RT –
AC RAIL – TUNNEL FRT LT –
AD CROSSMEMBER – FRT FLOOR PAN FRT RT –
AD CROSSMEMBER – FRT FLOOR PAN FRT LT –
AE CROSSMEMBER – TUNNEL FRT –
AF STUD.WELD/EXTERNAL – HEADER.PT.NO.FIN.SPECIAL – SEAT TO CROSSMEMBER
AG STUD.WELD/EXTERNAL – PNT.CUTTER.PILOT.PT.SPECIAL – AIRBAG TO TUNNEL REINF
AH STUD.WELD/EXTERNAL – HEADER.PT.PNT.CUTTER.SPECIAL – FUEL/BRAKE BUNDLE TO FRT FLOOR PAN
AH STUD.WELD/EXTERNAL – HEADER.PT.PNT.CUTTER.SPECIAL – FRT TUNNEL H/SHIELD TO FRT FLR PAN
AH STUD.WELD/EXTERNAL – HEADER.PT.PNT.CUTTER.SPECIAL – RR TUNNEL H/SHIELD TO FRT FLR PAN
AH STUD.WELD/EXTERNAL – HEADER.PT.PNT.CUTTER.SPECIAL – F/TANK CLS OUT TO C/MBR FRT FLR RR

Back to Index

PARTS IDENTIFICATION LEGEND, OVERVIEW 20

AA PAN – FRT FLOOR –
AB REINF – TUNNEL –
AC RAIL – TUNNEL FRT RT –
AC RAIL – TUNNEL FRT LT –
AD CROSSMEMBER – FRT FLOOR PAN FRT RT –
AD CROSSMEMBER – FRT FLOOR PAN FRT LT –
AE CROSSMEMBER – TUNNEL FRT –
AF STUD.WELD/EXTERNAL – HEADER.PT.NO.FIN.SPECIAL – SEAT TO CROSSMEMBER
AG STUD.WELD/EXTERNAL – PNT.CUTTER.PILOT.PT.SPECIAL – AIRBAG TO TUNNEL REINF
AH STUD.WELD/EXTERNAL – HEADER.PT.PNT.CUTTER.SPECIAL – FUEL/BRAKE BUNDLE TO FRT FLOOR PAN
AH STUD.WELD/EXTERNAL – HEADER.PT.PNT.CUTTER.SPECIAL – FRT TUNNEL H/SHIELD TO FRT FLR PAN
AH STUD.WELD/EXTERNAL – HEADER.PT.PNT.CUTTER.SPECIAL – RR TUNNEL H/SHIELD TO FRT FLR PAN
AH STUD.WELD/EXTERNAL – HEADER.PT.PNT.CUTTER.SPECIAL – F/TANK CLS OUT TO C/MBR FRT FLR RR

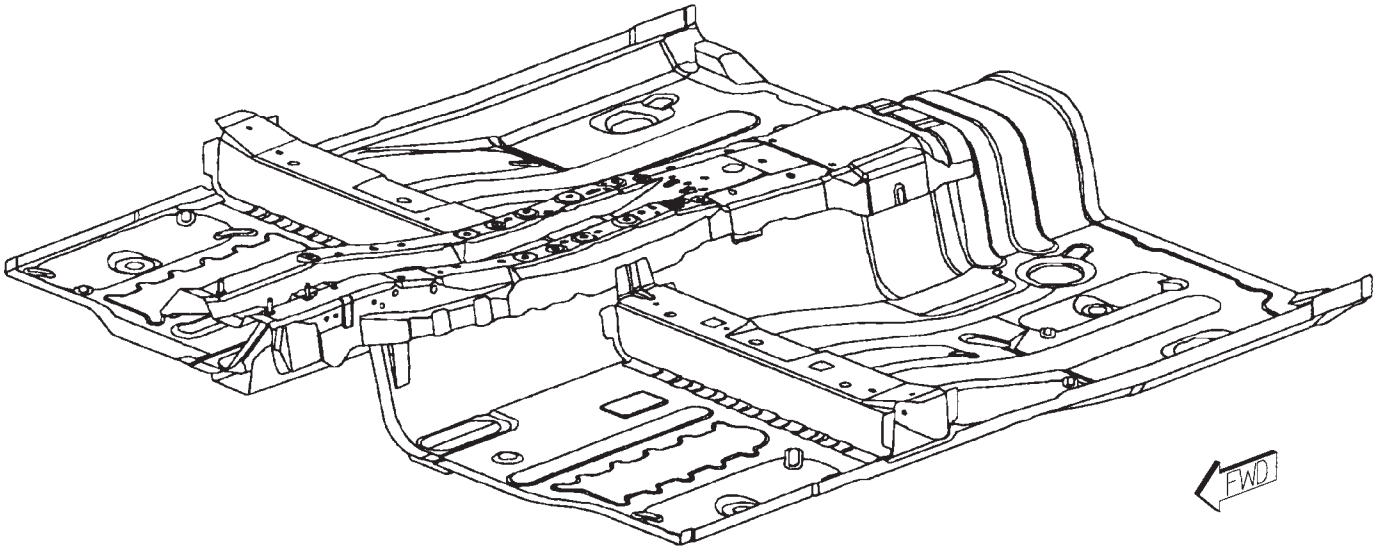

Back to Index

WELD LAYOUT LOCATION GUIDE

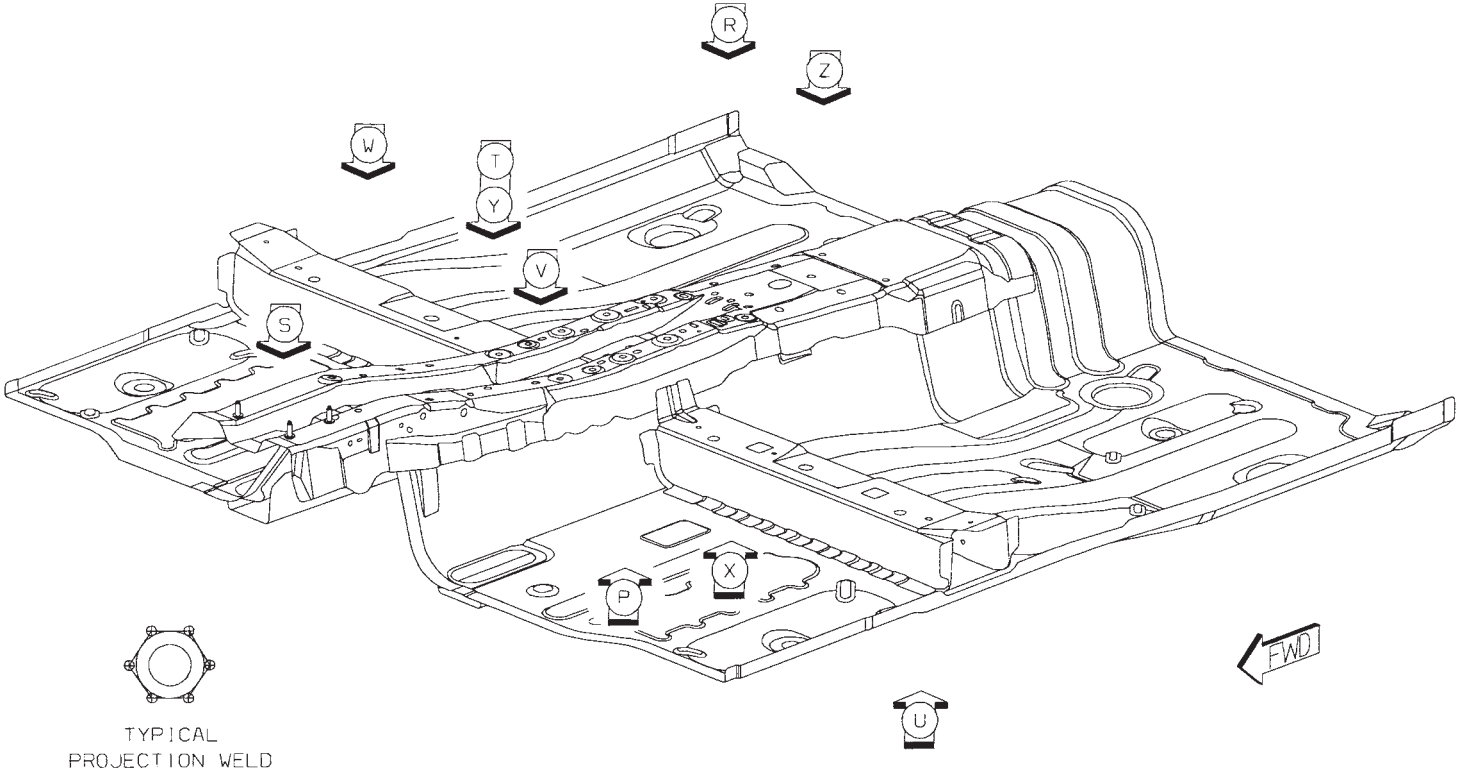

Back to Index

01 AB TO AA 45 S/WELDS (ORD)

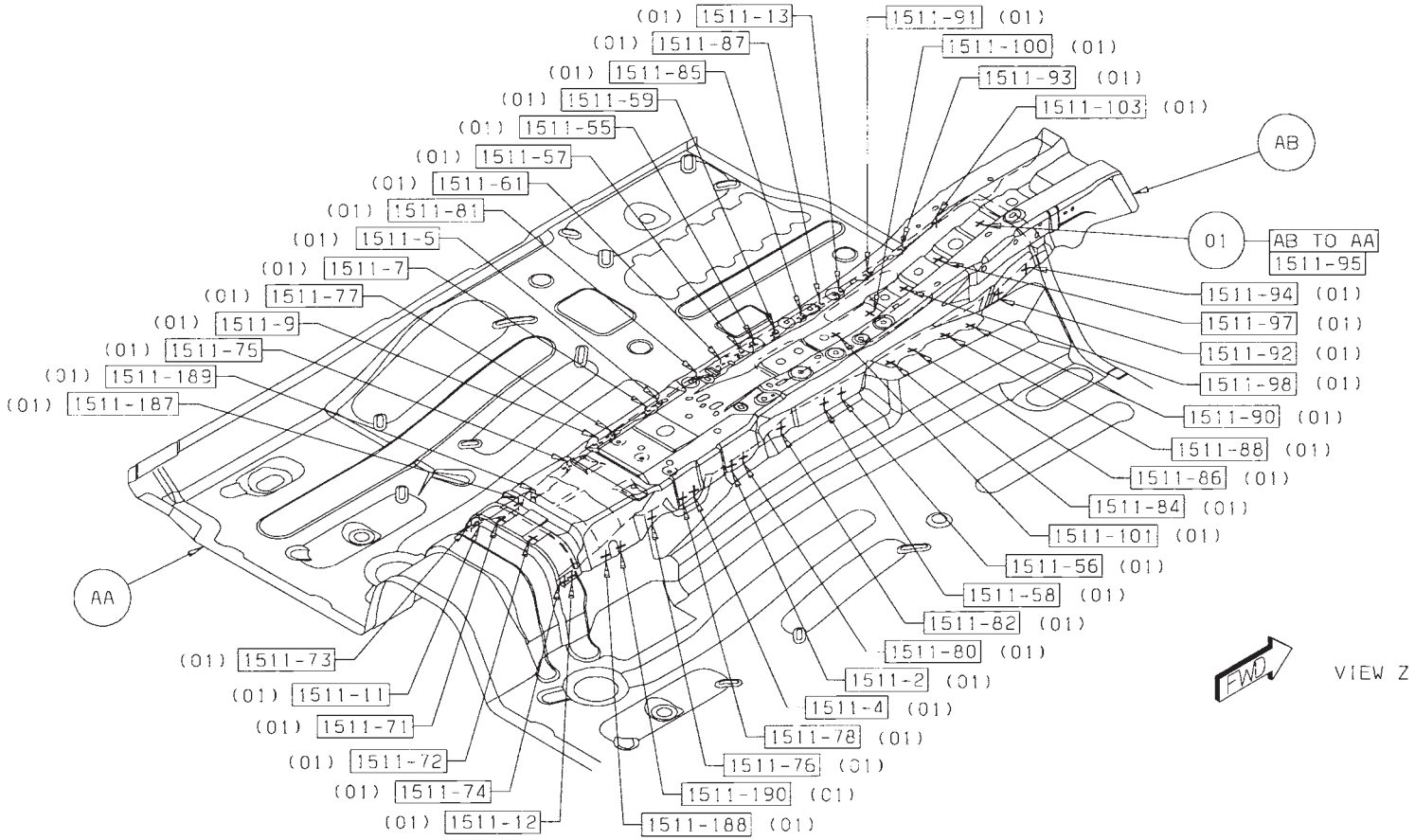

Back to Index

02 AC TO AA 31R S/WELDS (ORD)

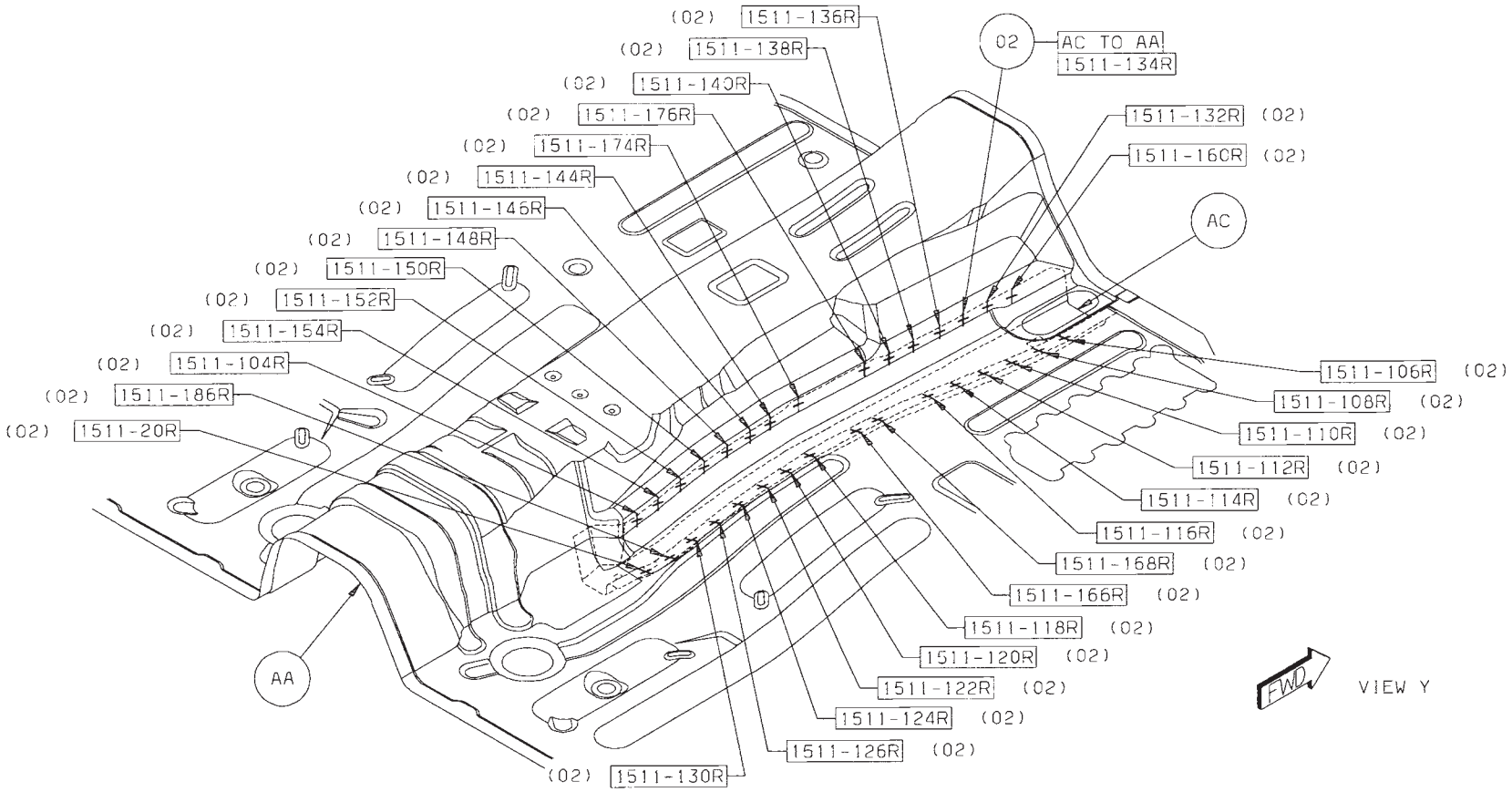

Back to Index

03 AC TO AA 30L S/WELDS (ORD)
04 AD TO AC TO AA 2L S/WELDS (ORD)

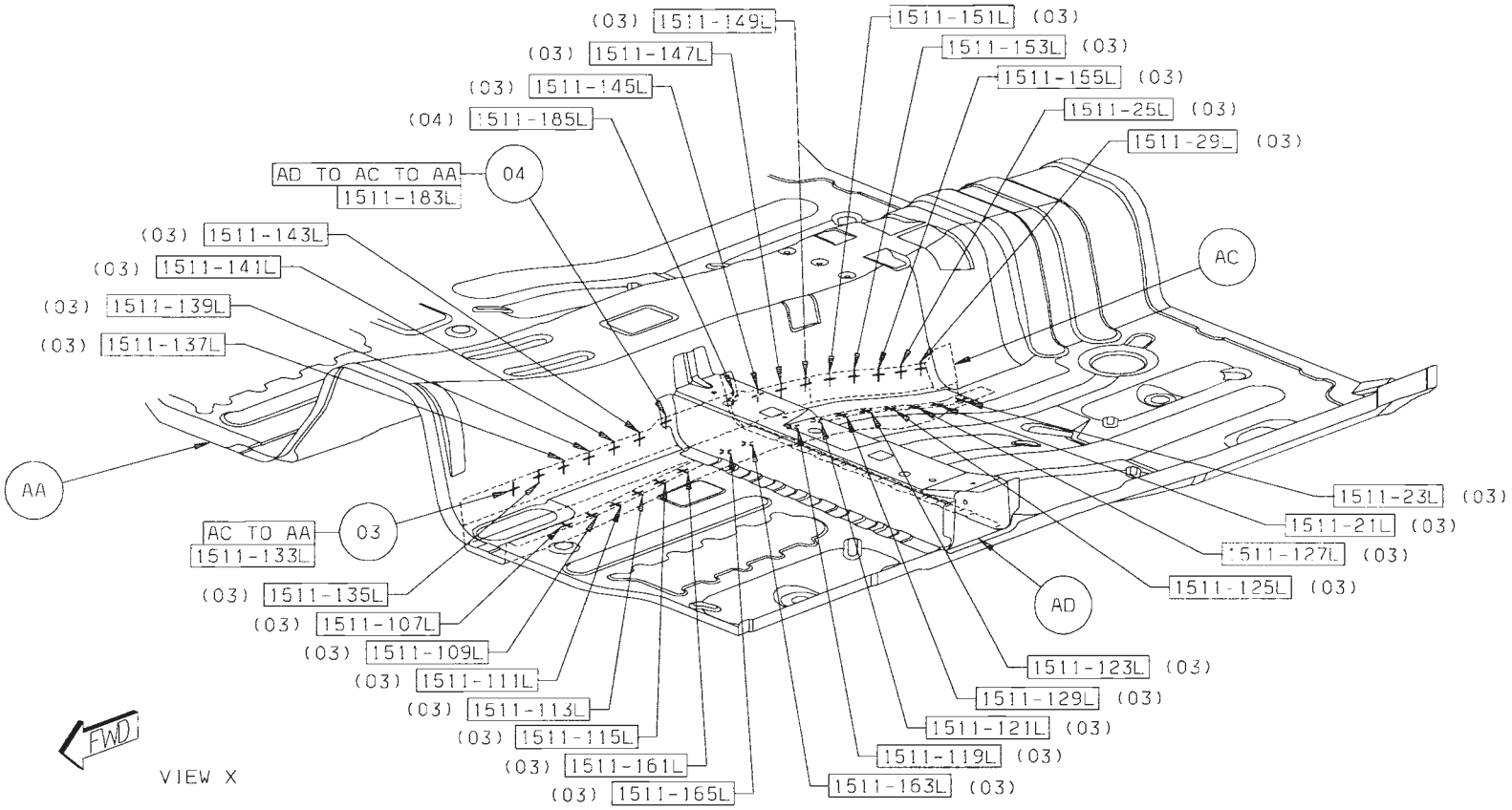

Back to Index

05 AE TO AB TO AA 4 S/WELDS (ORD)
06 AD TO AC TO AA 2R S/WELDS (ORD)
07 AD TO AA 16R S/WELDS (ORD)
08 AE TO AA 6 S/WELDS (ORD)

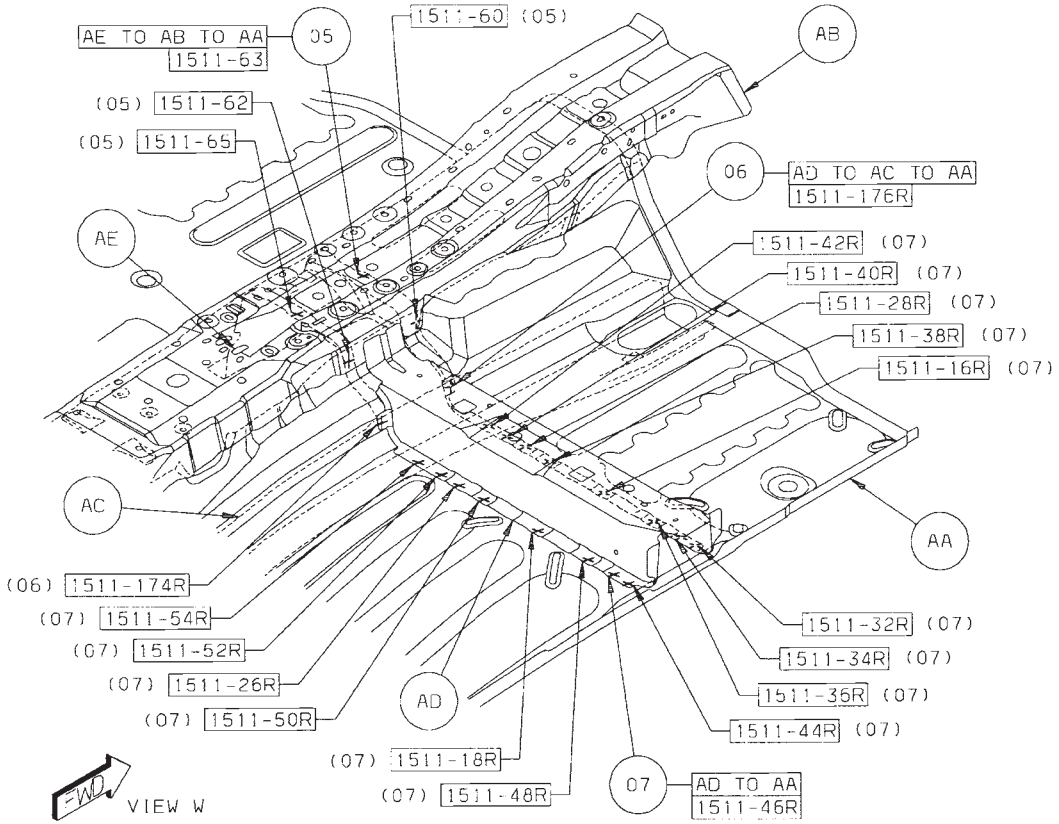

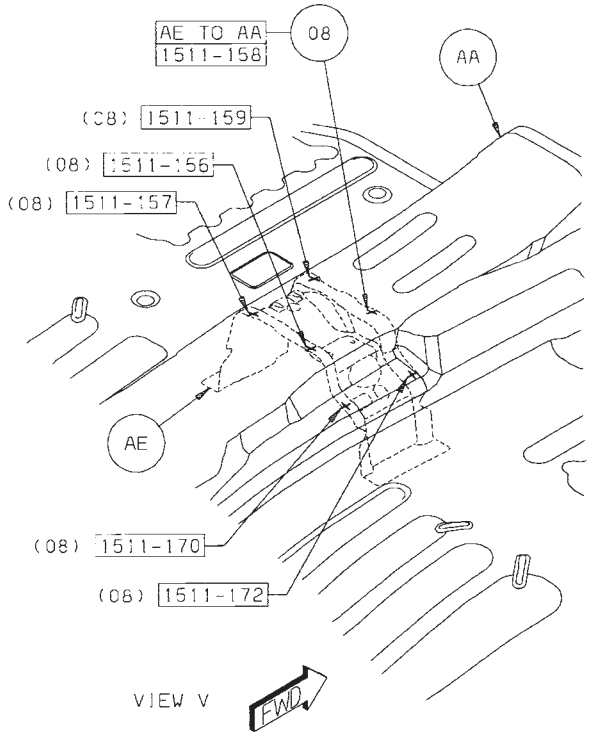

Back to Index

09 AE TO AD TO AA 2L S/WELDS (ORD)
10 AC TO AA 16L S/WELDS (ORD)
11 AF TO AC 1/SD PROJ WELD (ORD)
12 AG TO AB 3 PROJ WELDS (ORD)

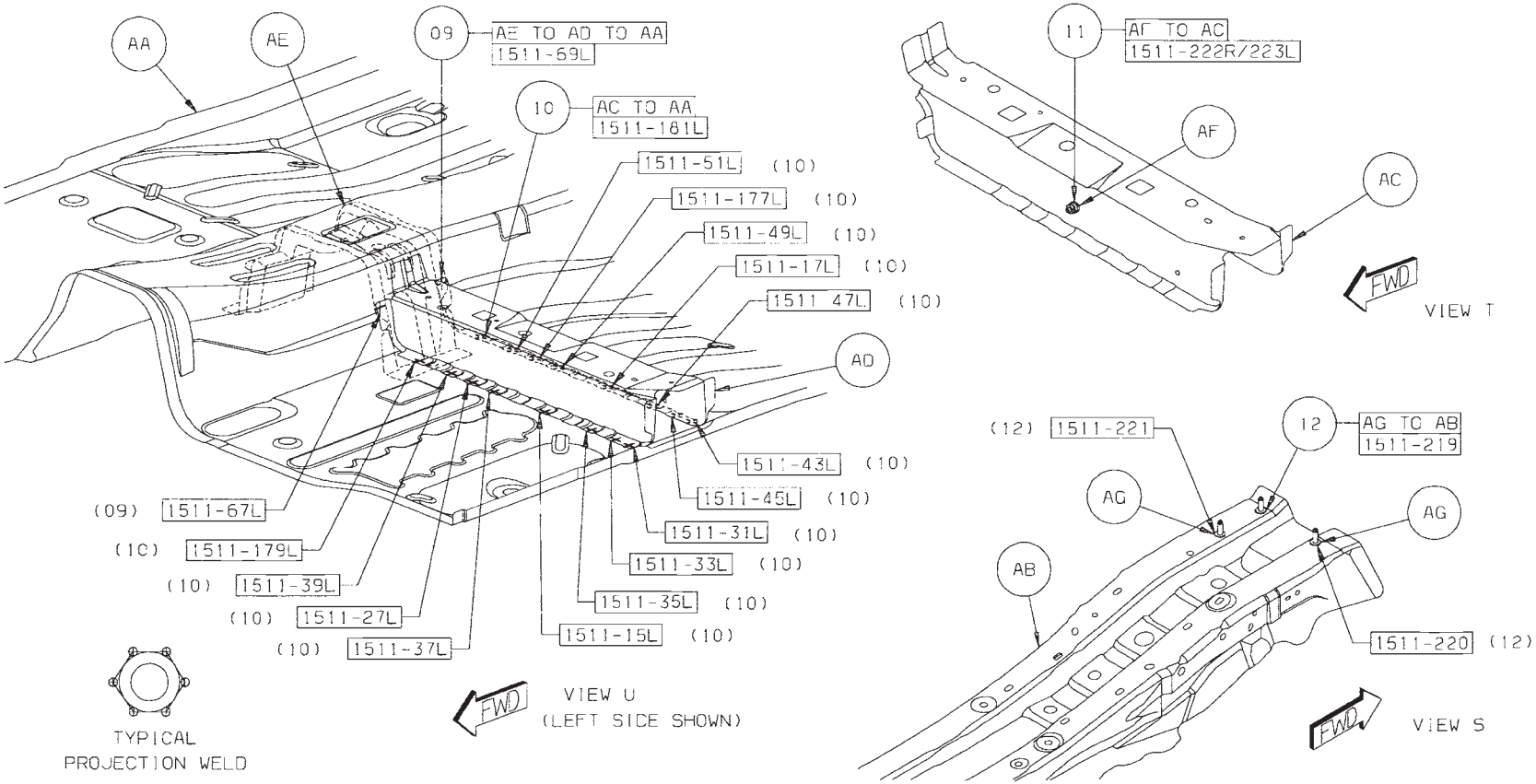

Back to Index

13 AH TO AA 9 PROJ WELDS (ORD)
14 AH TO AC 4 PROJ WELDS (ORD)

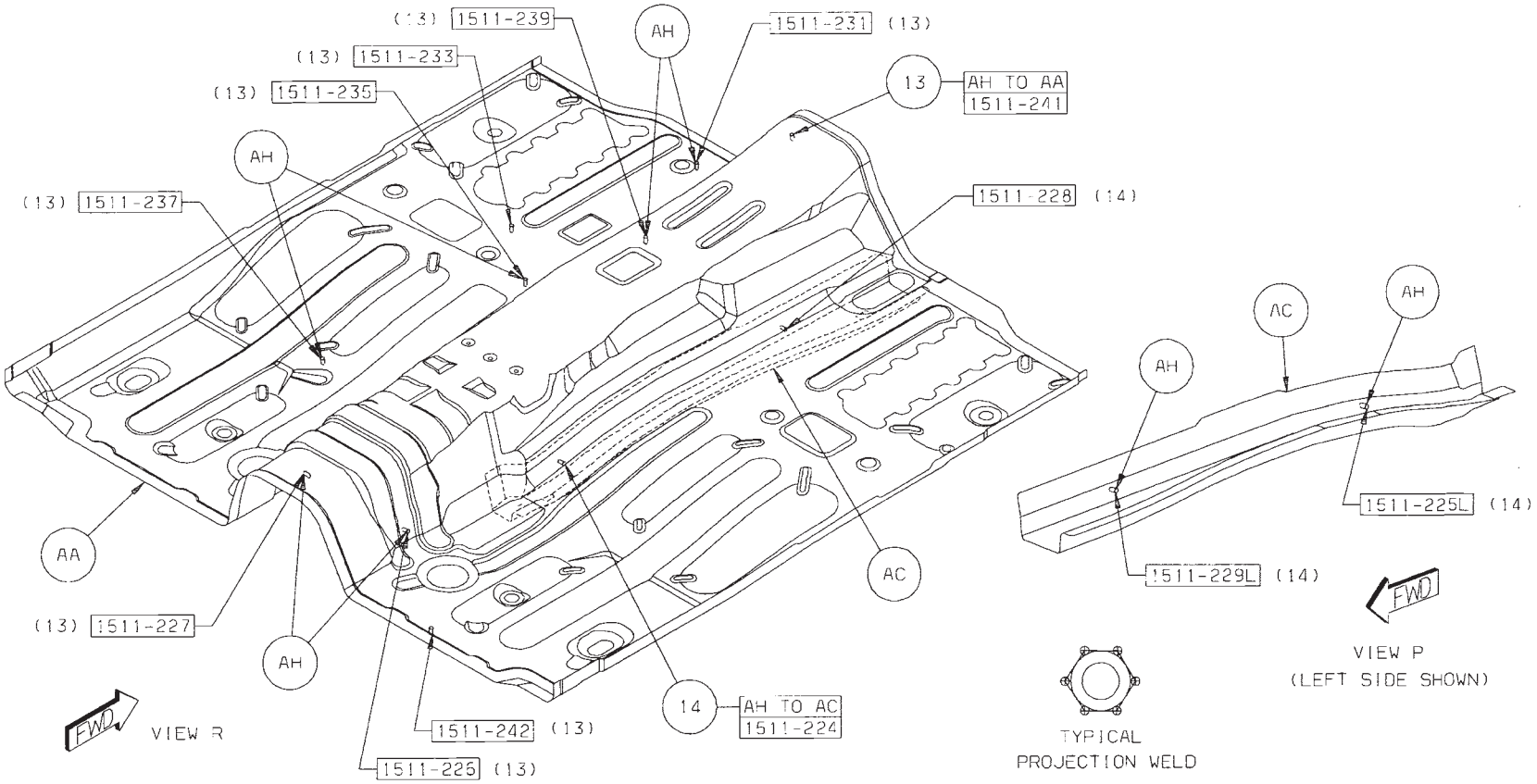

Back to Index

GAP AND FLUSH DIMENSIONS
CHRYSLER SEBRING

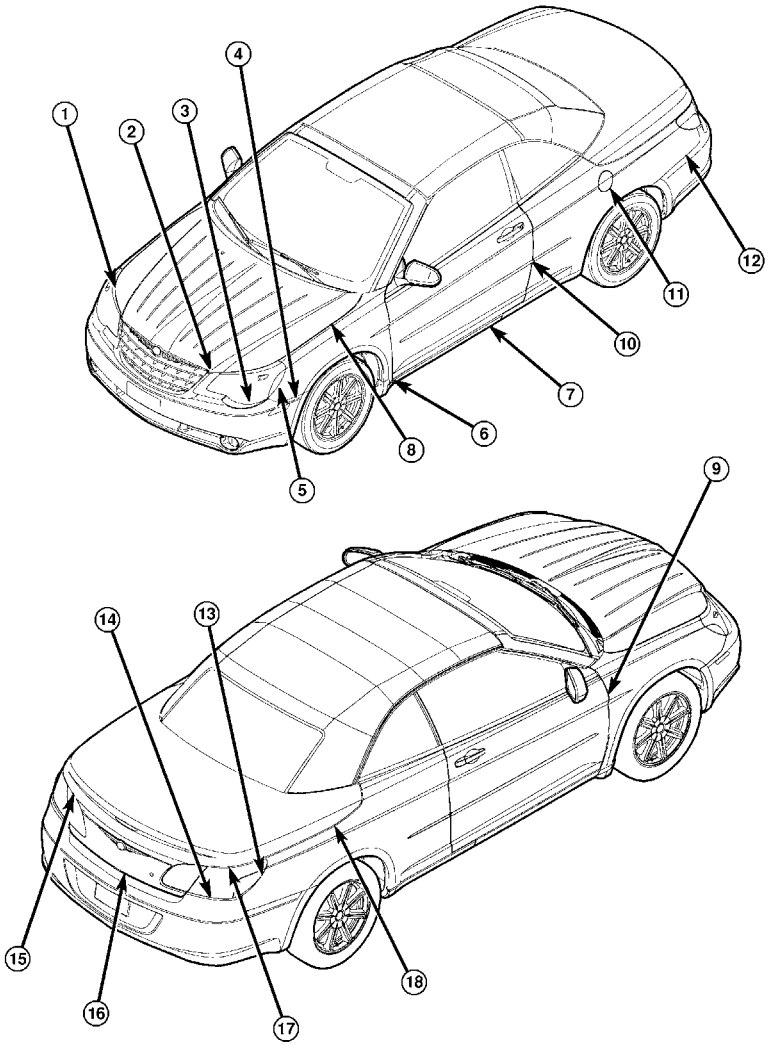

Back to Index

GAP AND FLUSH DIMENSIONS

DIMENSION	DESCRIPTION	GAP	FLUSH
1	Headlamp to Hood	3.5 +/- 1.7 Parallel within 1.5	Headlamp U/F 1.0 +/- 2.0 Parallel within 2.0
2	Fascia to Hood	6.0 +/- 1.5 Parallel within 2.0	Fascia U/F 2.5 +/- 2.0 Consistent within 2.0
3	Headlamp to Fascia	2.0 +/- 2.0 Parallel within 2.0	--
4	Fascia to Fender	Net to 1.0	+/- 1.0 Consistent within 1.5
5	Headlamp to Fender	2.0 +/- 1.7 Parallel within 2.0	Headlamp U/F 1.0 +/- 2.0
6	Fender to Body Side Aperture Sill Gap	2.0 +/- 1.0 Parallel within 1.5	Fender O/F 1.0 +/- 1.5 Consistent within 1.5
7	Body Side Aperture Sill to Door	6.0 +/- 1.5 Parallel within 1.5	--
8	Fender to Hood	3.5 +/- 1.2 Parallel within 1.5	Fore 0.0/1.0 +/- 1.5 Aft 0.0 +/-1.5 @ rear
9	Fender to Door	4.0 +/- 1.0 Parallel within 1.5	Fender O/F 4.0 +/- 1.2 Consistent within 1.5
10	Door to Quarter Panel	4.0 +/- 1.2 Parallel within 1.5	--
11	Fuel Filler Door to Quarter Panel	3.0 +/- 0.8 Parallel within 0.8	Fuel Filler Door U/F 0.5 +/- 1.0 Consistent within 1.5
12	Fascia to Body Side Aperture	Net to 1.0	0.0 +/- 1.0 Parallel within 1.5
13	Tail Lamp to Body Side Aperture	2.0 +/- 1.5 Parallel within 2.0	Tail Lamp U/F 1.0 +/- 2.0 Consistent within 2.0
14	Tail Lamp to Fascia	2.0 +/- 2.0 Parallel within 2.0	--
15	Backup Lamp to Decklid	2.0 +/- 1.5 Parallel within 2.0	Backup Lamp O/F 1.0+/-2.0 Consistent within 2.0
16	Fascia to Decklid	8.0 +/- 2.0 Parallel within 2.0	--
17	Tail Lamp to Decklid	8.0 +/- 2.0 Parallel within 2.0	Tail Lamp U/F 1.0 +/- 2.0 Consistent within 2.0
18	Decklid to Body Side Aperture	6.0 +/- 1.5 Parallel within 1.5	Decklid O/F 0 to .9 +/- 1.5 Consistent within 1.5 (U/D)

2008 JS27 Chrysler

NOTE:

All measurements are in millimeters. O/F = Over Flush U/F = Under Flush
U/D = Up/Down F/A = Fore/Aft

Back to Index

HISTORY OF COLLISION REPAIR

Time was, if you had an accident, the call went out to the insurance company - to the collision shop - or several shops - get the lowest bid and in no time at all, the vehicle was repaired.

The facilities, training, and equipment were simple. Use a torch to cut, shape, and bend. Use something substantial as an anchoring point - maybe a tree and then just pull.

Use plenty of solder or body putty to make it look good. With the frame and body vehicle, the job was easy; first straighten the frame - then fix the mechanical components and the body work was cosmetic. This was all well and good until the mid - '70s.

Then, the designers, engineers, and manufacturers had to find ways to make the vehicles energy efficient - and that meant unibody cars. The unibody concept wasn't new - back in the '30s the Chrysler Air Flow had it - race cars have it - and now the driving public worldwide has it.

The change came quickly. Manufacturers devoted time, money, and talent to develop the unibody car.
The public was ready to buy and did!

But then came the problem! The collision repair industry wasn't given the luxury of taking their time to train people in the new technology - or take time to plan for new equipment.

The collision happened and the vehicle had to be fixed. Cars that were repairable were being totalled.

Cars that were repaired were not repaired correctly. Everybody was in a **quandary** - auto manufacturer - insurance company - repair equipment people - body shops - and repair technicians.

The problem started in the early '70s and body shops are still catching up today. Yesterday's "ding" is today's "crash". It takes trained technicians and sophisticated equipment to do the repair today.

That's why DaimlerChrysler is taking the time and effort to get the right information into the hands of the people that handle the repair job.

Back to Index

HISTORY OF COLLISION REPAIR

Time was, if you had an accident, the call went out to the insurance company - to the collision shop - or several shops - get the lowest bid and in no time at all, the vehicle was repaired.

The facilities, training, and equipment were simple. Use a torch to cut, shape, and bend. Use something substantial as an anchoring point - maybe a tree and then just pull.

Use plenty of solder or body putty to make it look good. With the frame and body vehicle, the job was easy; first straighten the frame - then fix the mechanical components and the body work was cosmetic. This was all well and good until the mid - '70s.

Then, the designers, engineers, and manufacturers had to find ways to make the vehicles energy efficient - and that meant unibody cars. The unibody concept wasn't new - back in the '30s the Chrysler Air Flow had it - race cars have it - and now the driving public worldwide has it.

The change came quickly. Manufacturers devoted time, money, and talent to develop the unibody car.
The public was ready to buy and did!

But then came the problem! The collision repair industry wasn't given the luxury of taking their time to train people in the new technology - or take time to plan for new equipment.

The collision happened and the vehicle had to be fixed. Cars that were repairable were being totalled.

Cars that were repaired were not repaired correctly. Everybody was in a **quandary** - auto manufacturer - insurance company - repair equipment people - body shops - and repair technicians.

The problem started in the early '70s and body shops are still catching up today. Yesterday's "ding" is today's "crash". It takes trained technicians and sophisticated equipment to do the repair today.

That's why Chrysler LLC is taking the time and effort to get the right information into the hands of the people that handle the repair job.

Back to Index

CHRYSLER SEBRING HOOD SECTION

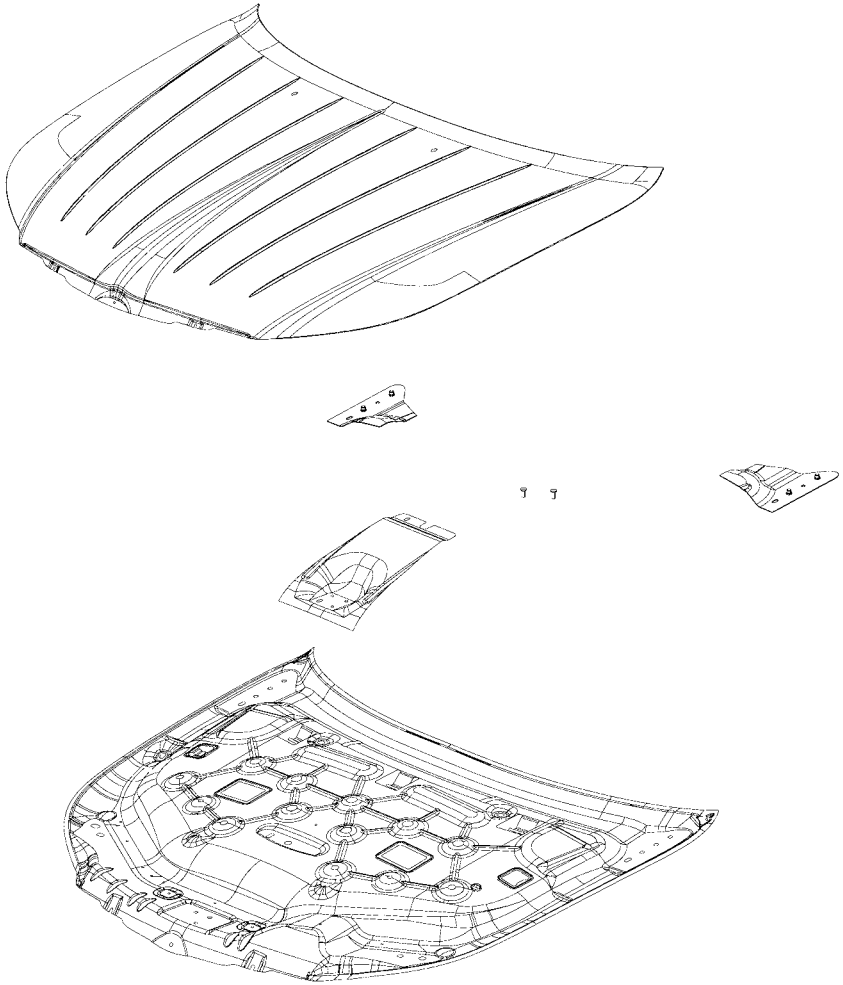

AA PANEL – HOOD INR –
AB REINF – HOOD INR PANEL STRIKER –
AC REINF – HOOD INR PANEL HINGE –
AD PANEL – HOOD OTR –

Back to Index

PARTS IDENTIFICATION LEGEND, OVERVIEW 39

AA PANEL – HOOD INR –
AB REINF – HOOD INR PANEL STRIKER –
AC REINF – HOOD INR PANEL HINGE –
AD PANEL – HOOD OTR –

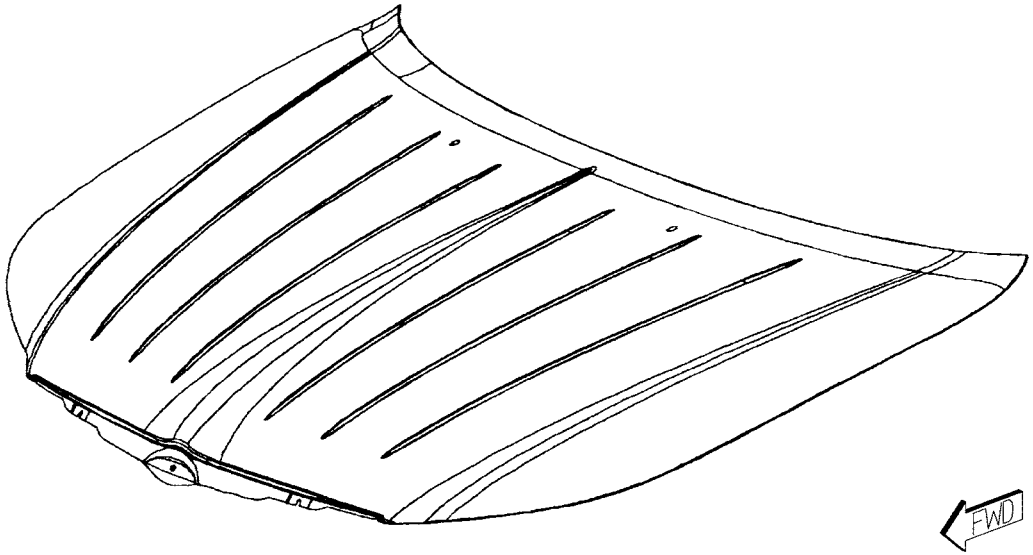

Back to Index

WELD LAYOUT LOCATION GUIDE

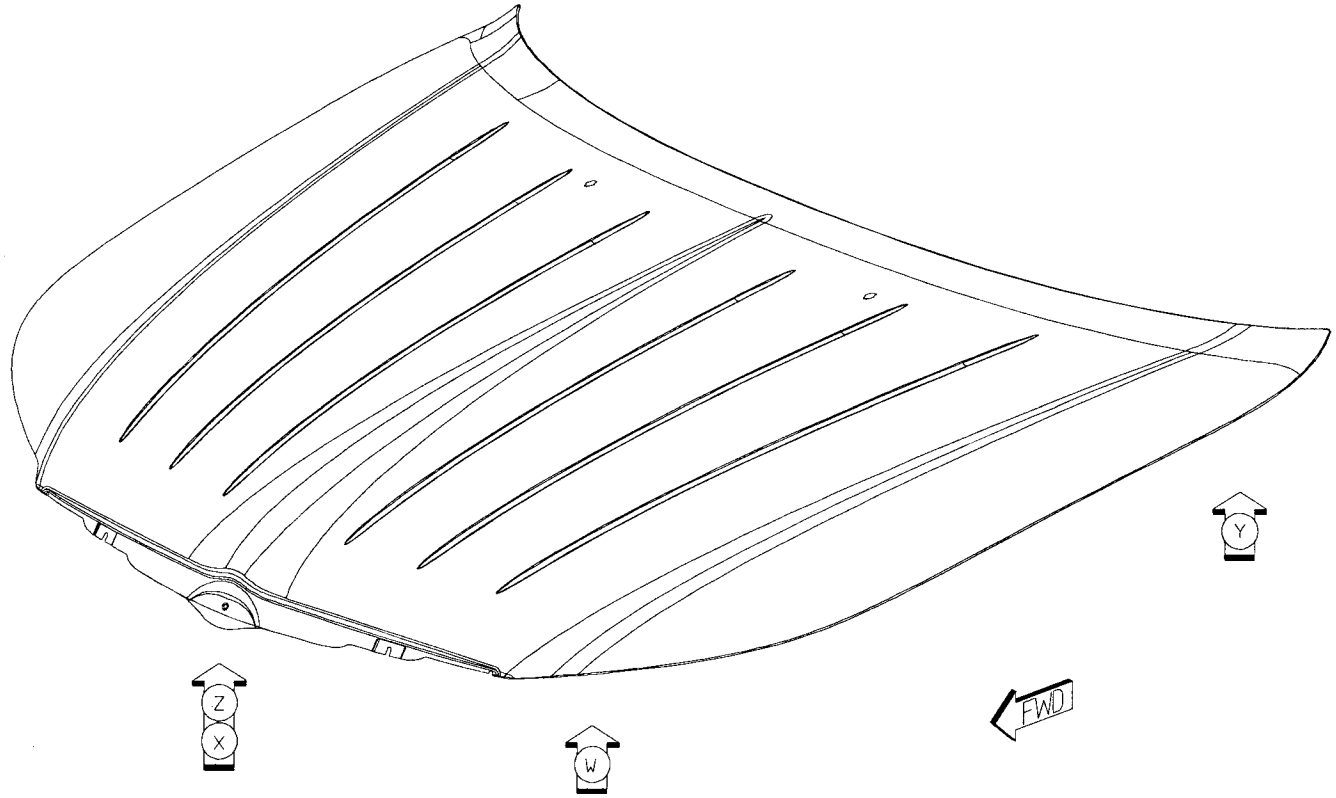

Back to Index

01 AB TO AA 12 S/WELDS (ORD)
02 AC TO AA 4/SD S/WELDS (ORD)

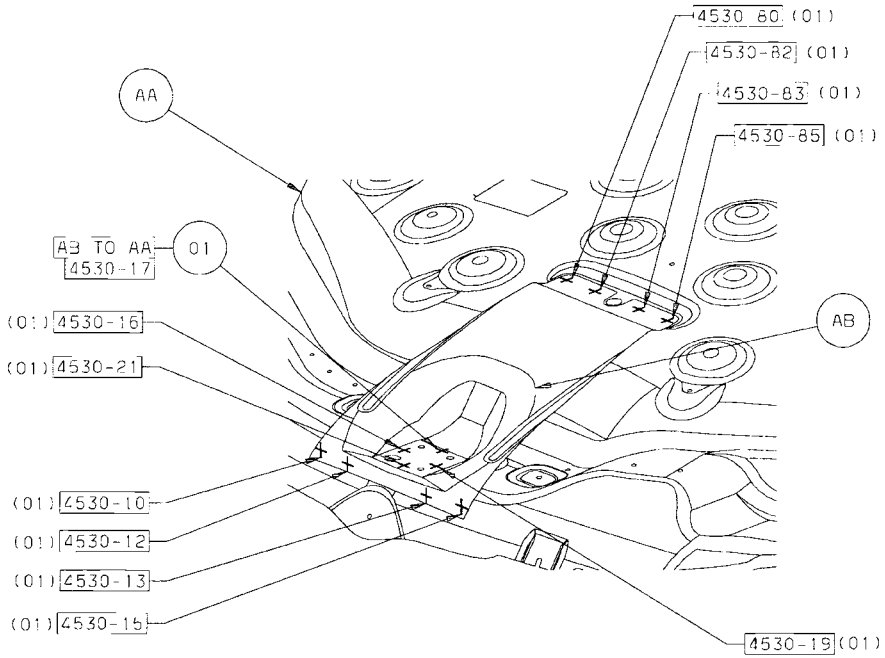

VIEW Z

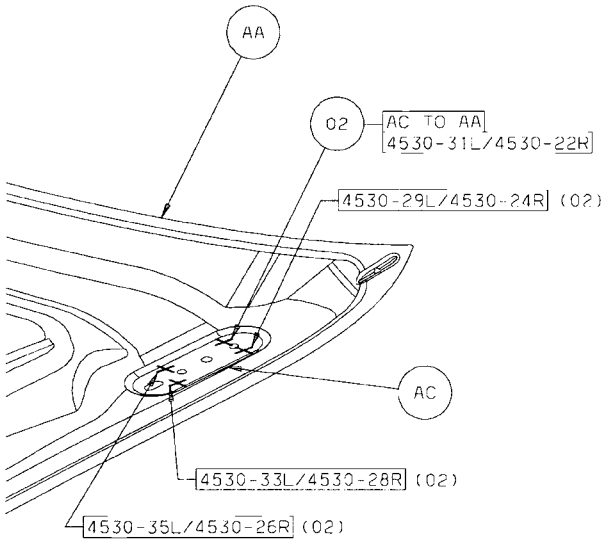

VIEW Y

Back to Index

03 AA TO AD 6 S/WELDS (ORD)

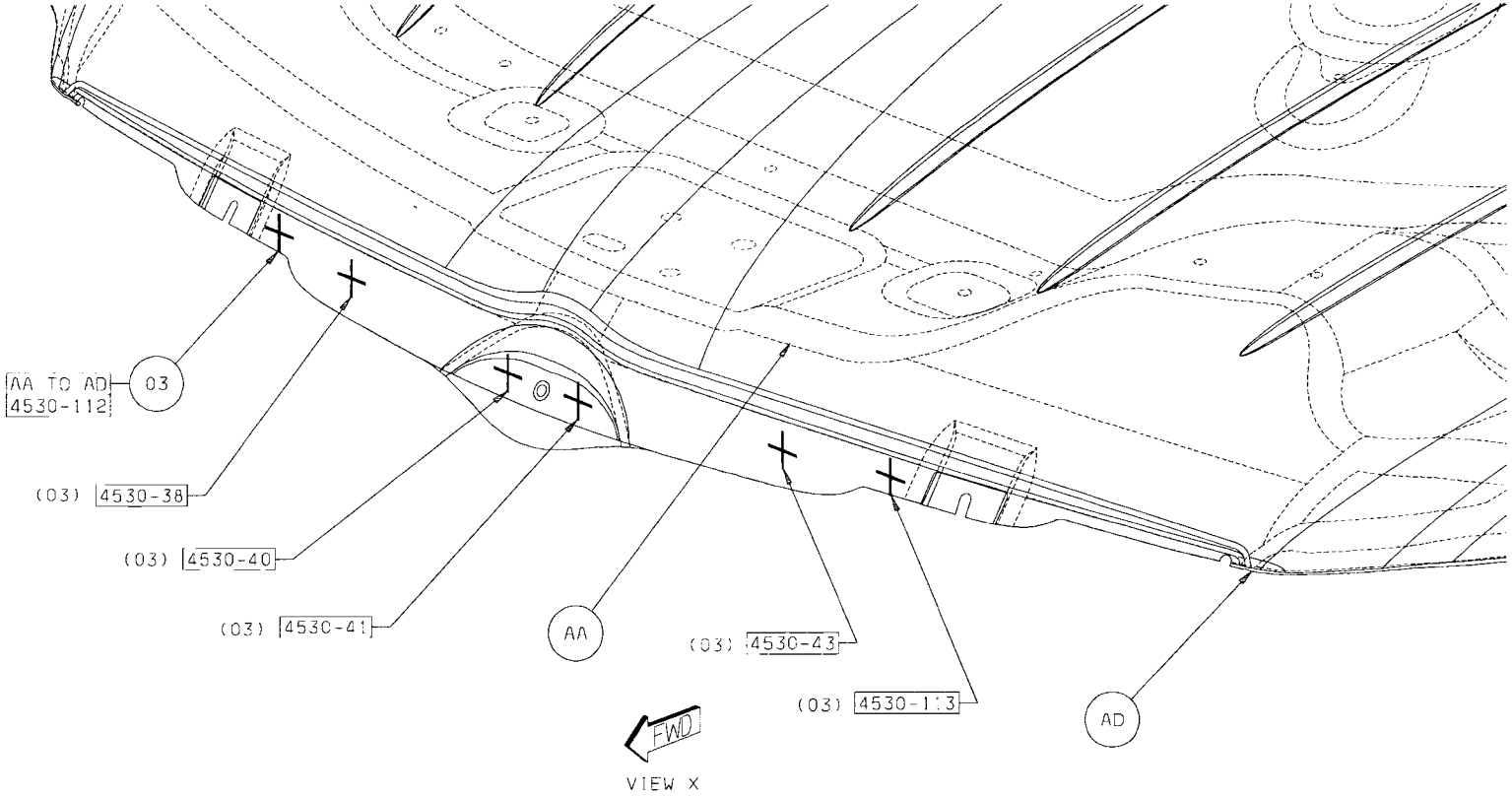

Back to Index

04 AA TO AD 13 STRUC ADH
05 AA TO AD 2 STRUC ADH
06 AA TO AD 2 STRUC ADH
07 AA TO AD 2 STRUC ADH
08 AA TO AD 1 STRUC ADH

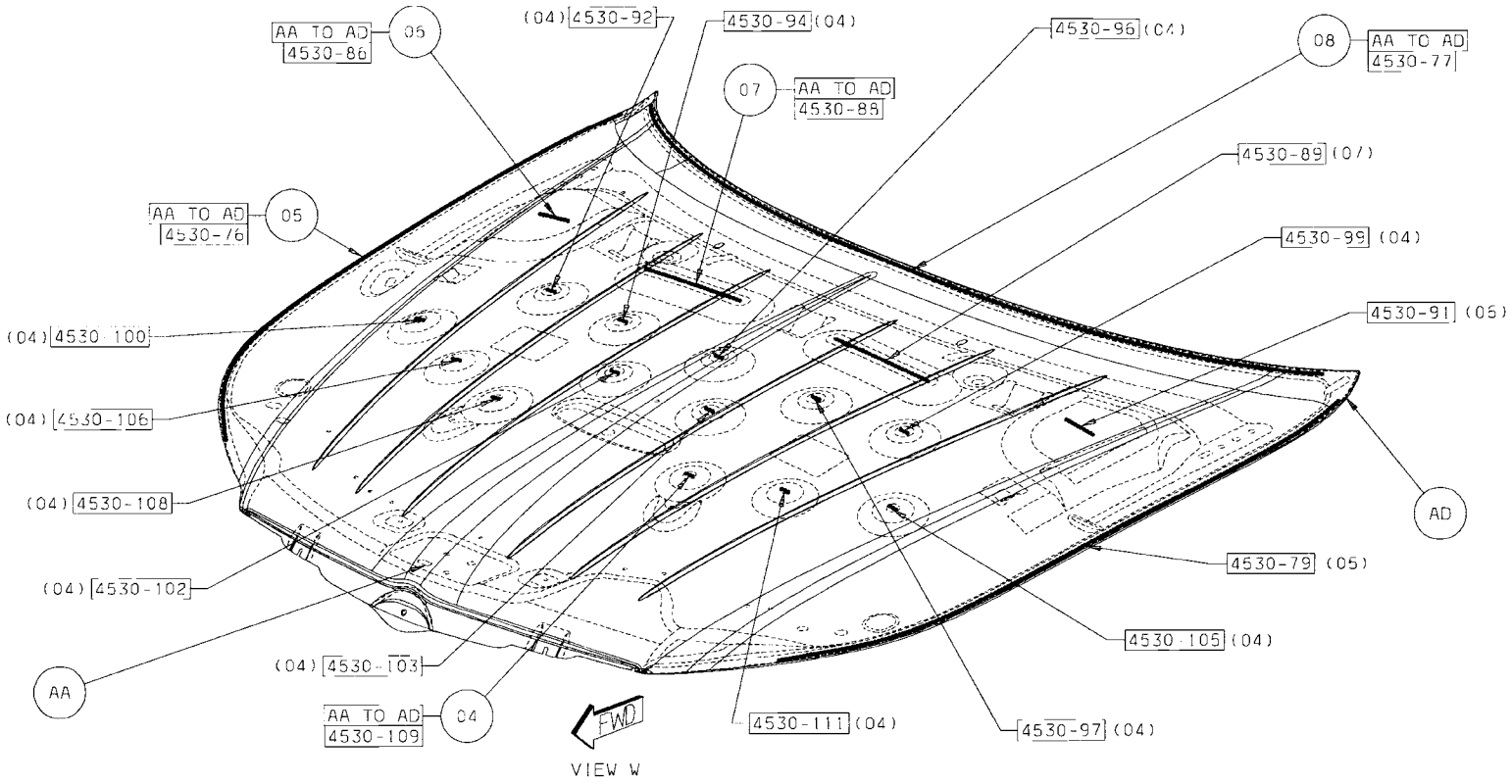

Back to Index

DODGE AVENGER HOOD SECTION

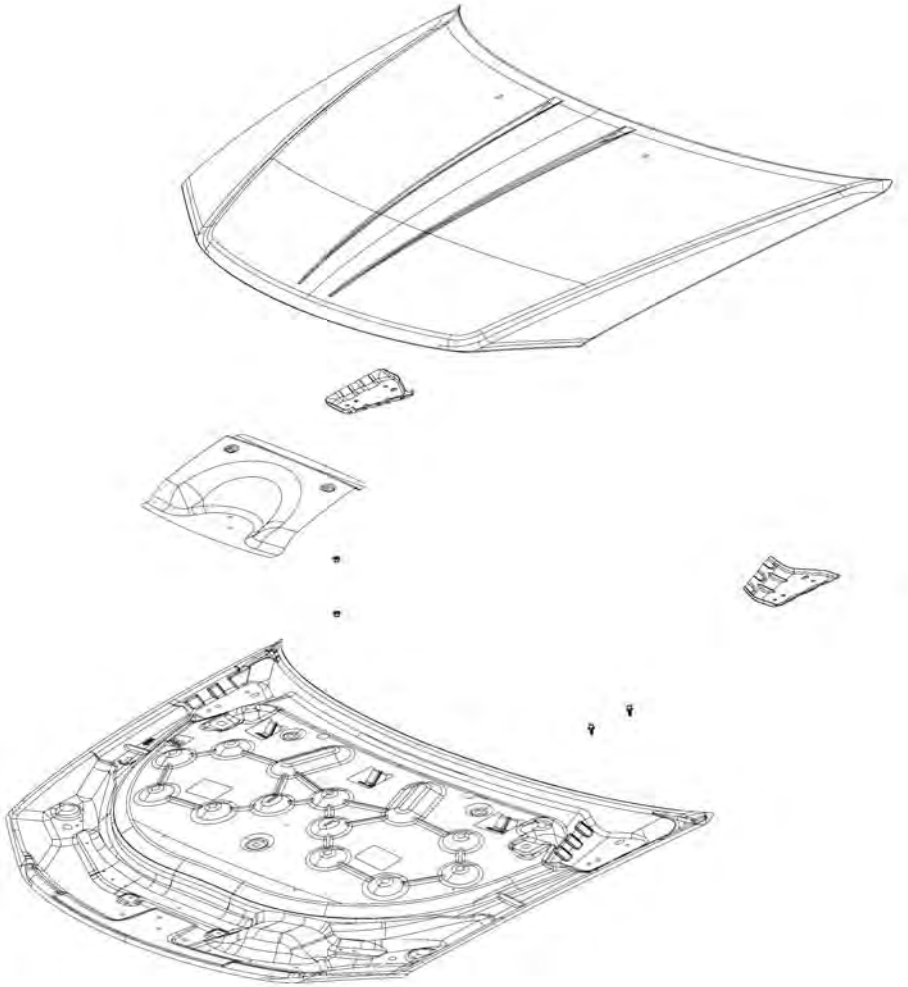

AA PANEL – HOOD INR –
AB REINF – HOOD INR PANEL STRIKER –
AC REINF – HOOD INR PANEL HINGE –
AD PANEL – HOOD OTR –

Back to Index

PARTS IDENTIFICATION LEGEND, OVERVIEW 40

AA PANEL – HOOD INR –
AB REINF – HOOD INR PANEL STRIKER –
AC REINF – HOOD INR PANEL HINGE –
AD PANEL – HOOD OTR –

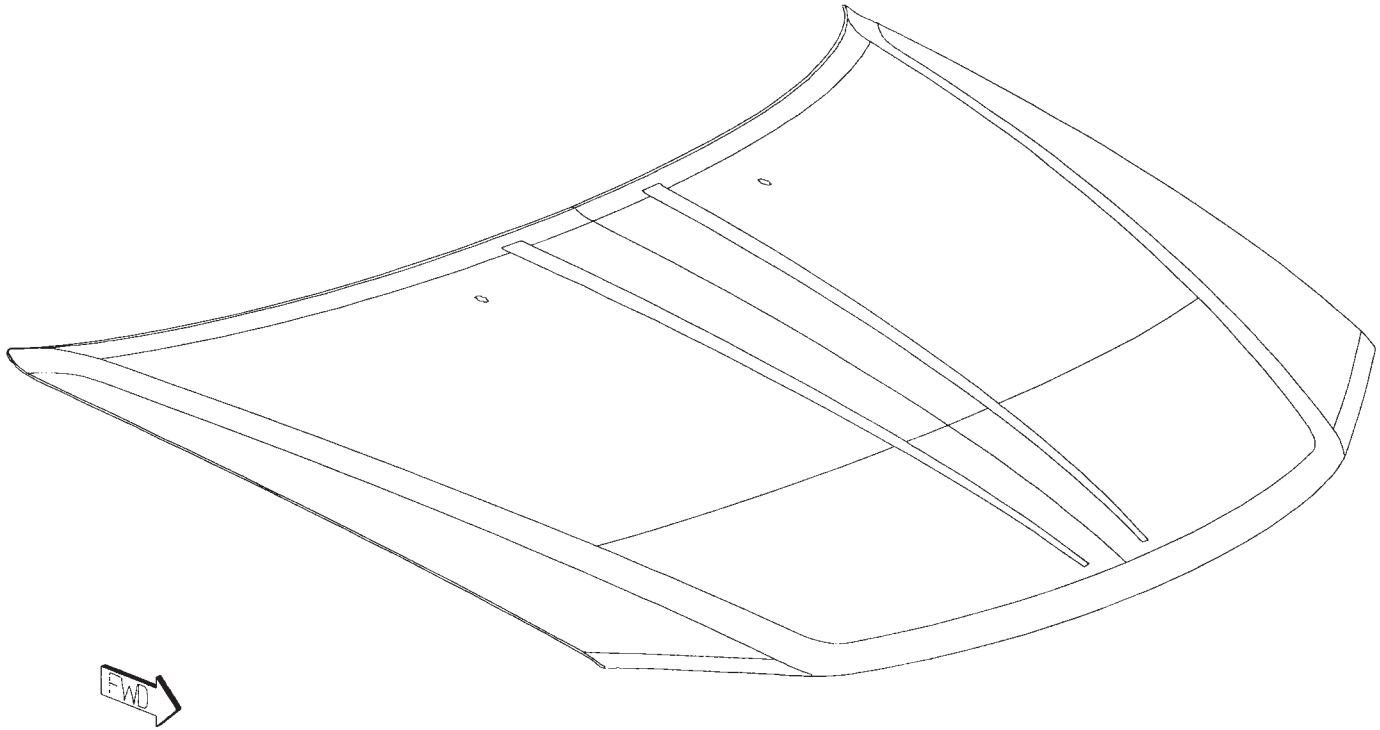

Back to Index

WELD LAYOUT LOCATION GUIDE

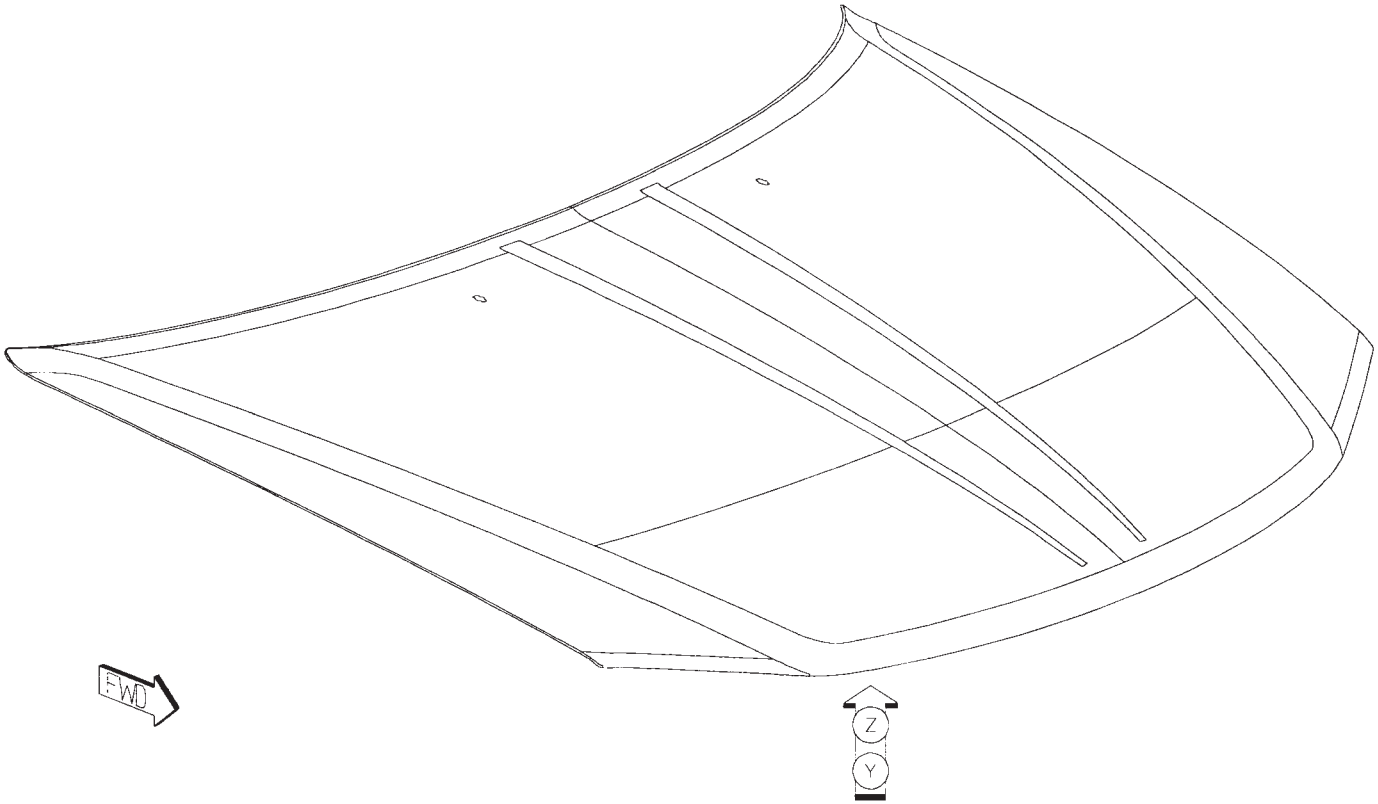

Back to Index

01 AC TO AA 8 S/WELDS (ORD)
02 AB TO AA 16 S/WELDS (ORD)

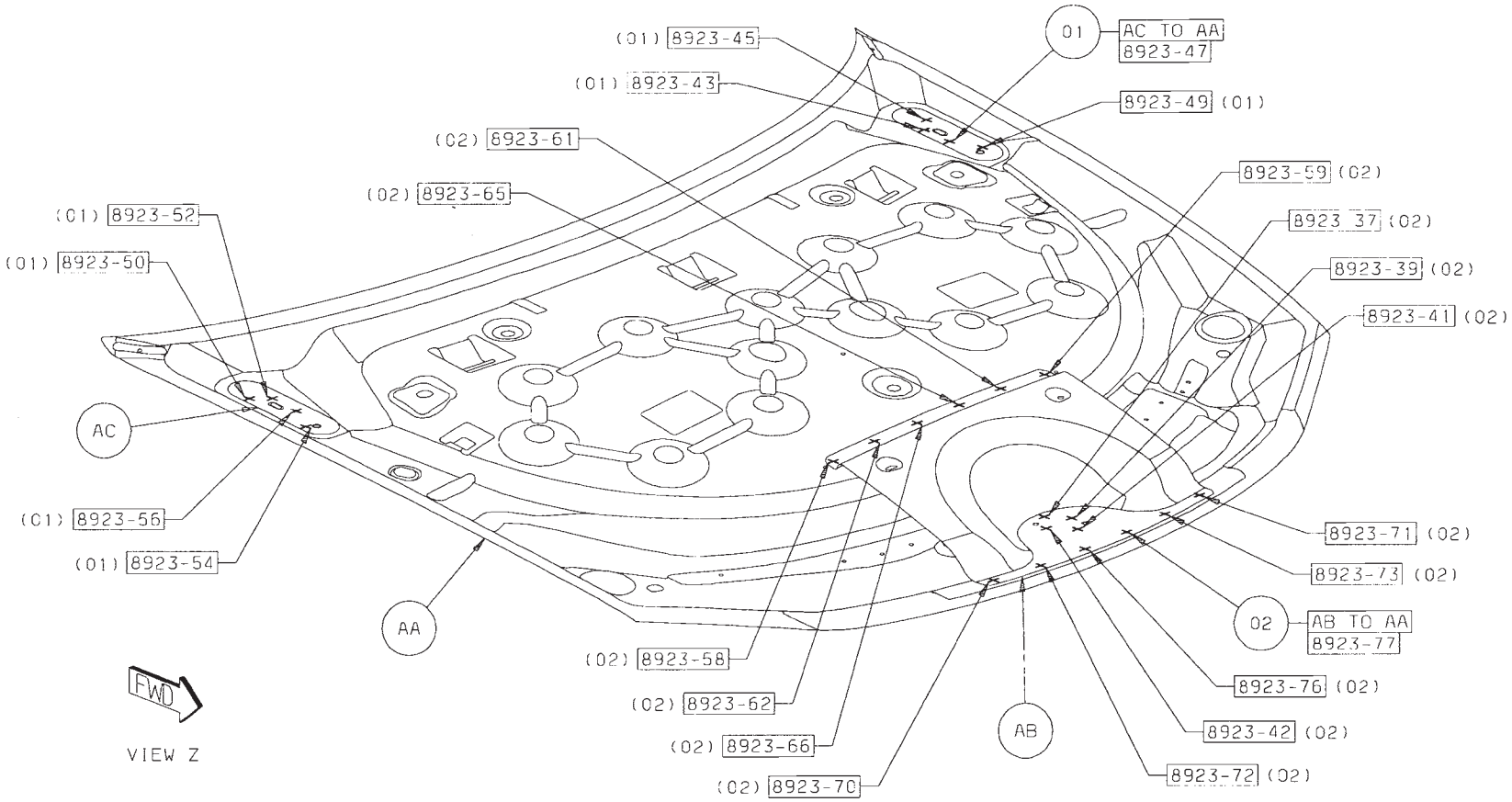

Back to Index

03 AD TO AA 13 STRUC ADH
04 AD TO AA 1 STRUC ADH
05 AD TO AA 2 STRUC ADH
06 AD TO AA 1 STRUC ADH
07 AB TO AD 2 STRUC ADH
08 AB TO AD 1 STRUC ADH

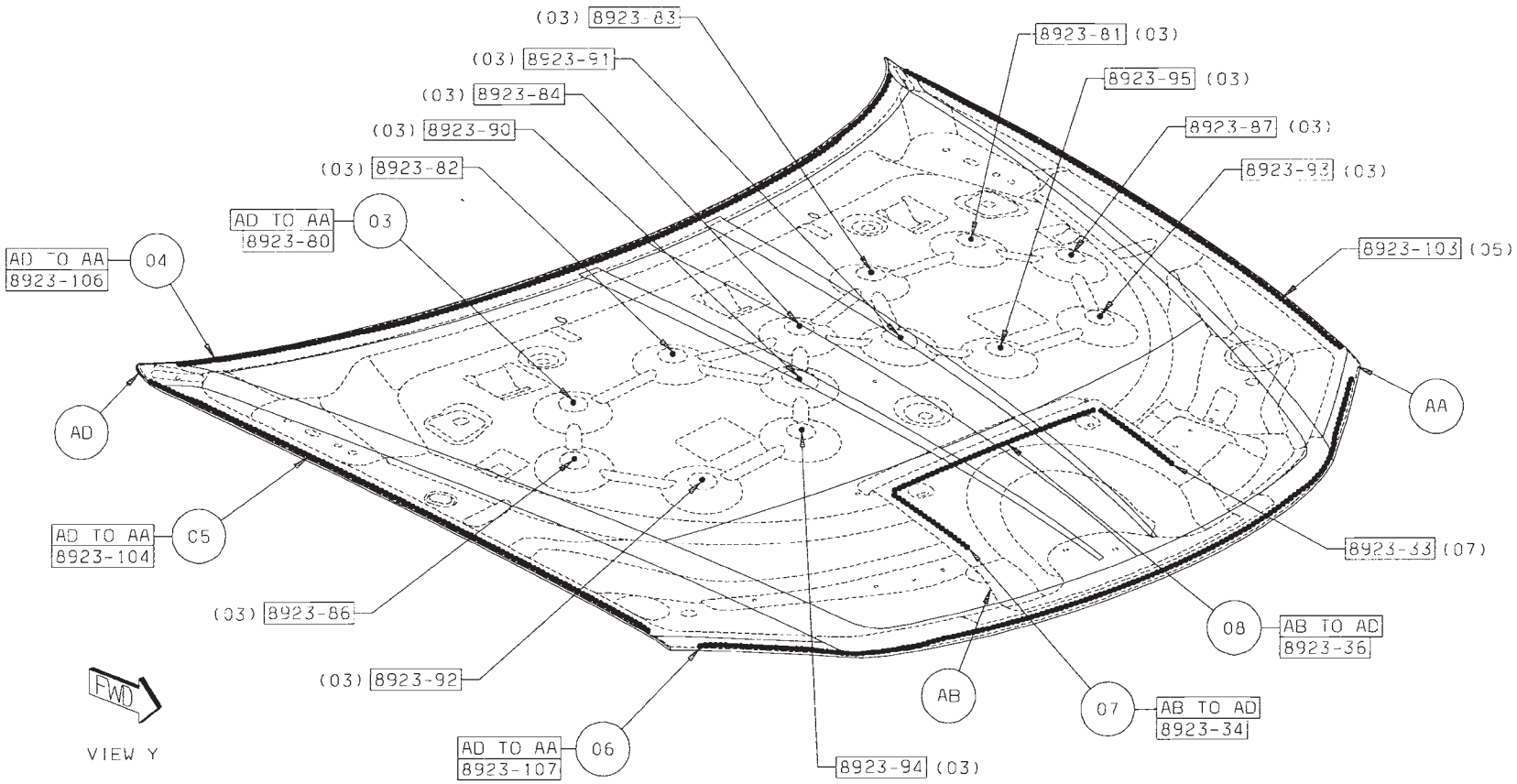

Back to Index

CHRYSLER SEBRING HOOD SECTION

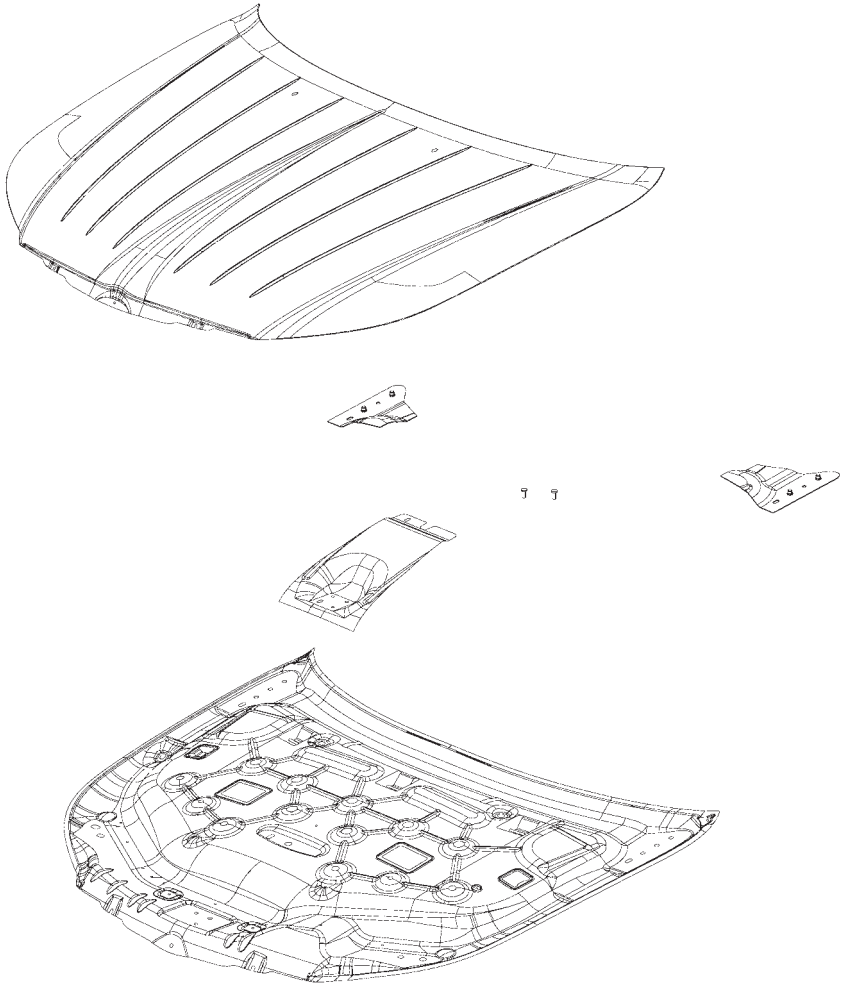

AA PANEL – HOOD INR –
AB REINF – HOOD INR PANEL STRIKER –
AC REINF – HOOD INR PANEL HINGE –
AD PANEL – HOOD OTR –

Back to Index

PARTS IDENTIFICATION LEGEND, OVERVIEW 39

AA PANEL – HOOD INR –
AB REINF – HOOD INR PANEL STRIKER –
AC REINF – HOOD INR PANEL HINGE –
AD PANEL – HOOD OTR –

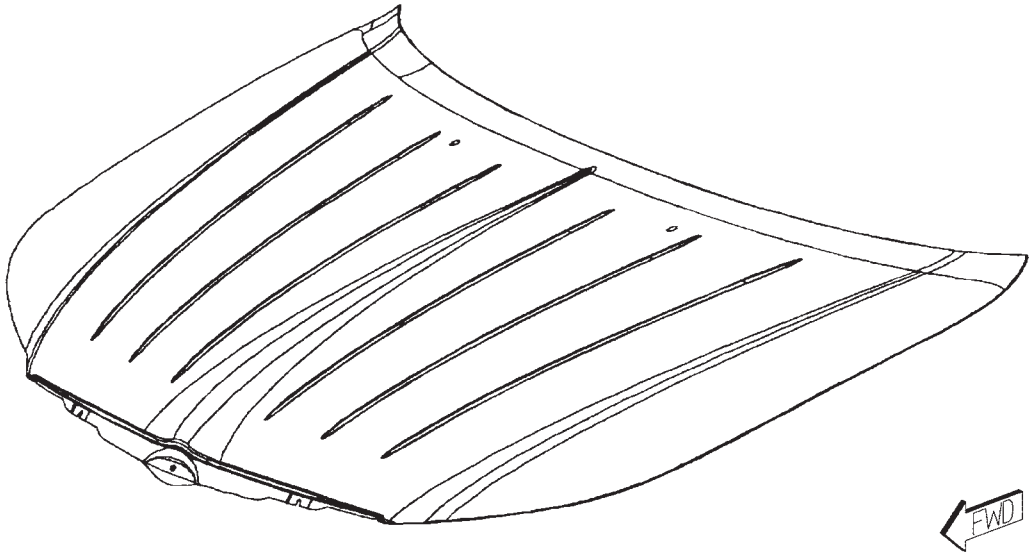

Back to Index

WELD LAYOUT LOCATION GUIDE

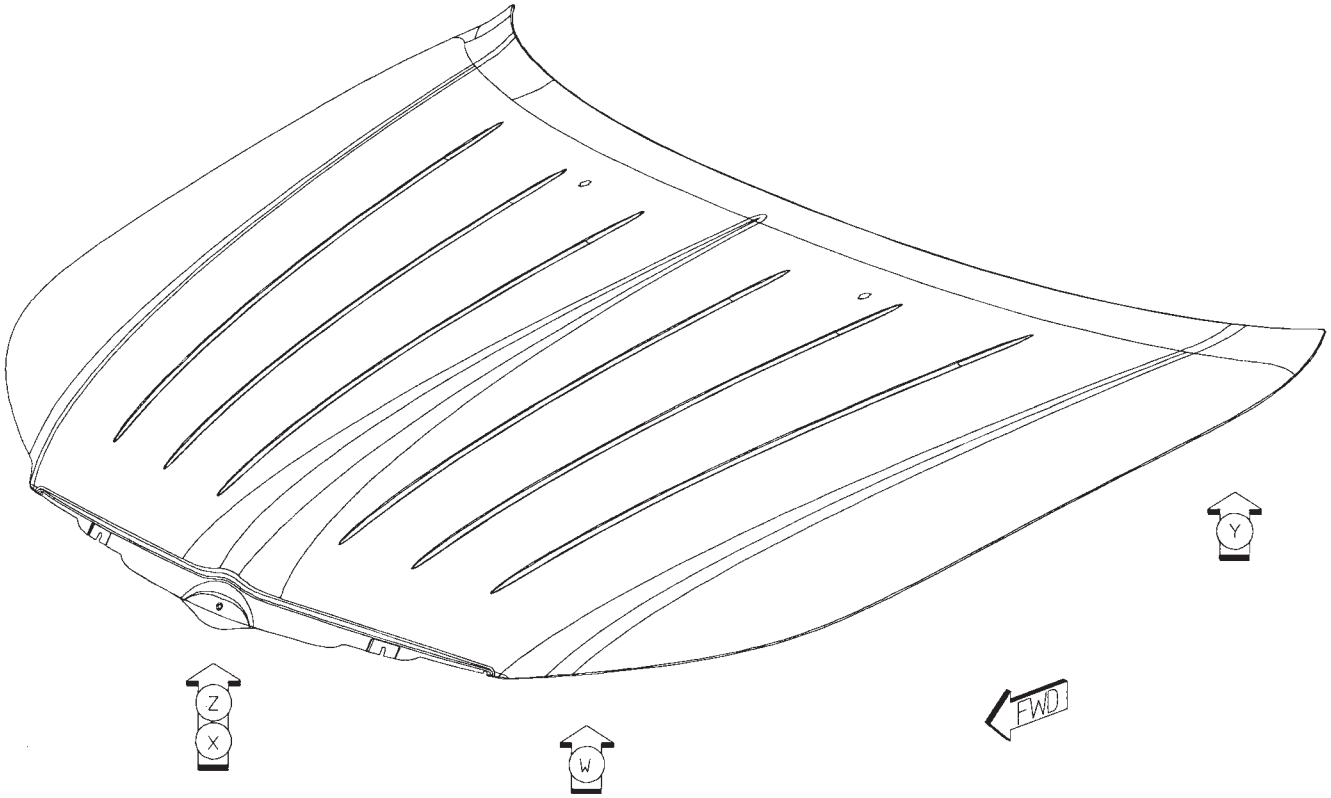

Back to Index

01 AB TO AA 12 S/WELDS (ORD)
02 AC TO AA 4/SD S/WELDS (ORD)

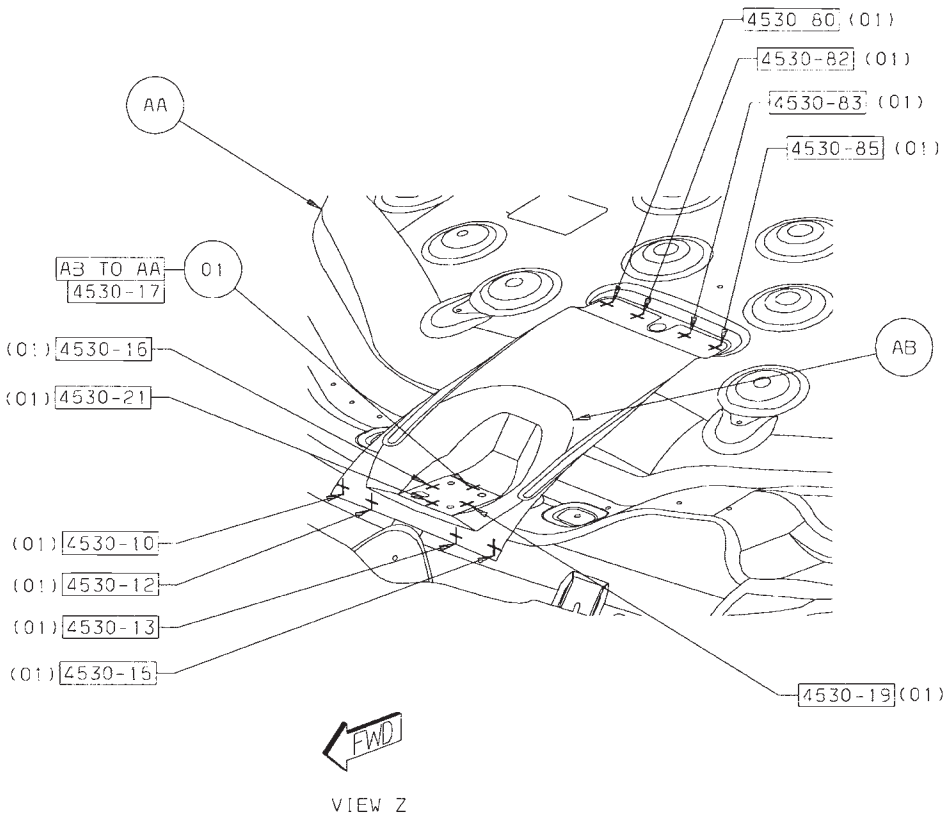

VIEW Z

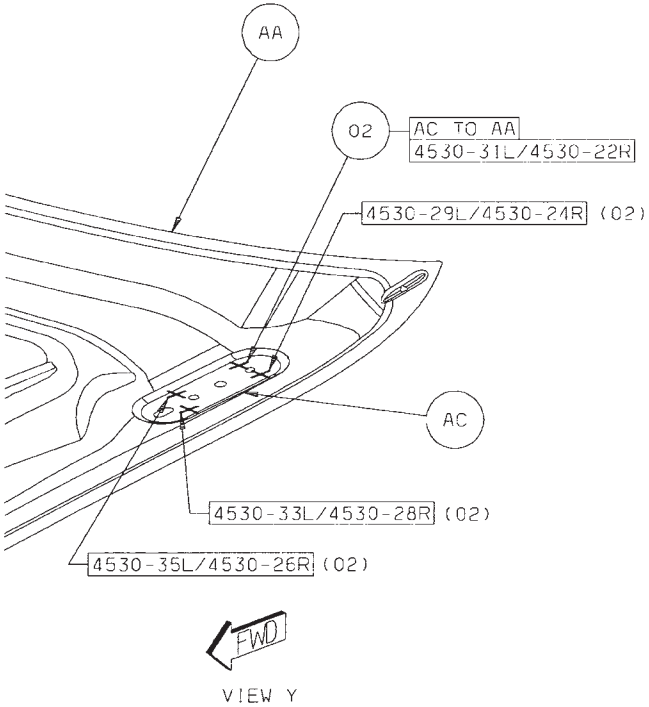

VIEW Y

Back to Index

03 AA TO AD 6 S/WELDS (ORD)

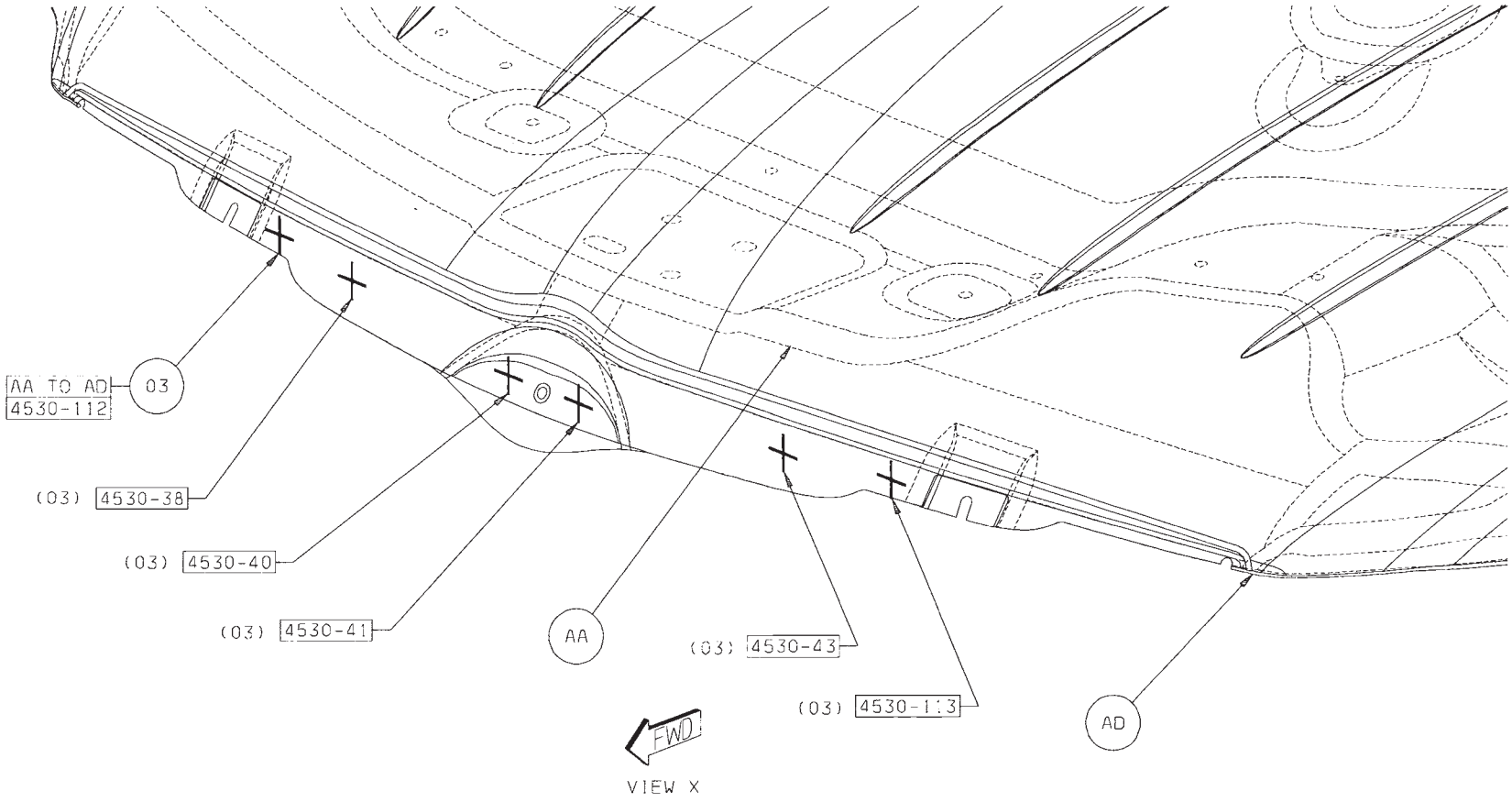

Back to Index

04 AA TO AD 13 STRUC ADH
05 AA TO AD 2 STRUC ADH
06 AA TO AD 2 STRUC ADH
07 AA TO AD 2 STRUC ADH
08 AA TO AD 1 STRUC ADH

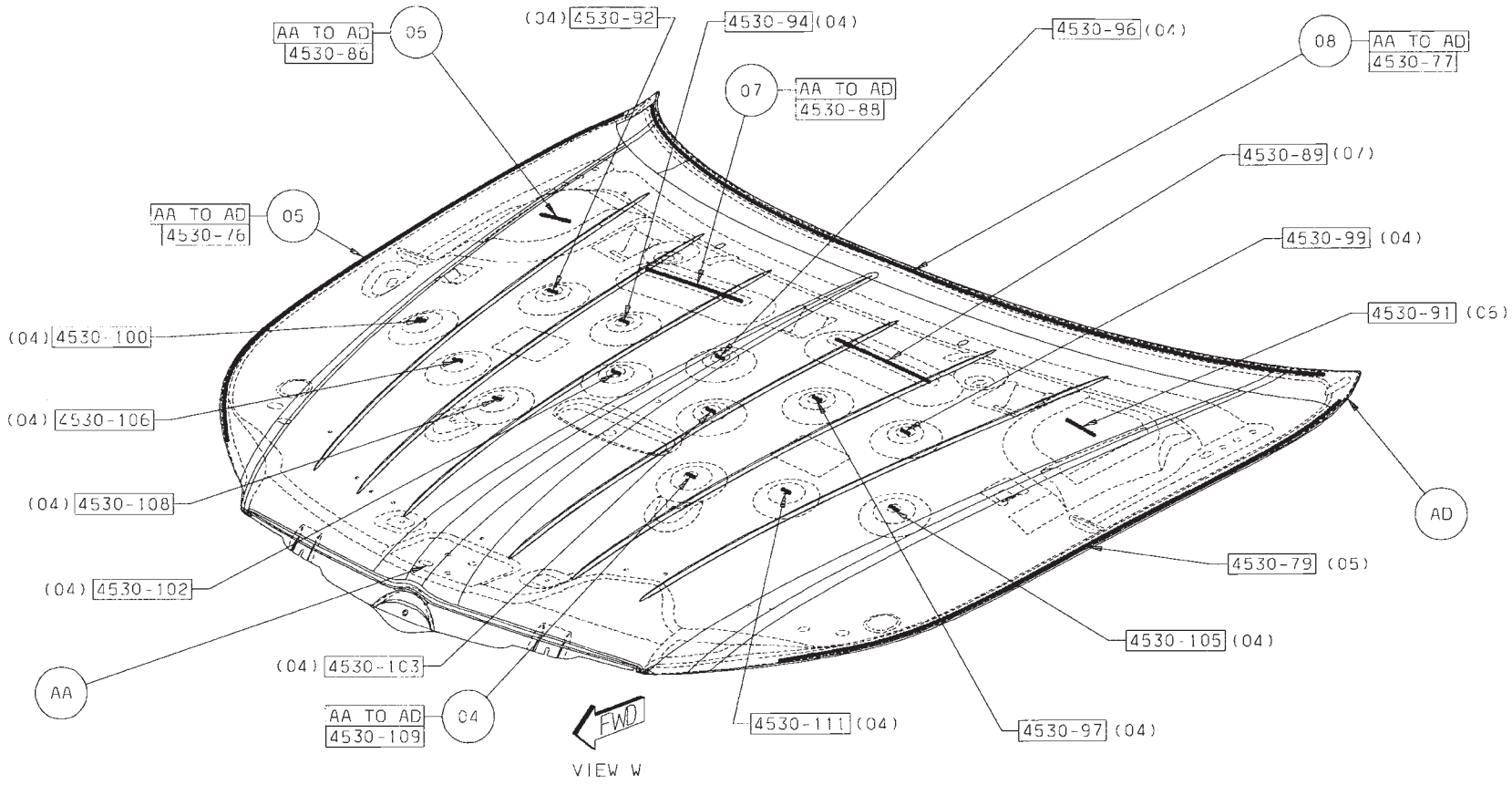

Back to Index

INTRODUCTION

Chrysler Sebring
Dodge Avenger

This manual has been prepared for use by all body technicians involved in the repair of the Chrysler Sebring and Dodge Avenger.

This manual shows:
- Typical panels contained in these vehicles
- The weld locations for these panels
- The types of welds for the panel
- Proper sealer types and correct locations

INTRODUCTION

Chrysler Sebring Convertible

This manual has been prepared for use by all body technicians involved in the repair of the Chrysler Sebring Convertible.

This manual shows:

- Typical panels contained in these vehicles
- The weld locations for these panels
- The types of welds for the panel
- Proper sealer types and correct locations

MANUFACTURER ADVERTISEMENTS

- **CHRYSLER LLC NON-STRUCTURAL SHEET METAL REPAIR MANUAL**
- **CHRYSLER LLC PAINT CONDITION DECK, SEALER SOUND DEADENER REPAIR GUIDE**
- **CHRYSLER LLC PLASTIC REPAIR GUIDE, WELDING & WELD BONDING MANUAL**
- **HEMI.COM**
- **MOPAR PARTS**
- **SHERWIN-WILLIAMS**
- **TEAM PSE FACILITY PLANNING SERVICES, CHRYSLER LLC REFINISH PAINT SUPPLIERS AND PAINT MATERIALS/SYSTEMS**
- **TECH AUTHORITY**

Copies of the following Body Repair Manuals are available by calling 1-800-890-4038

- Chrysler 300 (81-316-0531CD)
- Chrysler Pacifica (81-316-0530-CD)
- Chrysler PT Convertible (81-316-0531-CD)
- Chrysler Sebring/Dodge Avenger (81-316-0734CD)
- Dodge Caliber (81-316-0737CD)
- Dodge Dakota (81-316-0634CD)
- Dodge Durango (81-316-0430CD)
- Dodge Nitro (81-316-0741CD)
- Dodge Ram (81-316-0739-CD)
- Dodge Sprinter Van (81-316-0533-CD)
- Jeep Compass (81-316-0738-CD)
- Jeep Grand Cherokee (81-316-0635-CD)
- Jeep Patriot (81-316-0740CD)
- Jeep Wrangler (81-316-0742CD)

Back to Index

CHRYSLER Jeep SERVICE

Stick with the Specialists®

NON-STRUCTURAL SHEET METAL REPAIR MANUAL

Back to Index

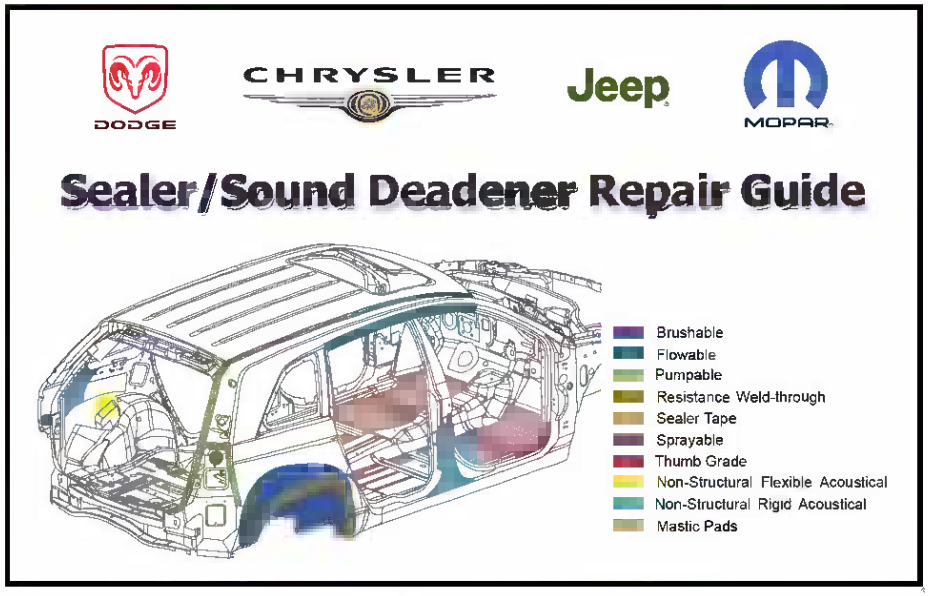

Publication # 81-316-0731

Publication # 81-316-0507

Additional copies of these publications are available by calling.
1-800-890-4038

Back to Index

Publication Number
81-316-0711

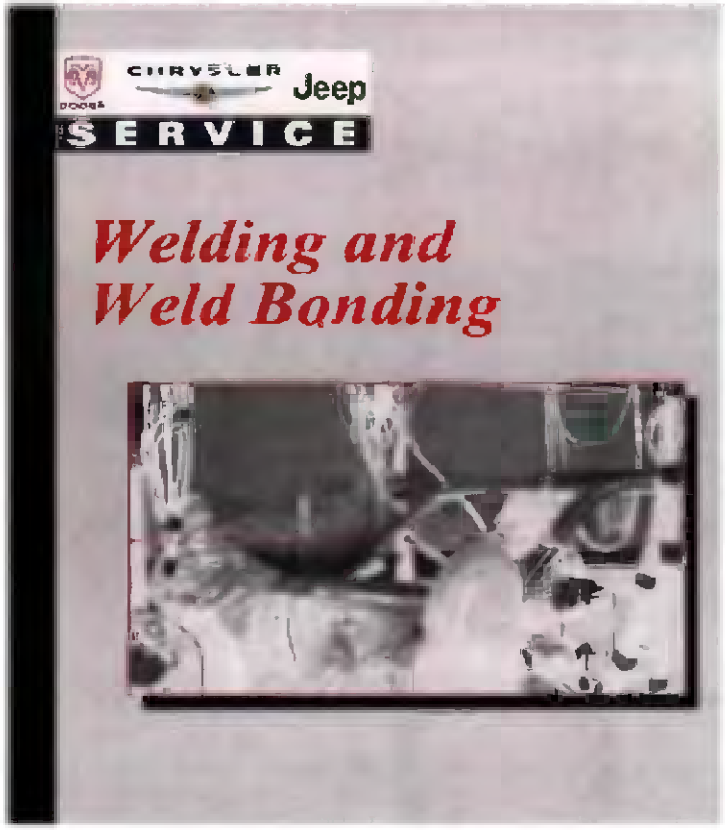

Publication Number
81-316-0740

Additional copies may be ordered by calling
1-800-890-4038

Back to Index

HEMI.com, the official Chrysler LLC HEMI® Web site.

Learn about the history of the early HEMI®, built by Chrysler, DeSoto, and Dodge. Get all the details on the 426 HEMI on the street and in race cars, from NASCAR stock cars at Daytona and Darlington, to NHRA Super Stock, Funny Cars, and Top Fuel dragsters. Meet the engineers who designed the original HEMI, the 426 HEMI and the new 5.7 HEMI. Learn how Don Garlits and other legendary racers adopted the 331, 354, 392, and finally the 426 Hemi as they set records year after year.

Back to Index

AUTHENTIC PERFORMANCE™

MOPAR

DON'T GET CAUGHT WITH YOUR TOP DOWN.

2008 SEBRING CONVERTIBLE

When you meet your Chrysler Sebring Convertible customers by accident, make sure they get back on the sunny side of the street by using only Authentic Mopar Collision Repair Parts. Think aftermarket or salvage products are just as good? Think again. Only Mopar Collision Repair Parts are the factory original products for Chrysler, Dodge and Jeep® vehicles.

When you specify Mopar Collision Repair Parts you get precise fit and finish, superior corrosion protection and good looks for the long haul. And because Mopar Collision Repair Parts install more easily and quickly than aftermarket products, you'll cut your cycle time and boost profits. Quality, immediate availability, competitive prices and lifetime limited warranty. It all adds up to the best overall value for your Chrysler Sebring customers.

Do a bang up job. Call your local Chrysler dealer today to get all the Mopar Collision Repair Parts you need from one trusted source.

CHRYSLER

Back to Index

Addition by Subtraction

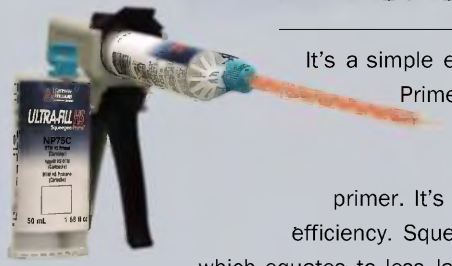

It's a simple equation: Using the right tool for the job adds up to a stronger bottom line. The new NP75C Squeegee Prime from Sherwin-Williams Automotive Finishes is the first ever direct to metal spreadable primer that you can apply like body filler or glazing putty.

There's no mixing, no masking, no spraying and no clean up with this DTM high solids ISO-free primer. It's packaged in a dual chambered cartridge and delivered through a static mixing tube for 100% transfer efficiency. Squeegee Prime provides excellent bare metal adhesion, corrosion protection and filling properties, which equates to less labor and increased profits for you.

Put the best finish on your bottom line with Sherwin-Williams.

SHERWIN-WILLIAMS.
Automotive Finishes

Back to Index

Back to Index

Tech Authority Website contains the most complete listings, descriptions, and ordering information for Chrysler LLC service information materials. The materials included in Tech Authority cover every aspect of repairing and maintaining Chrysler, Plymouth, Dodge, Dodge Truck and Jeep® vehicles.

Tech Authority is an extensive online catalogue of Diagnostic procedure manuals, student reference Books, tech training programs, owner's manuals, Service manuals, and technical service bulletin Manuals. The materials range from written and Illustrated books to the highly acclaimed Master Tech Video series.

By Telephone: Monday - Friday, 8:00-4:30 E.S.T.

Telephone orders may be placed at the number below. Credit cards are accepted (no COD's). Please have your Order information available at time of call.

By Phone: (800) 890-4038
By Fax: (440) 572-0815

Visit our website at:
www.techauthority.com

Back to Index

CHRYSLER SEBRING MISCELLANEOUS BODY SECTION

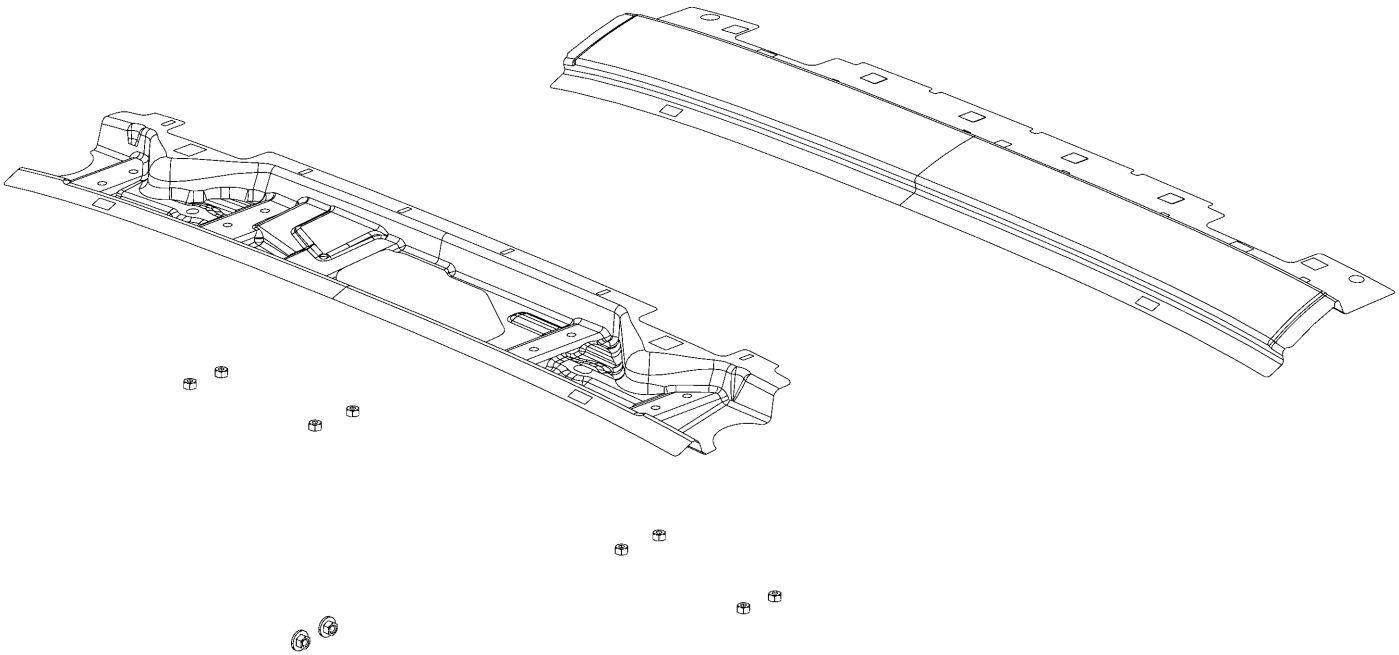

AA FRAME – WINDSHIELD HEADER LWR -
AB FRAME – WINDSHIELD HEADER UPR -
AC NUT/WELD.HEX – NO.FIN – HEADER TO PRESENTER PLATE

Back to Index

PARTS IDENTIFICATION LEGEND, OVERVIEW 15

AA FRAME – WINDSHIELD HEADER LWR -
AB FRAME – WINDSHIELD HEADER UPR -
AC NUT/WELD.HEX – NO.FIN – HEADER TO PRESENTER PLATE

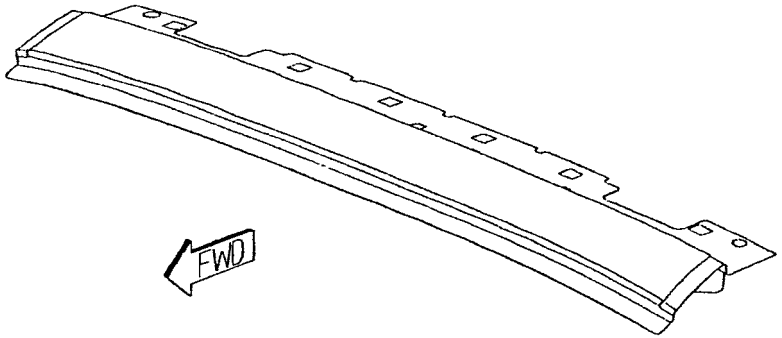

Back to Index

WELD LAYOUT LOCATION GUIDE

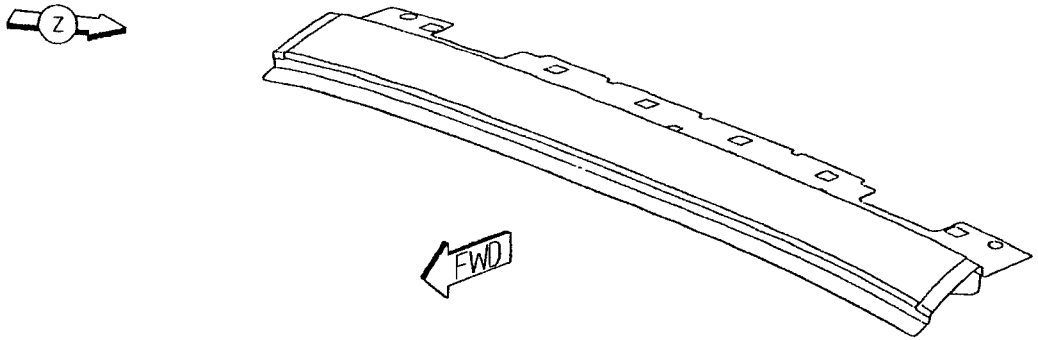

Back to Index

01 AC TO AB 8 PROJ WELDS
02 AB TO AA 35 S/WELDS (ORD)

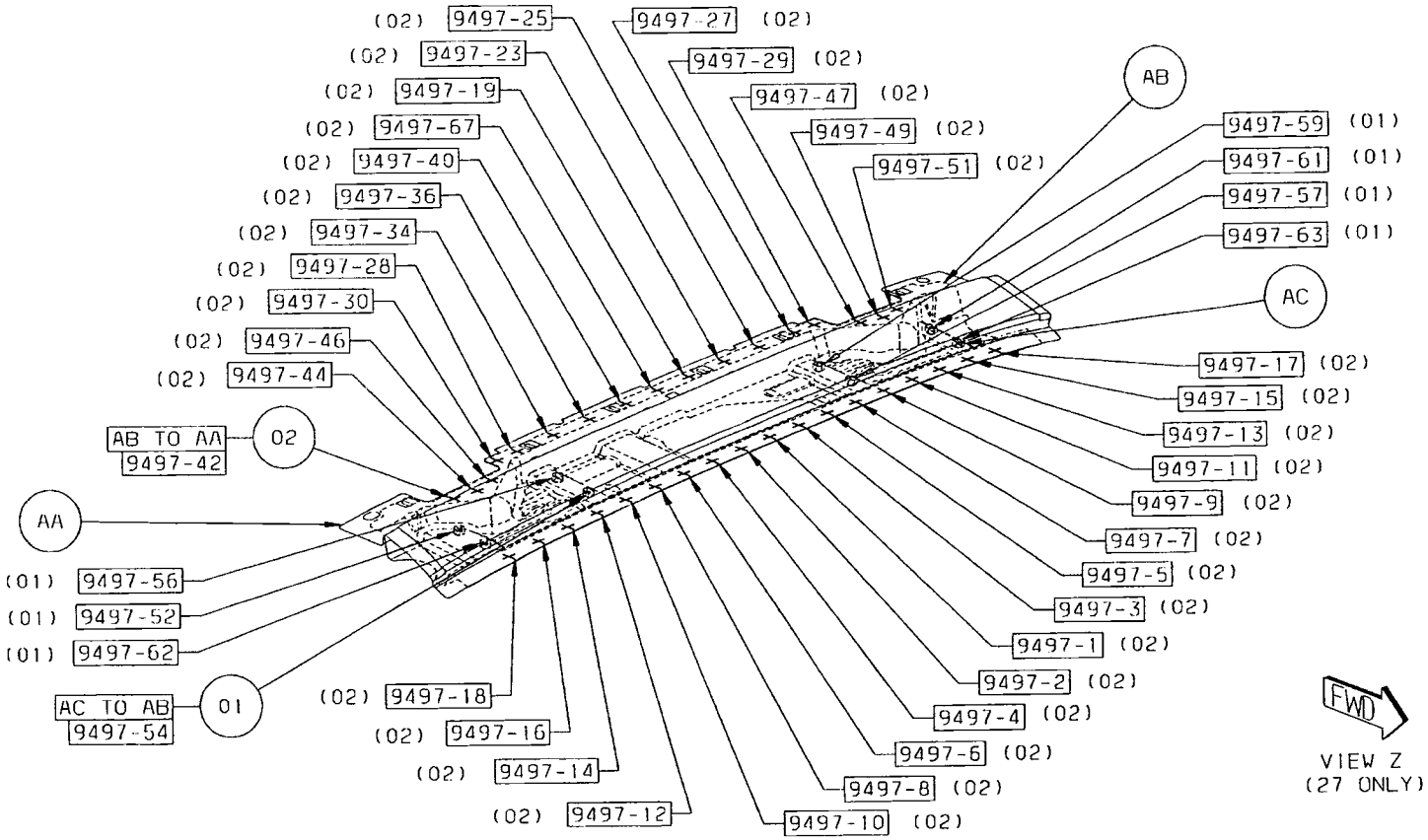

Back to Index

CHRYSLER SEBRING MISCELLANEOUS UNDERBODY SECTION

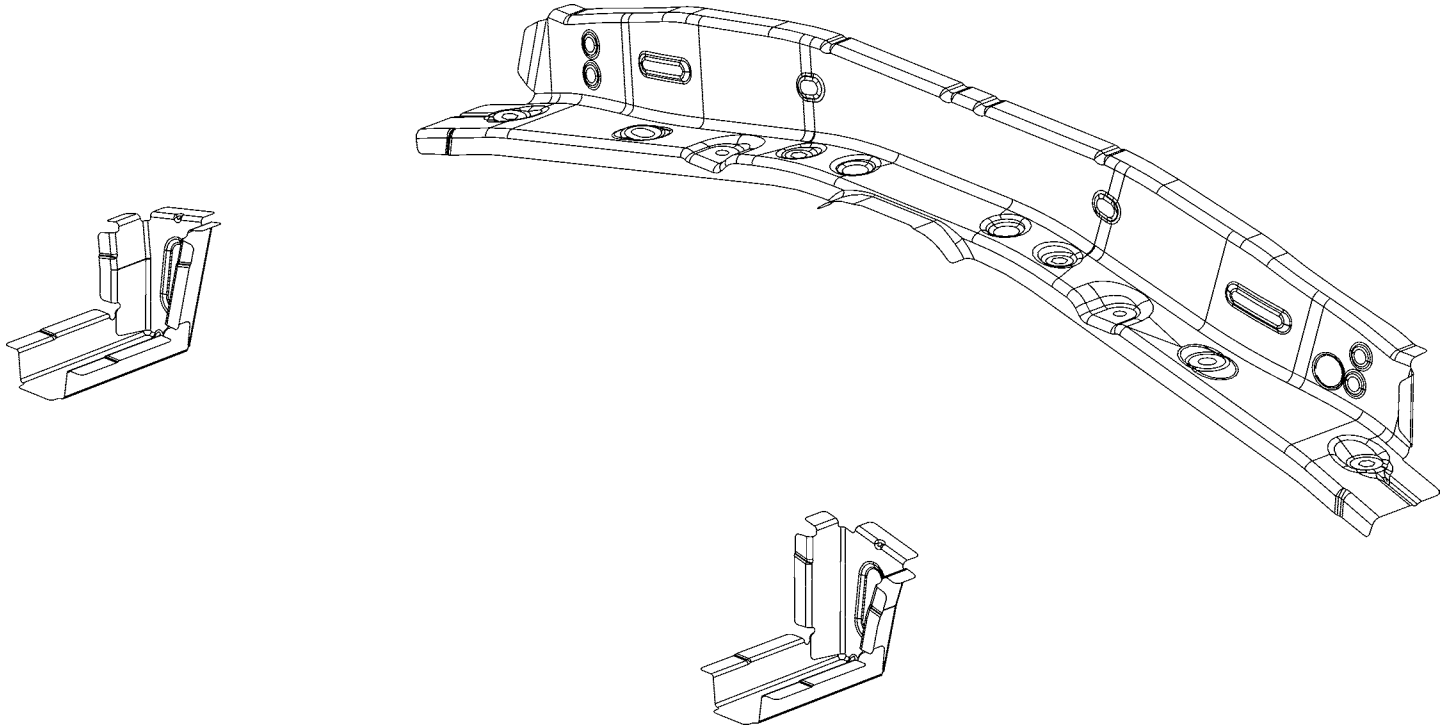

AA CROSSMEMBER - RR SEAT -
AB EXTENSION - SIDEMEMBER FRT FLOOR LT -
AB EXTENSION - SIDEMEMBER FRT FLOOR RT -
AC NUT/WELD.HEX - NIBS.NO.FIN -SIDEMEMBER TO CROSSBRACE
AD STUD.WELD/EXTERNAL - HEADER.PT.PNT.CUTTER.SPECIAL - QTR INR REINF BRKT TO RR RAIL ASSY

Back to Index

PARTS IDENTIFICATION LEGEND, OVERVIEW 11

AA CROSSMEMBER - RR SEAT -
AB EXTENSION - SIDEMEMBER FRT FLOOR LT -
AB EXTENSION - SIDEMEMBER FRT FLOOR RT -
AC NUT/WELD.HEX - NIBS.NO.FIN -SIDEMEMBER TO CROSSBRACE
AD STUD.WELD/EXTERNAL - HEADER.PT.PNT.CUTTER.SPECIAL - QTR INR REINF BRKT TO RR RAIL ASSY

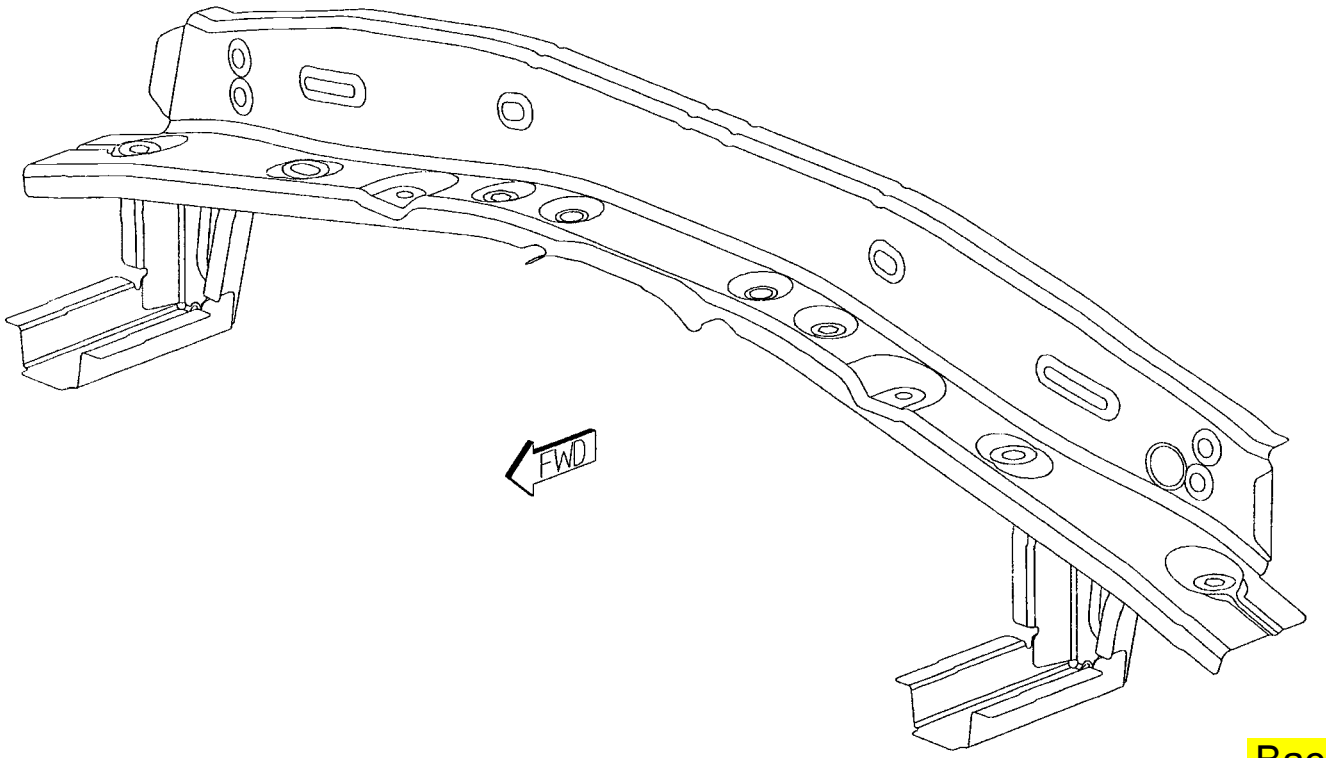

Back to Index

WELD LAYOUT LOCATION GUIDE

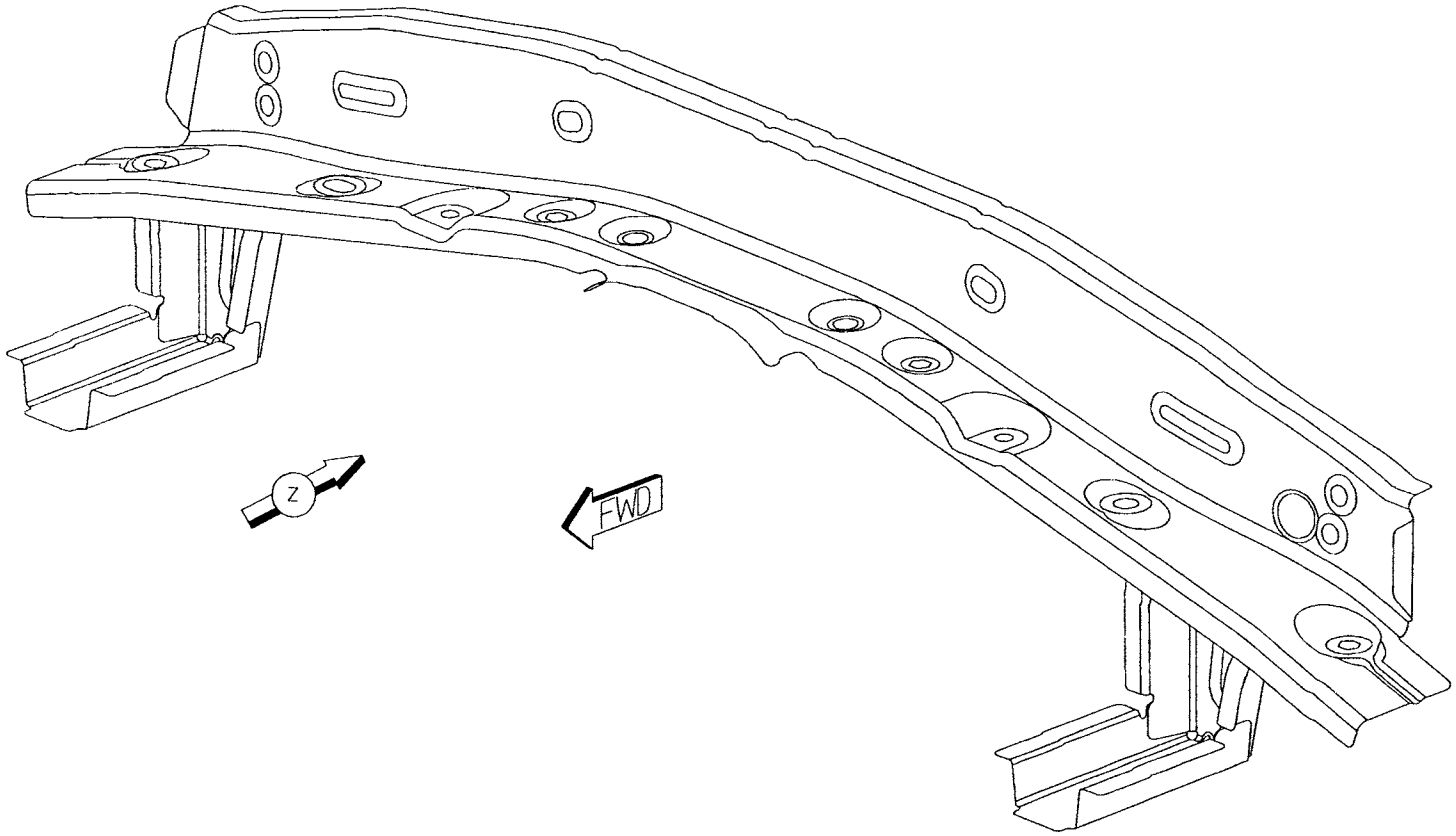

Back to Index

01 AB TO AB 8 S/WELDS (ORD)
02 AB TO AA 8 S/WELDS (ORD)
03 AC TO AA 2 PROJ WELDS
04 AD TO AA 1 PROJ WELDS

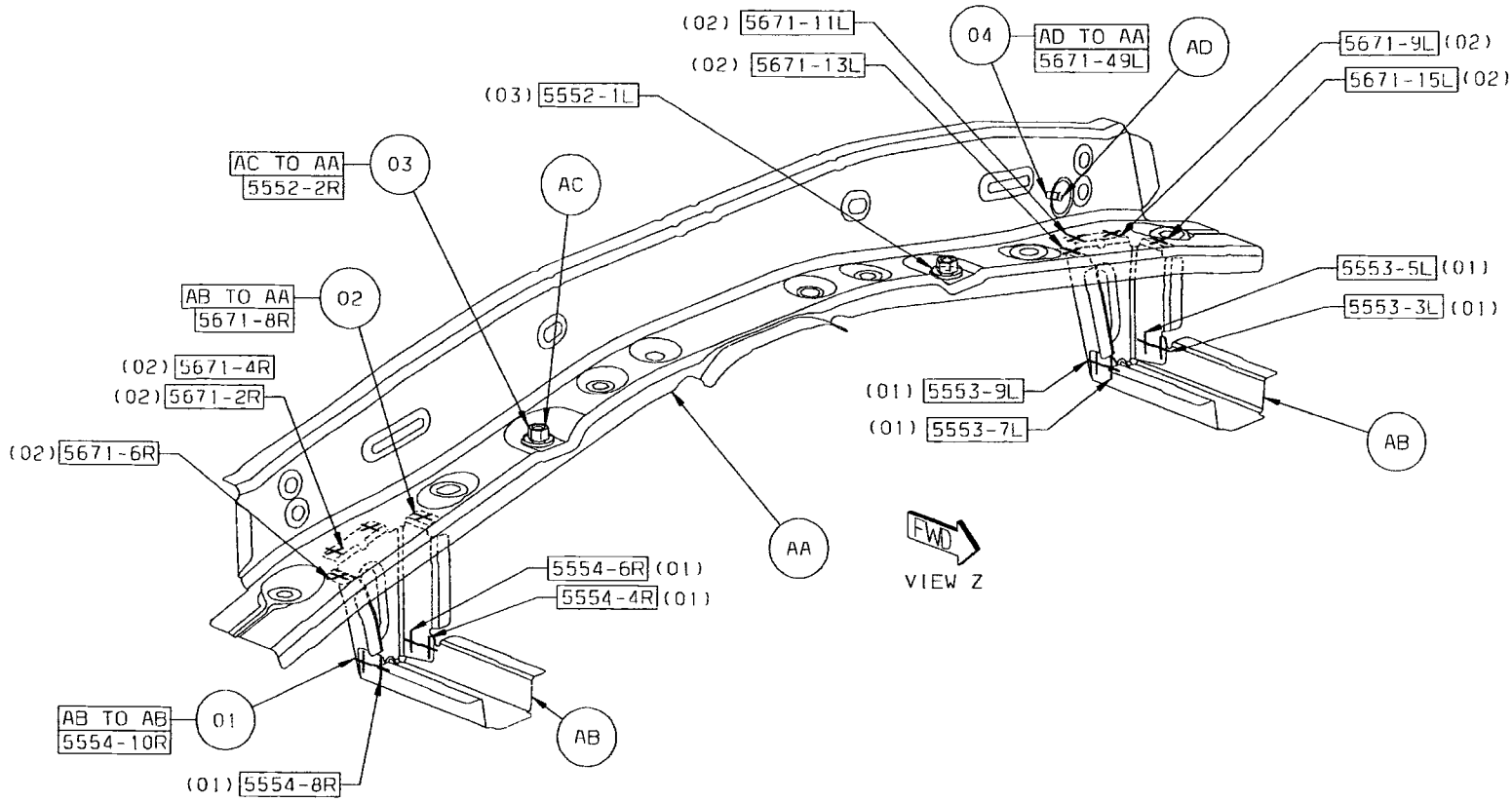

Back to Index

CHRYSLER SEBRING/DODGE AVENGER MISCELLANEOUS UNDERBODY (COMMON) SECTION

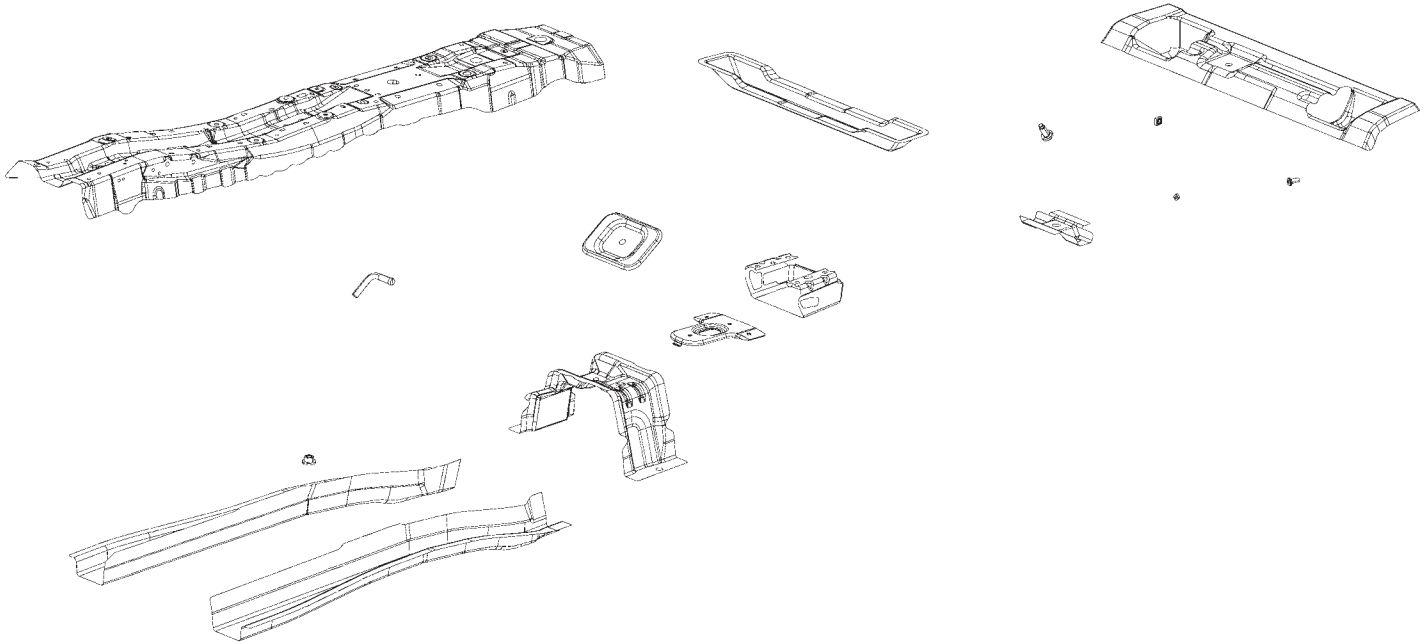

AA PANEL – COWL SIDE RT –
AA PANEL – COWL SIDE LT –
AB TAPPING PLATE –
AB TAPPING PLATE –
AC NUT.WELD/HEX – NO.FIN – AMPLIFIER TO RT COWL SIDE PNL ASSY
AD STUD.WELD/EXTERNAL – HEADER.PT.NO.FIN.SPECIAL – ELECTRICAL GROUND TO BODY
AD STUD.WELD/EXTERNAL – HEADER.PT.NO.FIN.SPECIAL – ELECTRICAL GROUND TO BODY
AE REINF – TUNNEL –
AF BRACKET – RR SEAT ATTACHMENT –
AG BRACKET – RR SEAT ATTACHMENT –
AH EXTENSION – RR FLOOR –
AJ CROSSMEMBER – RR SEAT –
AK NUT/WELD.HEX – NIBS.NO.FIN – STA PLATE TO PNL EXT
AL RELIEF – TUNNEL –
AM STUD.WELD/EXTERNAL – HEADER.PT.CUTTER.SPECIAL – BRAKE BUNDLE TO RR SEAT C/MBR
AN EXTENSION – SIDEMEMBER FRT FLOOR LT –
AP A.STUD.WELD-INTERNAL-NIBS.NO.F1
AR REINF – RR SEAT MOUNTING –
AS REINF – RR SEAT BELT –
AT BRACKET – RR SEAT – NONE
AU BRACKET – RR FLOOR PAN SPARE WHEEL ANCHOR –
AV CROSSMEMBER – RR FLOOR RR –
AW NUT/WELD.HEX – NIBS.NO.FIN – RR SEAT TO RR RAIL

Back to Index

PARTS IDENTIFICATION LEGEND, OVERVIEW 12

AA PANEL – COWL SIDE RT –
AA PANEL – COWL SIDE LT –
AB TAPPING PLATE –
AB TAPPING PLATE –
AC NUT.WELD/HEX – NO.FIN – AMPLIFIER TO RT COWL SIDE PNL ASSY
AD STUD.WELD/EXTERNAL – HEADER.PT.NO.FIN.SPECIAL – ELECTRICAL GROUND TO BODY
AD STUD.WELD/EXTERNAL – HEADER.PT.NO.FIN.SPECIAL – ELECTRICAL GROUND TO BODY
AE REINF – TUNNEL –
AF BRACKET – RR SEAT ATTACHMENT –
AG BRACKET – RR SEAT ATTACHMENT –
AH EXTENSION – RR FLOOR –
AJ CROSSMEMBER – RR SEAT –
AK NUT/WELD.HEX – NIBS.NO.FIN – STA PLATE TO PNL EXT
AL RELIEF – TUNNEL –
AM STUD.WELD/EXTERNAL – HEADER.PT.CUTTER.SPECIAL – BRAKE BUNDLE TO RR SEAT C/MBR
AN EXTENSION – SIDEMEMBER FRT FLOOR LT –
AP A.STUD.WELD-INTERNAL-NIBS.NO.F1
AR REINF – RR SEAT MOUNTING –
AS REINF – RR SEAT BELT –
AT BRACKET – RR SEAT – NONE
AU BRACKET – RR FLOOR PAN SPARE WHEEL ANCHOR –
AV CROSSMEMBER – RR FLOOR RR –
AW NUT/WELD.HEX – NIBS.NO.FIN – RR SEAT TO RR RAIL

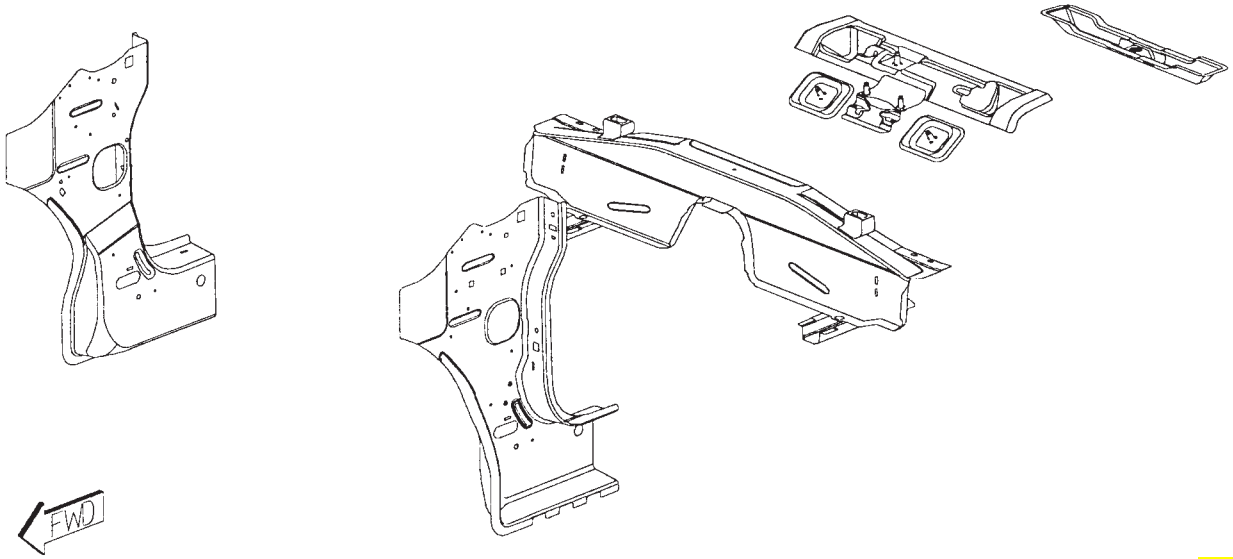

Back to Index

WELD LAYOUT LOCATION GUIDE

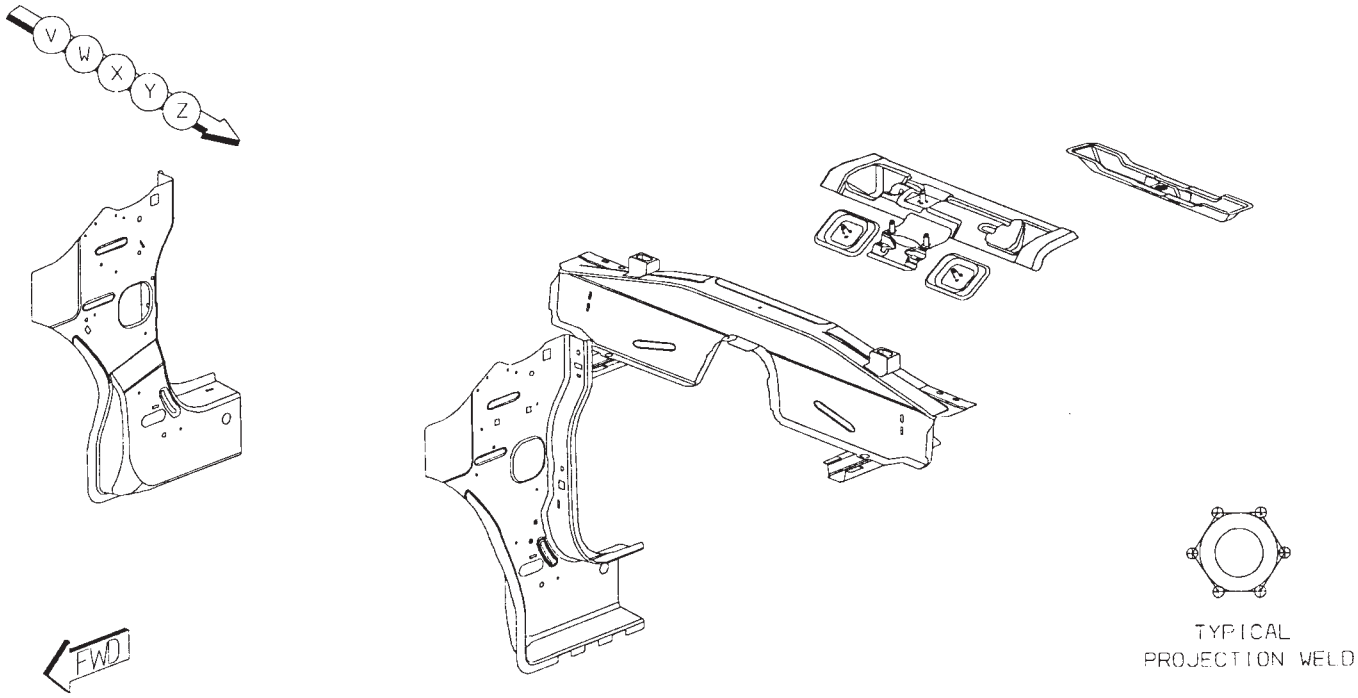

Back to Index

01 AB TO AA 4/SD S/WELDS (ORD)
02 AC TO AA 3 PROJ WELDS
03 AD TO AA 1/SD PROJ WELD

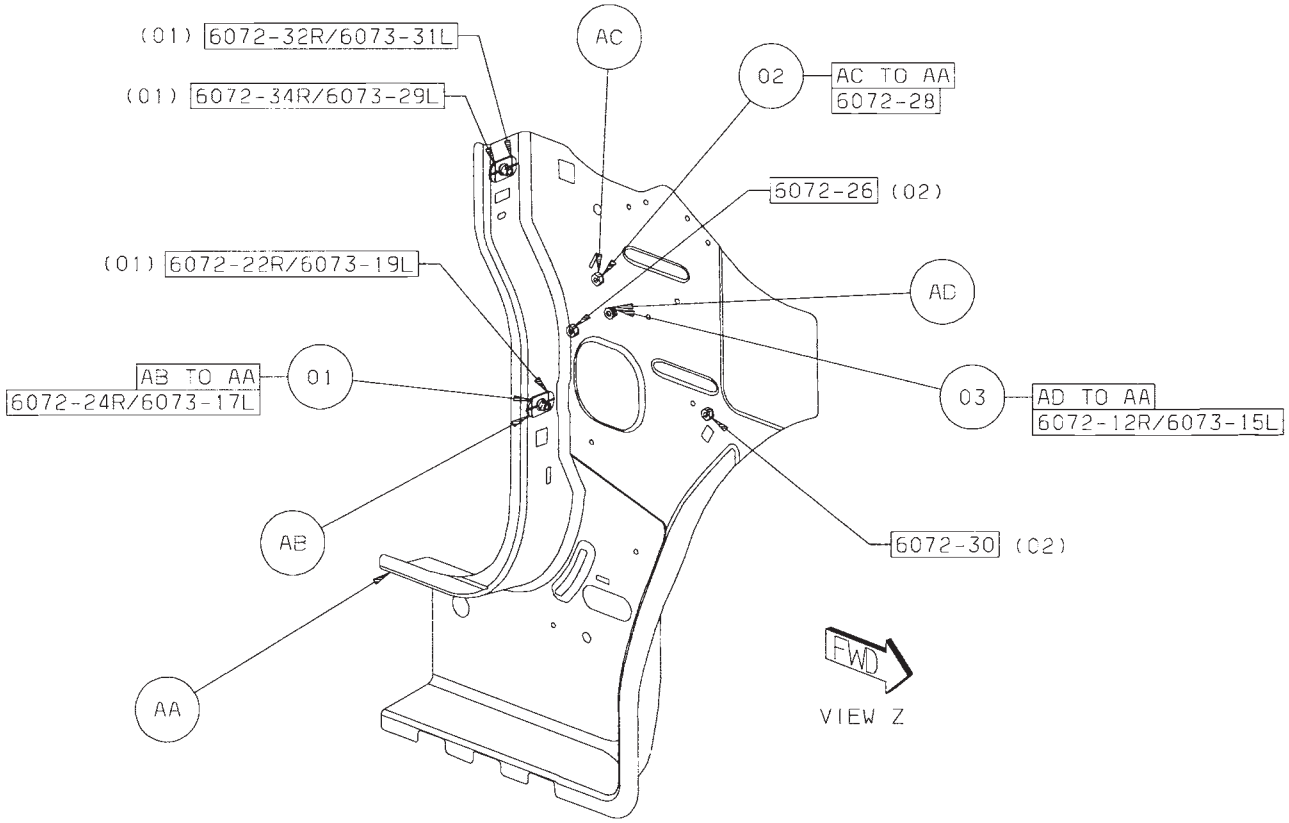

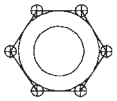

TYPICAL
PROJECTION WELD

Back to Index

04 AF TO AE 2 S/WELDS (ORD)
05 AG TO AE 2 S/WELDS (ORD)
06 AH TO AE 14 S/WELDS (ORD)

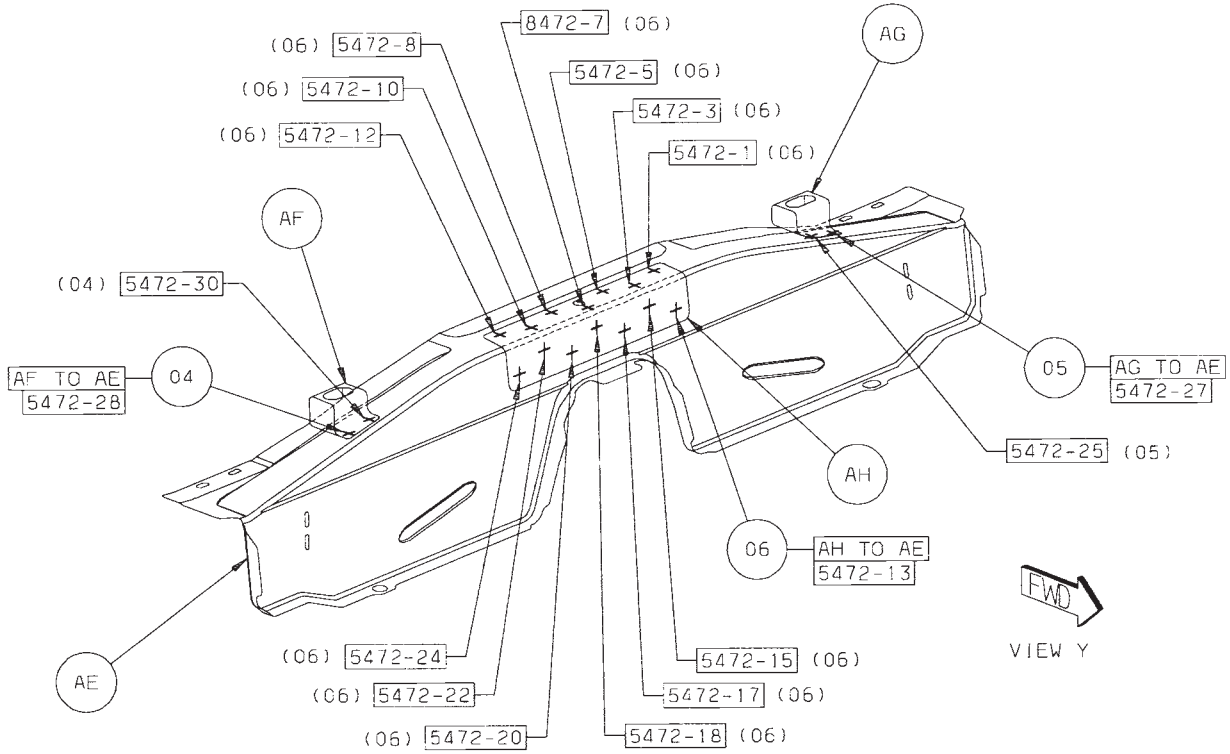

Back to Index

07 AN TO AJ 8 S/WELDS (ORD)
08 AK TO AJ 2 S/WELDS (ORD)
09 AL TO AJ 19 S/WELDS (ORD)
10 AM TO AJ 1 PROJ WELD
11 AN TO AN 8 S/WELDS (ORD)

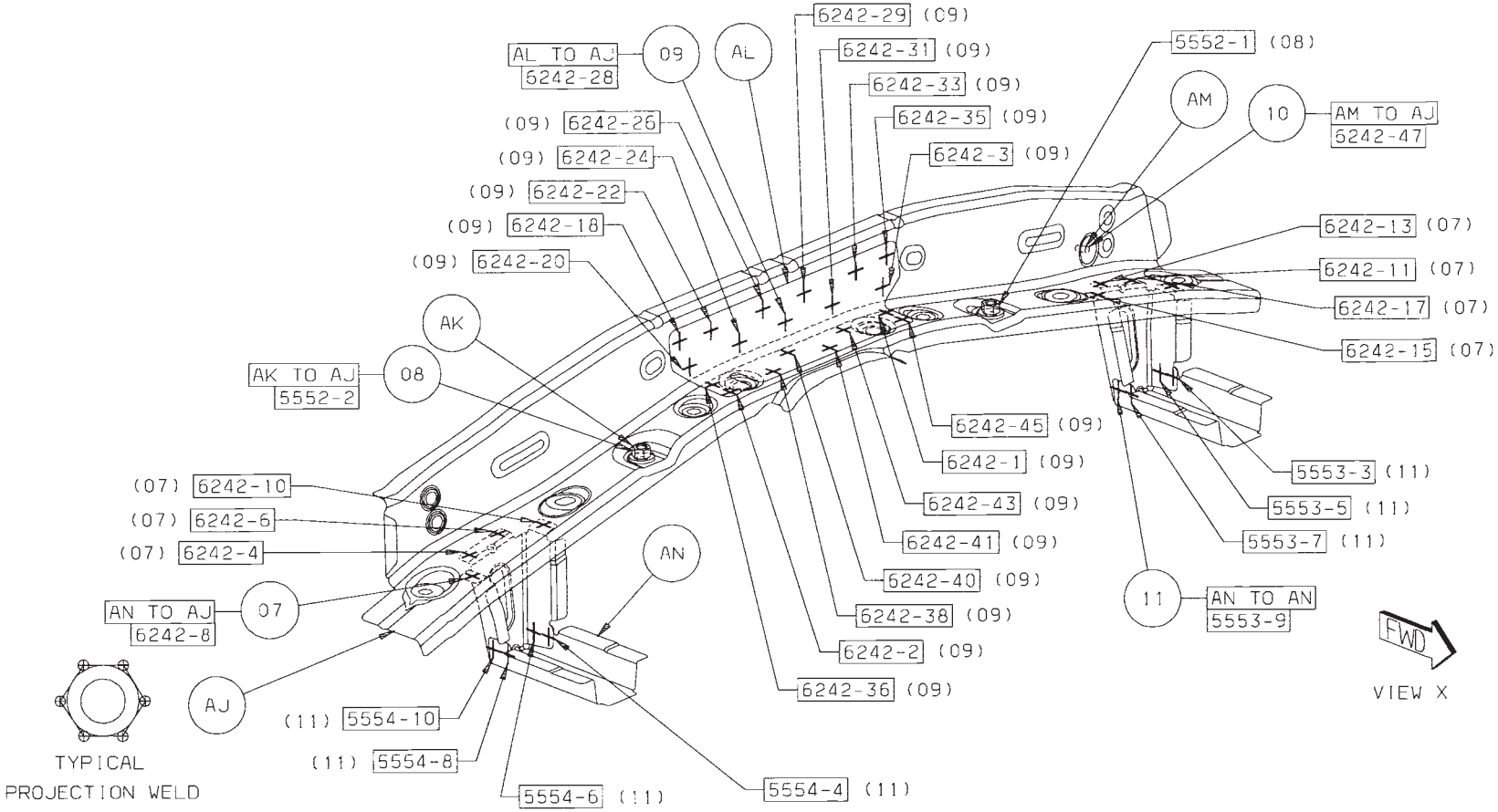

Back to Index

12 AP TO AR 1 PROJ WELD
13 AP TO AS 2 PROJ WELDS (SAF)
14 AP TO AT 2 PROJ WELDS

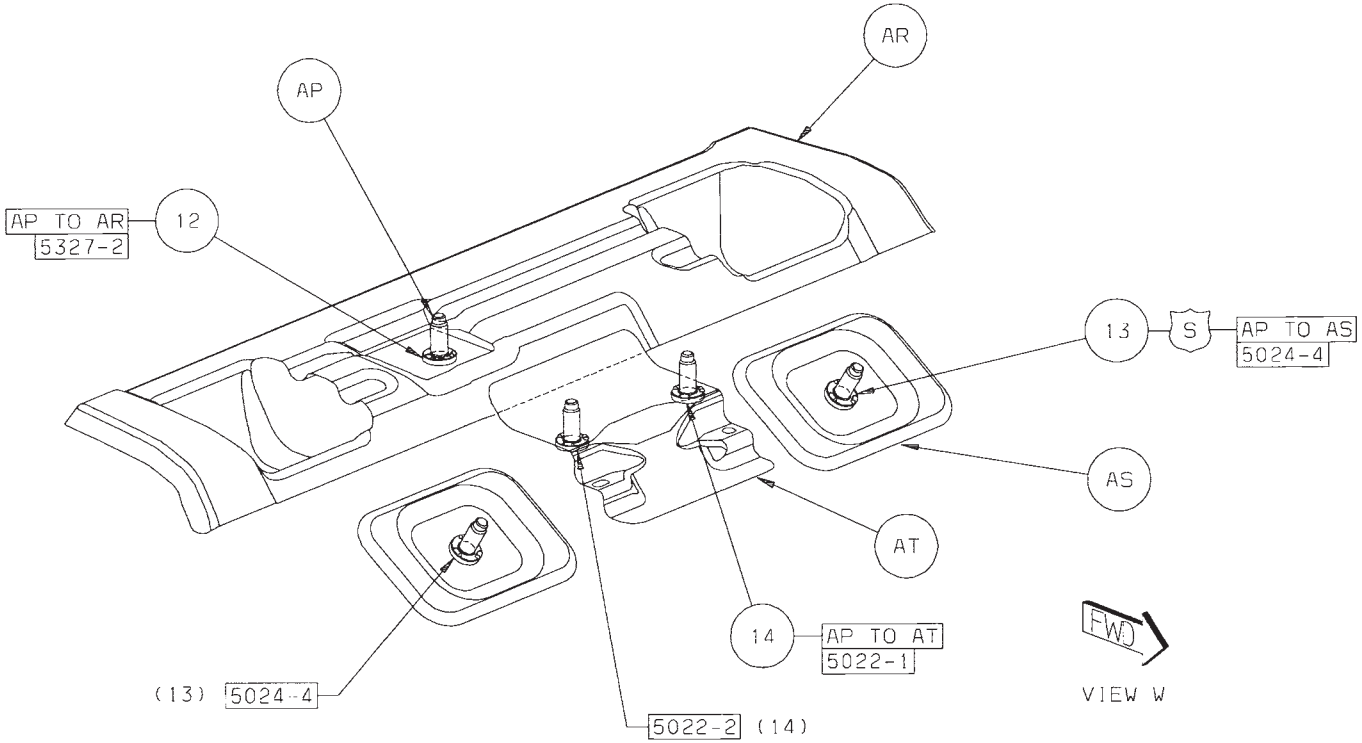

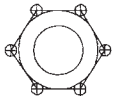

TYPICAL
PROJECTION WELD

Back to Index

15 AU TO AV 8 PROJ WELDS (CRT)
16 AW TO AU 1 PROJ WELD

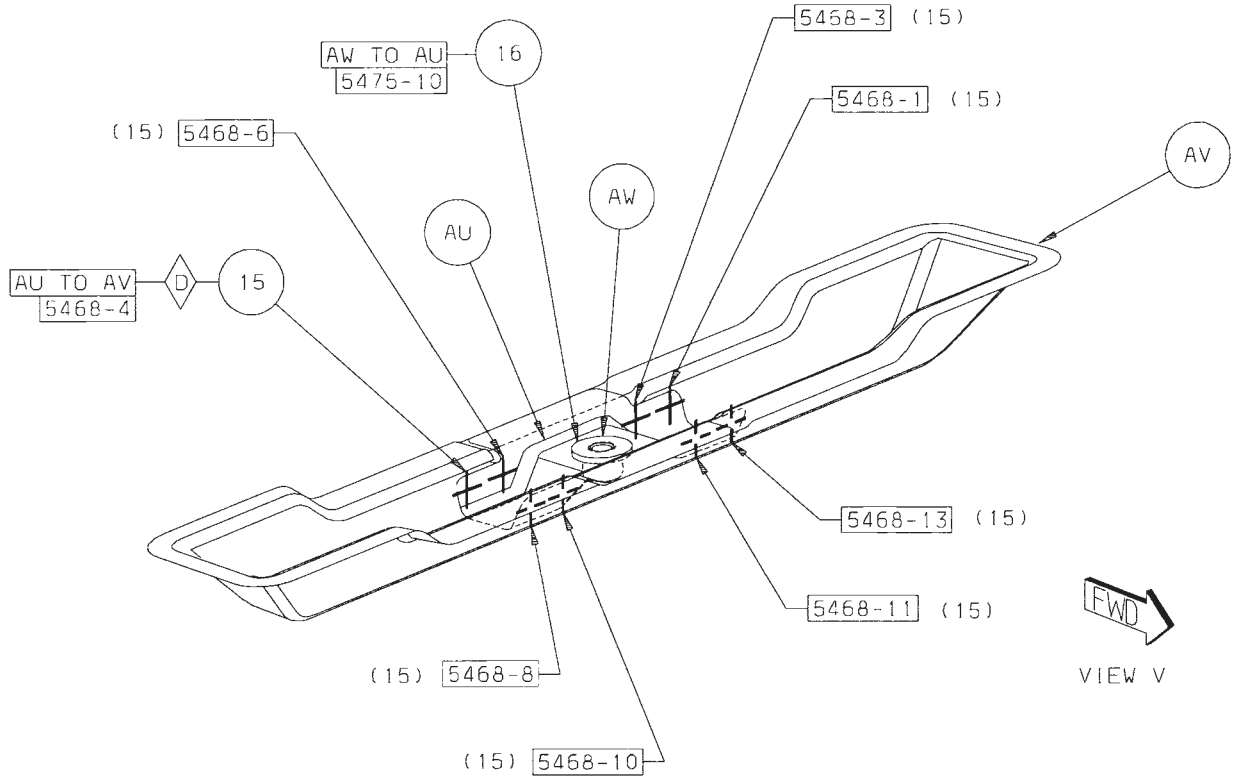

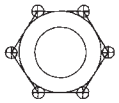

TYPICAL
PROJECTION WELD

Back to Index

WELD LOCATION OVERVIEW ZONES

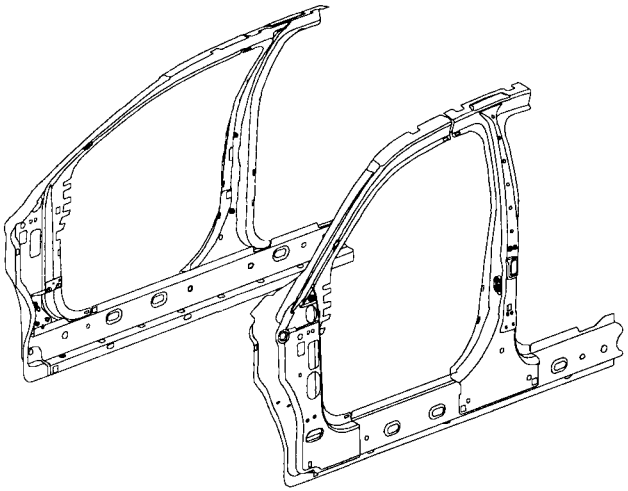

OVERVIEW 14

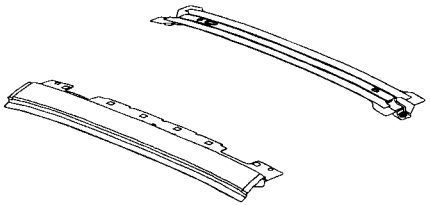

OVERVIEW 15

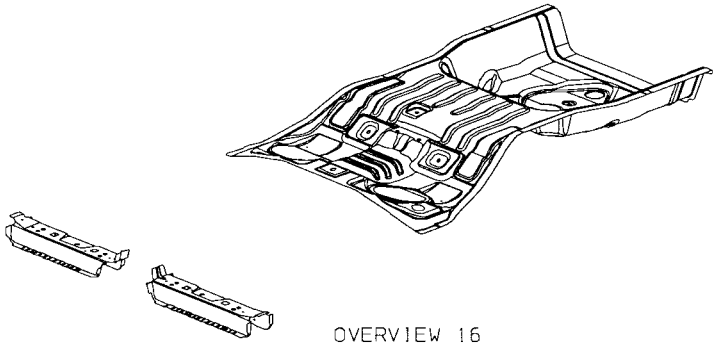

OVERVIEW 16

Back to Index

CHRYSLER SEBRING/DODGE AVENGER BODY SIDE APERTURE (COMMON) SECTION

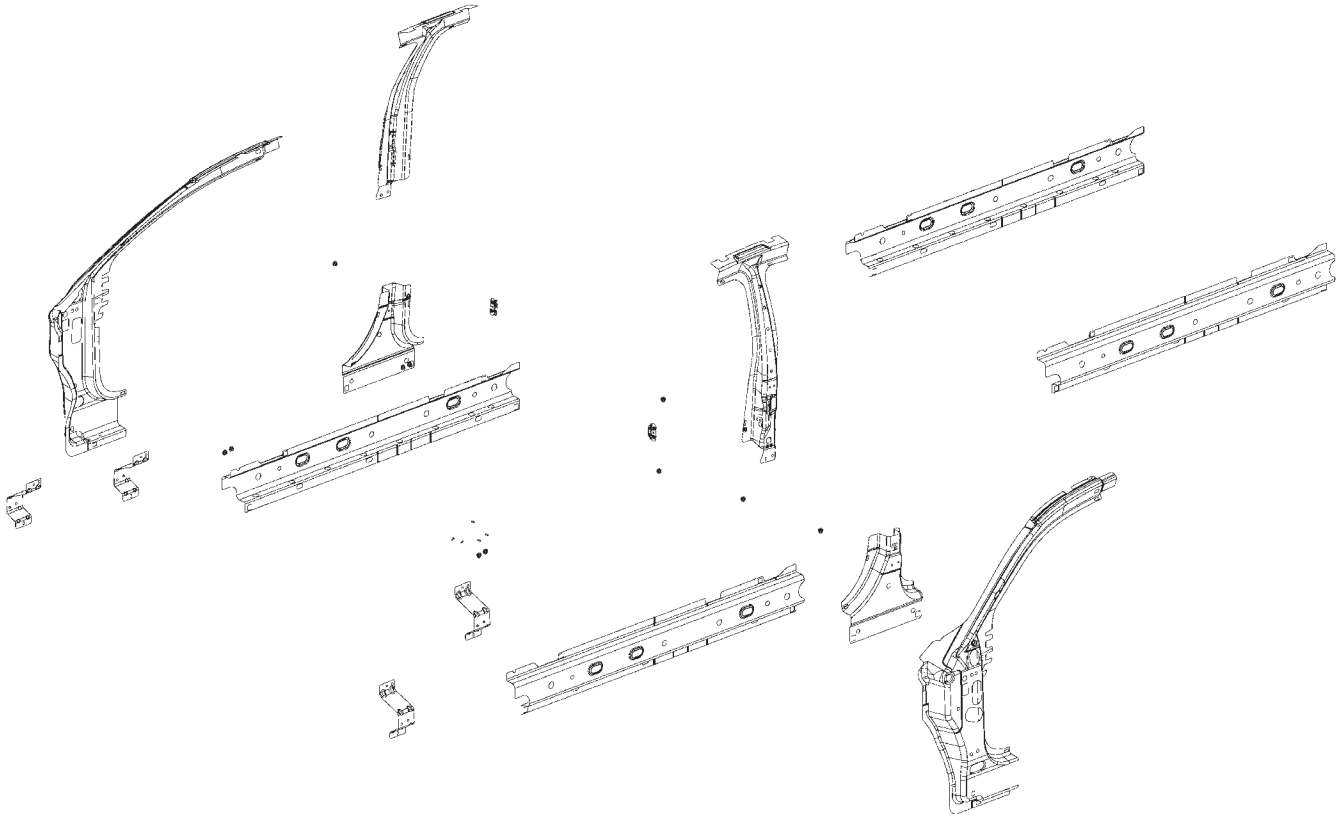

AA SILL – OTR RT –
AA SILL – OTR LT –
AB NUT/WELD.HEX – NIBS.NO.FIN – B-PILLAR OUTERS
AB NUT/WELD.HEX – NIBS.NO.FIN – B-PILLAR OUTERS
AB NUT/WELD.HEX – NIBS.NO.FIN – HINGE TO B-PILLAR
AB NUT/WELD.HEX – NIBS.NO.FIN – HINGE TO B-PILLAR
AB NUT/WELD.HEX – NIBS.NO.FIN – HINGE MOUNTING TO REINF
AB NUT/WELD.HEX – NIBS.NO.FIN – HINGE MOUNTING TO REINF
AC REINF – HINGE PILLAR LWR RT –
AC REINF – HINGE PILLAR LWR LT –
AD PANEL – HINGE PILLAR RT –
AD PANEL – HINGE PILLAR LT –
AE REINF – B-PILLAR LWR & SILL RT –
AE REINF – B-PILLAR LWR & SILL LT –
AF PANEL – B-PILLAR RT –
AF PANEL – B-PILLAR LT –

Back to Index

PARTS IDENTIFICATION LEGEND, OVERVIEW 14

AA SILL – OTR RT –
AA SILL – OTR LT –
AB NUT/WELD.HEX – NIBS.NO.FIN – B-PILLAR OUTERS
AB NUT/WELD.HEX – NIBS.NO.FIN – B-PILLAR OUTERS
AB NUT/WELD.HEX – NIBS.NO.FIN – HINGE TO B-PILLAR
AB NUT/WELD.HEX – NIBS.NO.FIN – HINGE TO B-PILLAR
AB NUT/WELD.HEX – NIBS.NO.FIN – HINGE MOUNTING TO REINF
AB NUT/WELD.HEX – NIBS.NO.FIN – HINGE MOUNTING TO REINF
AC REINF – HINGE PILLAR LWR RT –
AC REINF – HINGE PILLAR LWR LT –
AD PANEL – HINGE PILLAR RT –
AD PANEL – HINGE PILLAR LT –
AE REINF – B-PILLAR LWR & SILL RT –
AE REINF – B-PILLAR LWR & SILL LT –
AF PANEL – B-PILLAR RT –
AF PANEL – B-PILLAR LT –

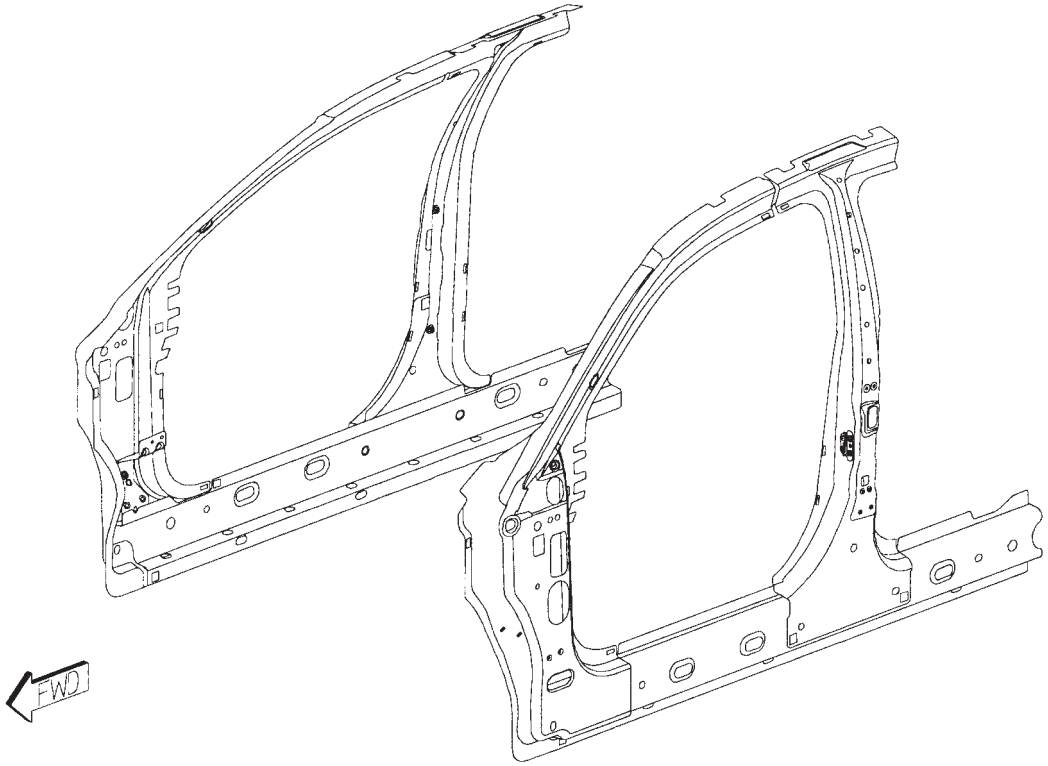

Back to Index

WELD LAYOUT LOCATION GUIDE

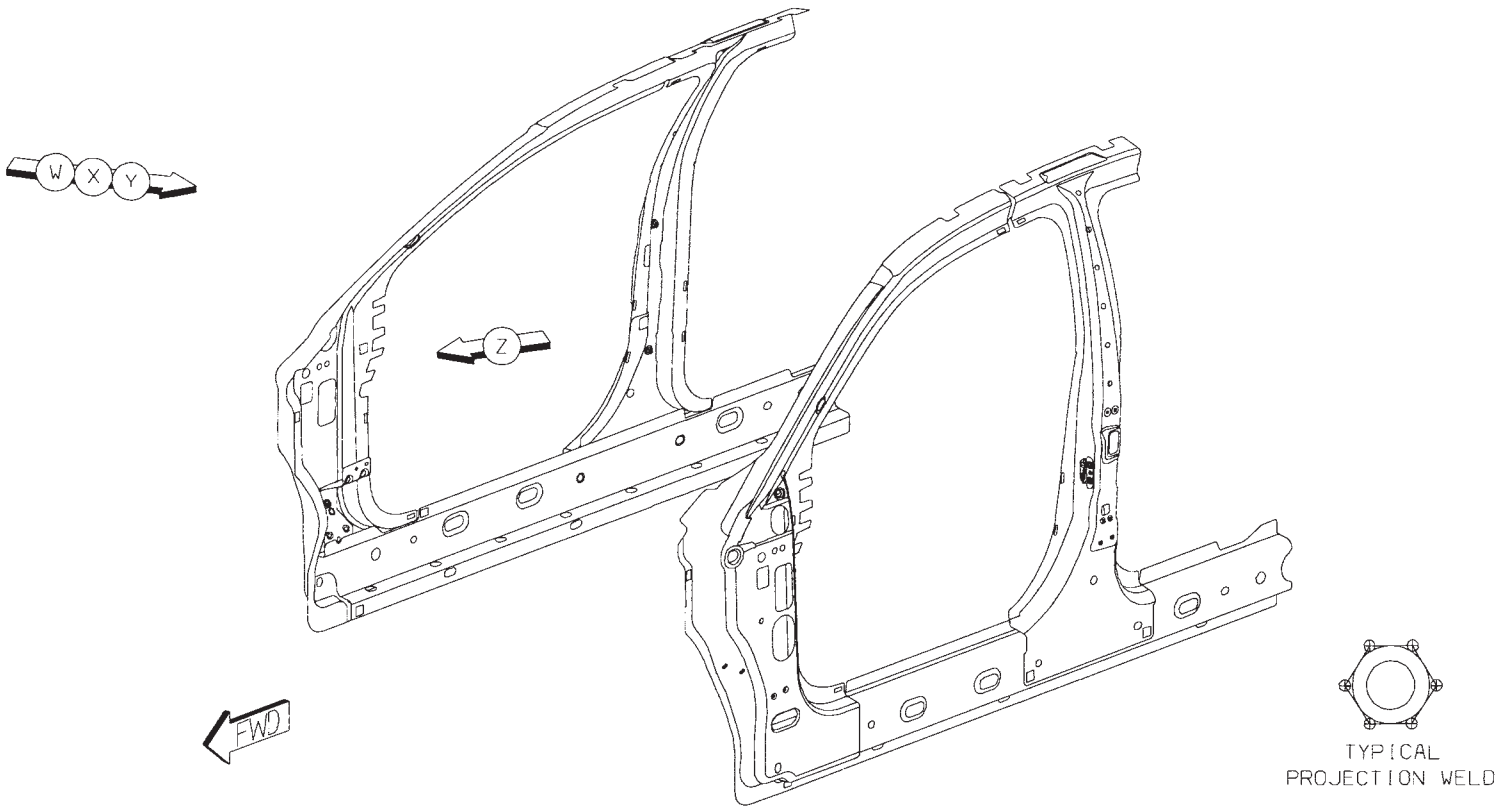

Back to Index

01 AD TO AA 12/SD S/WELDS (ORD)
02 AC TO AA 2/SD S/WELDS (ORD)
03 AB TO AC 2/SD PROJ WELDS
04 AC TO AD 2/SD S/WELDS (ORD)

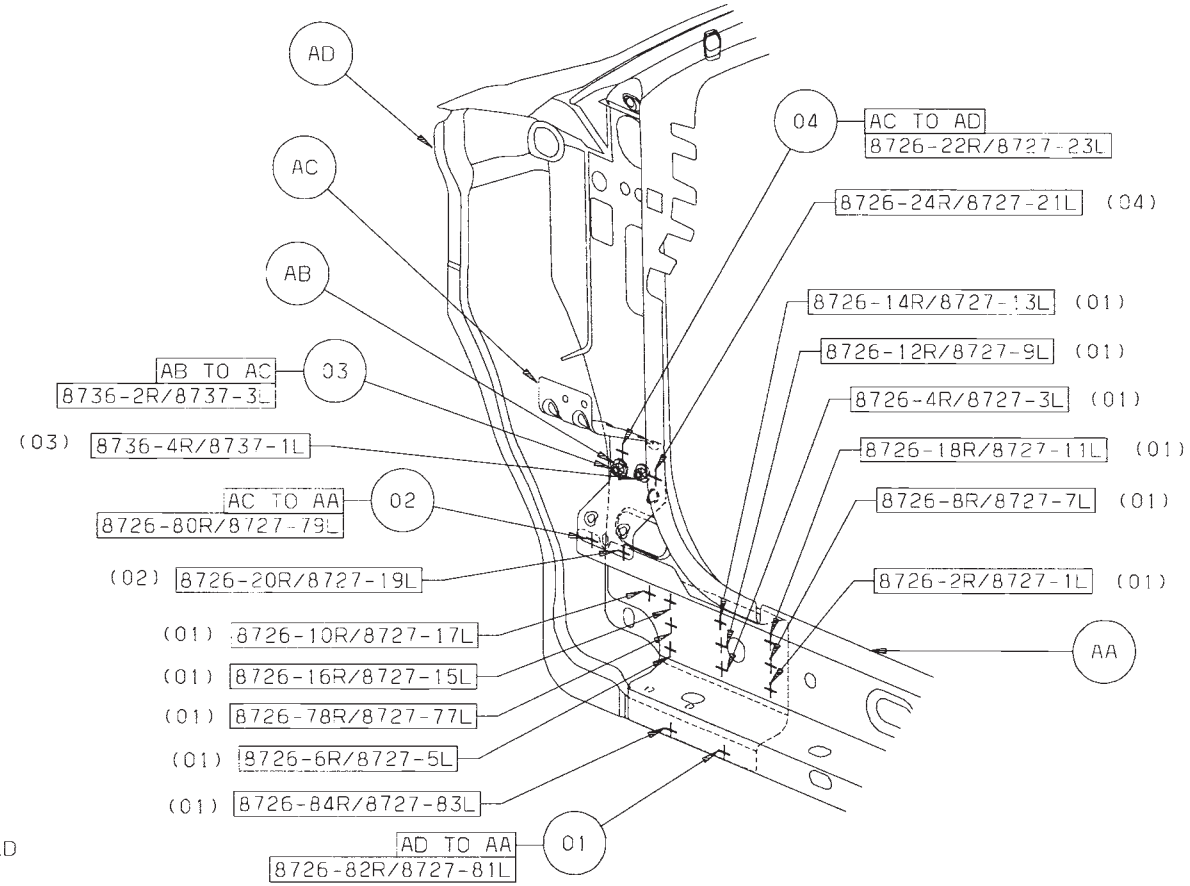

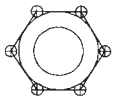

TYPICAL
PROJECTION WELD

VIEW Z

Back to Index

05 AF TO AE 13/SD S/WELDS (ORD)
06 AB TO AF 2/SD S/WELDS (ORD)
07 AE TO AA 15/SD S/WELDS (ORD)

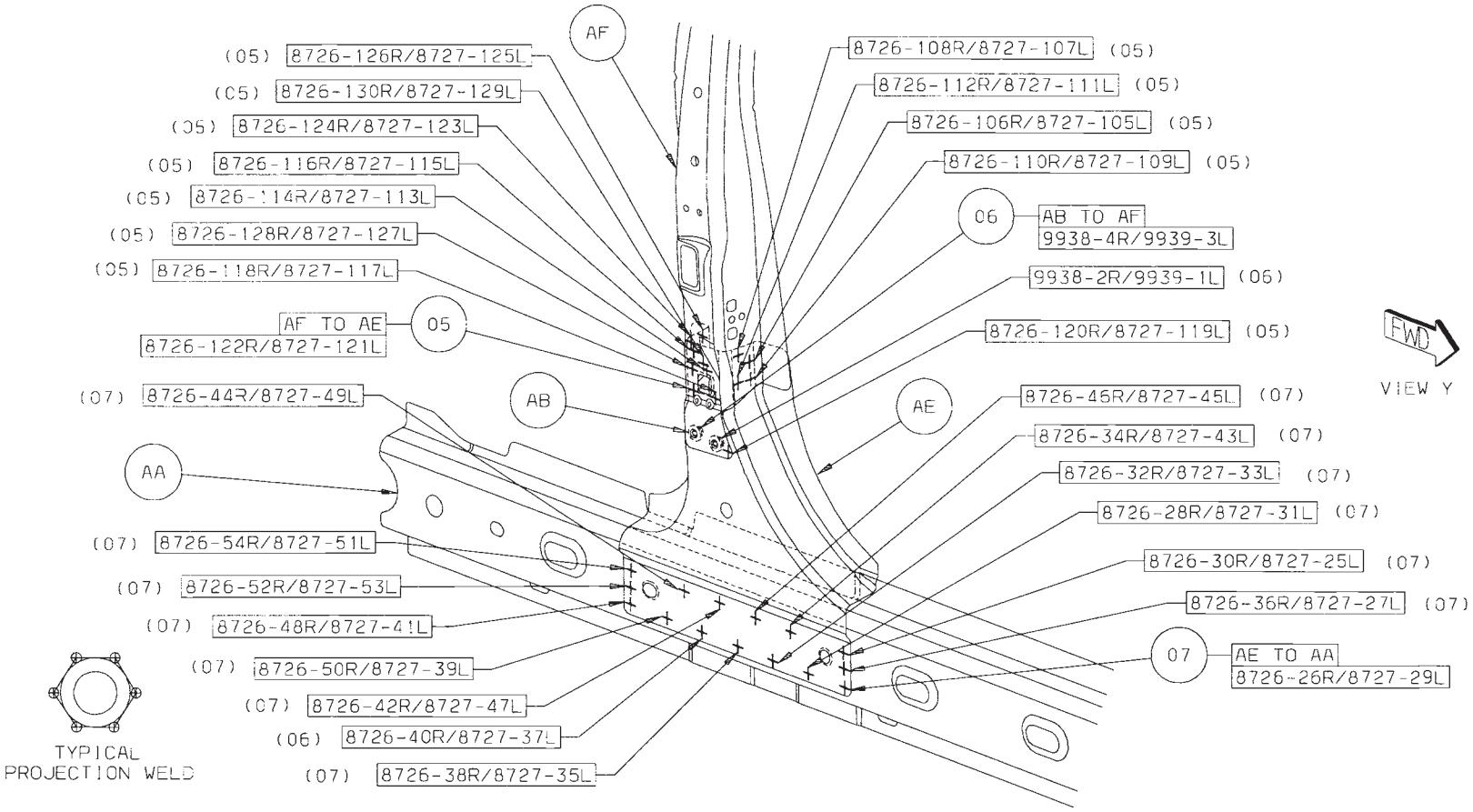

Back to Index

08 AF TO AD 6/SD S/WELDS (ORD)

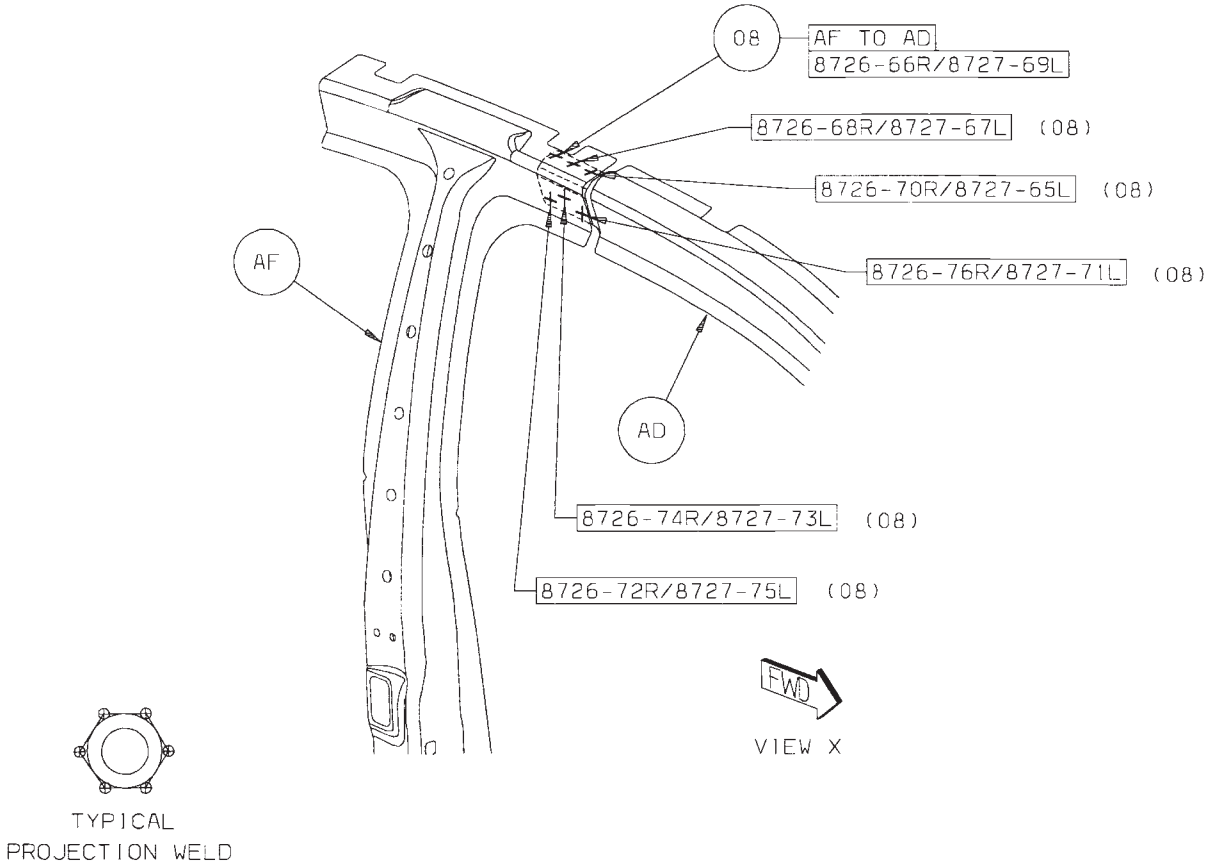

Back to Index

09 AB TO AF 4R/2L PROJ WELDS

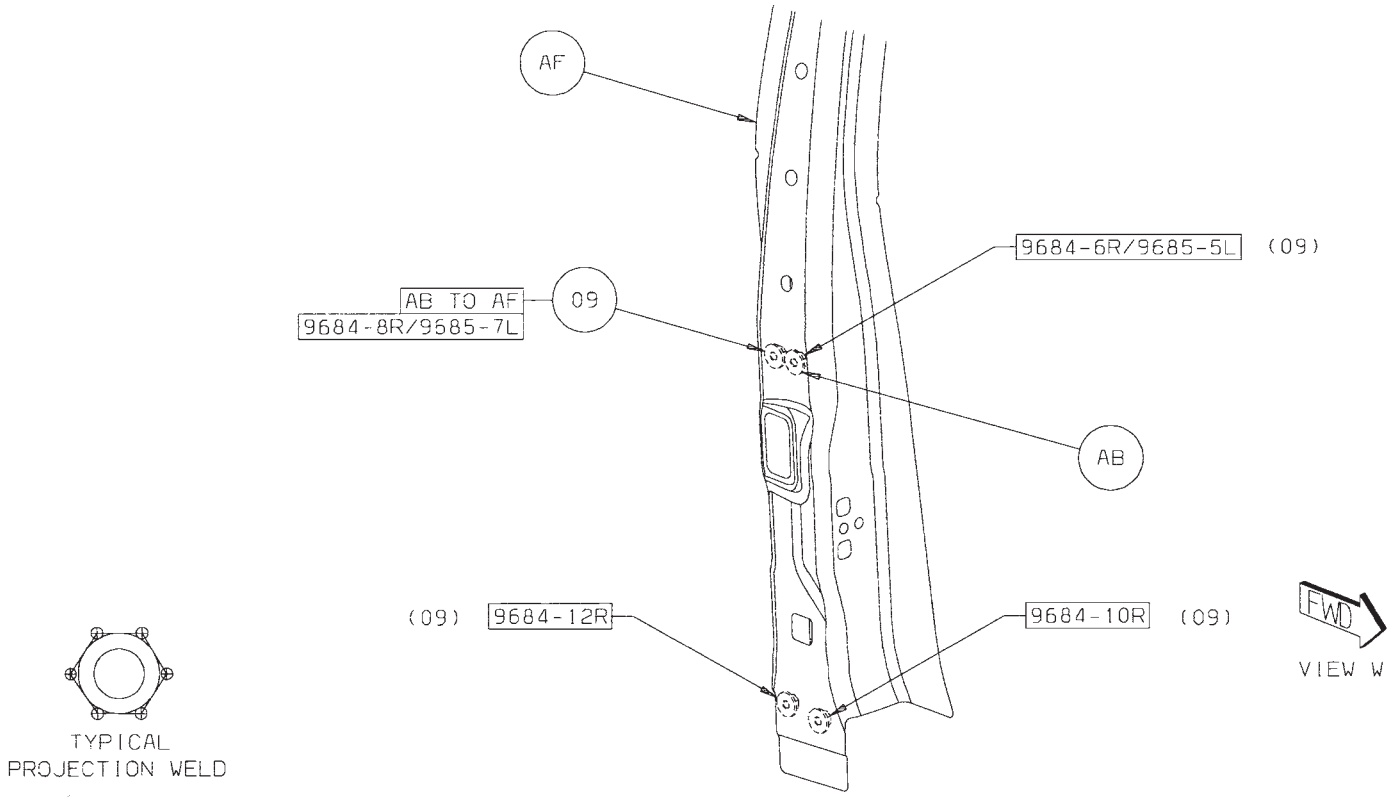

Back to Index

CHRYSLER SEBRING/DODGE AVENGER MISCELLANEOUS BODY (COMMON) SECTION

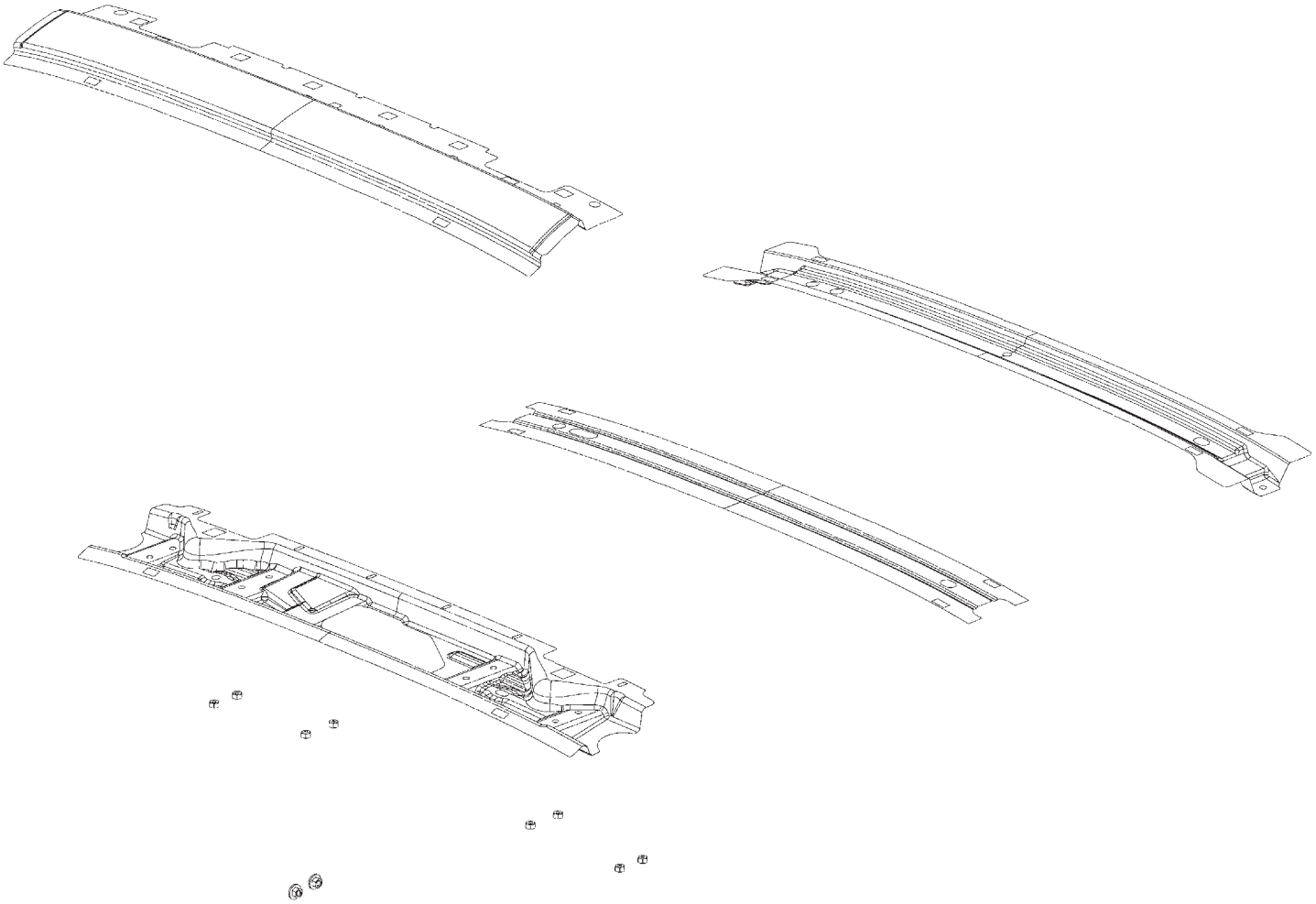

AD NUT.WELD/HEX – NIBS.NO.FIN – ROOF BOW TO ROOF RAIL
AE BOW – B-PILLAR LWR –
AF BOW – B-PILLAR UPR –

Back to Index

PARTS IDENTIFICATION LEGEND, OVERVIEW 15

AD NUT.WELD/HEX – NIBS.NO.FIN – ROOF BOW TO ROOF RAIL
AE BOW – B-PILLAR LWR –
AF BOW – B-PILLAR UPR –

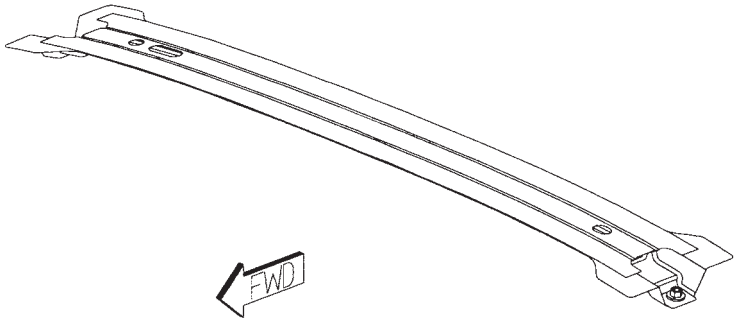

Back to Index

WELD LAYOUT LOCATION GUIDE

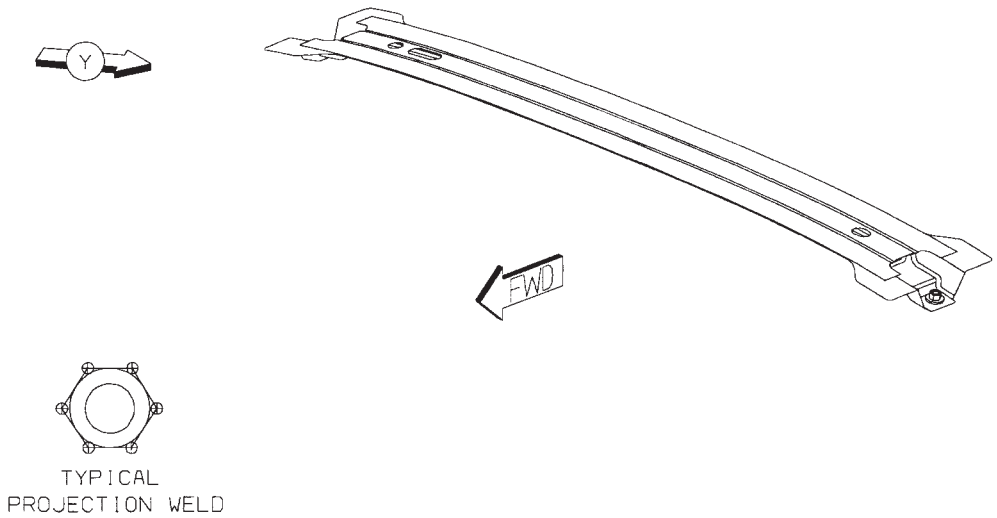

Back to Index

03 AD TO AE 2 PROJ WELDS
04 AF TO AE 36 S/WELDS (ORD)

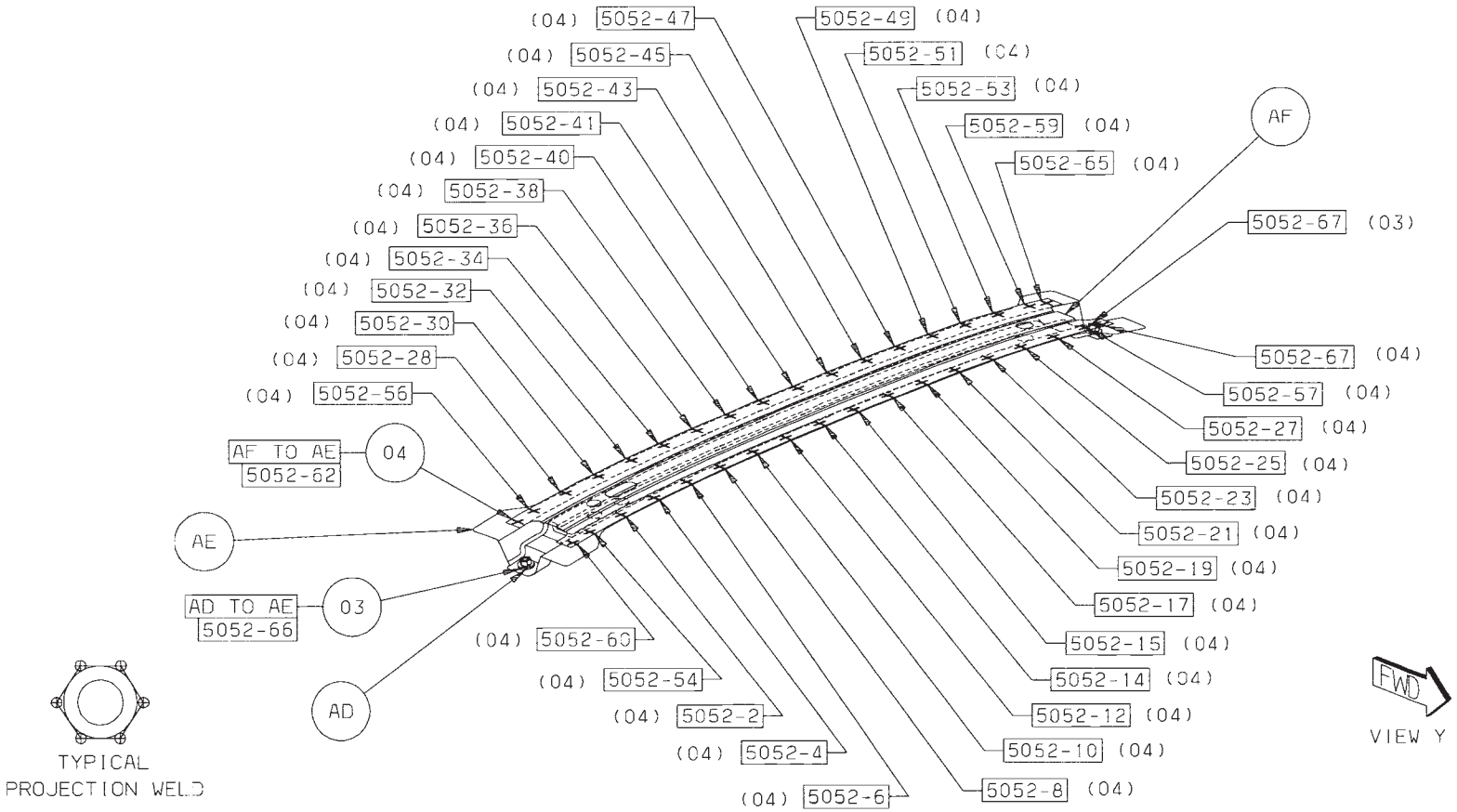

Back to Index

CHRYSLER SEBRING/DODGE AVENGER UNDERBODY (COMMON) SECTION

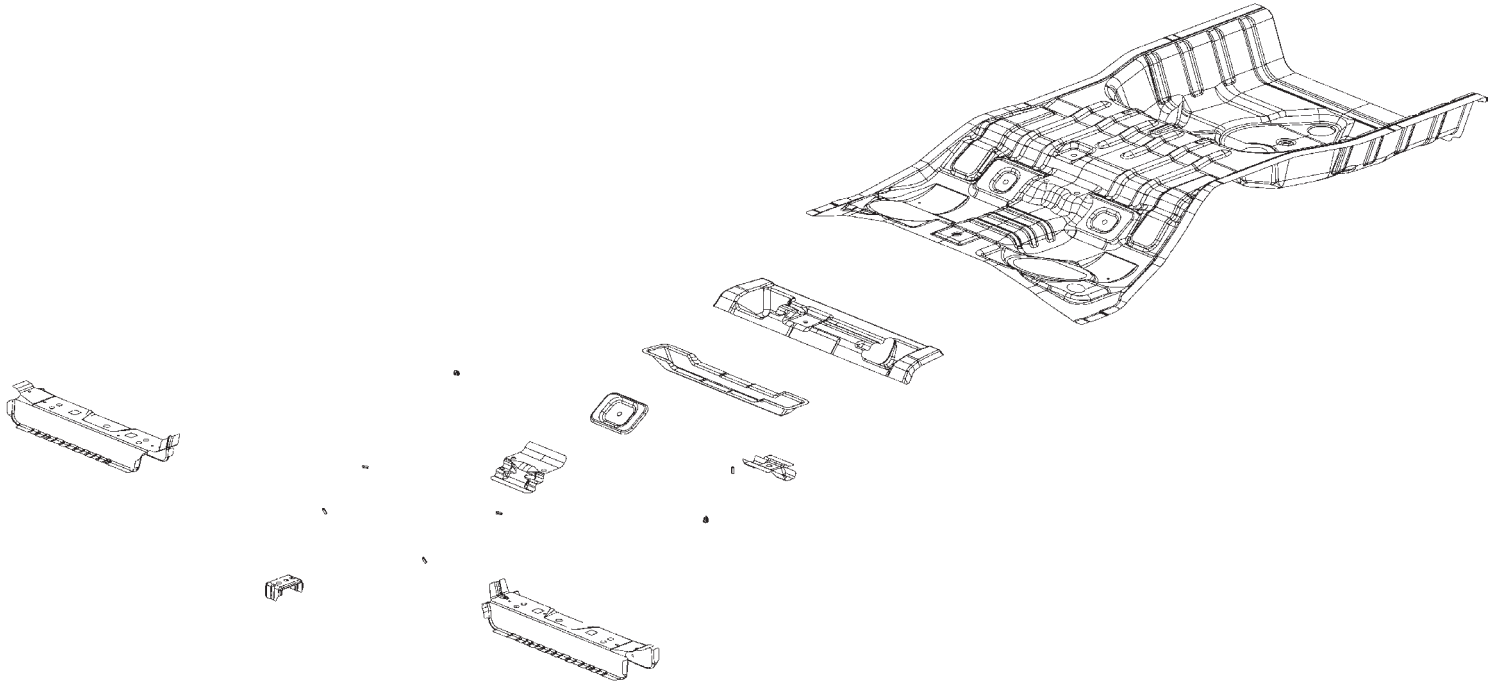

AA CROSSMEMBER – FRT FLOOR PAN FRT RT –
AB REINF – FRT FLOOR –
AB REINF – FRT FLOOR –
AC CROSSMEMBER – FRT FLOOR PAN FRT LT –
AD PAN – RR FLOOR PAN –
AE REINF – RR SEAT BELT –
AF BRACKET – RR SEAT – NONE
AG STUD.WELD/EXTERNAL – HEADER.PT.CUTTER.SPECIAL – FUEL LINE TO CROSSMEMBER
AG STUD.WELD/EXTERNAL – HEADER.PT.PNT.CUTTER.SPECIAL – HYDRAULIC PUMP TO RR FLOOR PAN
AH REINF – RR SEAT MOUNTING –
AJ BRACE – FRT SHOCK TOWER –
AK STUD.WELD/EXTERNAL – HEADER.PT.NO.FIN.SPECIAL – MUFFLER TO CROSSMEMBER
AL BRACKET – RR FLOOR PAN SPARE WHEEL ANCHOR –
AM CROSSMEMBER – RR FLOOR RR –

Back to Index

PARTS IDENTIFICATION LEGEND, OVERVIEW 16

AA CROSSMEMBER – FRT FLOOR PAN FRT RT –
AB REINF – FRT FLOOR –
AB REINF – FRT FLOOR –
AC CROSSMEMBER – FRT FLOOR PAN FRT LT –
AD PAN – RR FLOOR PAN –
AE REINF – RR SEAT BELT –
AF BRACKET – RR SEAT – NONE
AG STUD.WELD/EXTERNAL – HEADER.PT.CUTTER.SPECIAL – FUEL LINE TO CROSSMEMBER
AG STUD.WELD/EXTERNAL – HEADER.PT.PNT.CUTTER.SPECIAL – HYDRAULIC PUMP TO RR FLOOR PAN
AH REINF – RR SEAT MOUNTING –
AJ BRACE – FRT SHOCK TOWER –
AK STUD.WELD/EXTERNAL – HEADER.PT.NO.FIN.SPECIAL – MUFFLER TO CROSSMEMBER
AL BRACKET – RR FLOOR PAN SPARE WHEEL ANCHOR –
AM CROSSMEMBER – RR FLOOR RR –

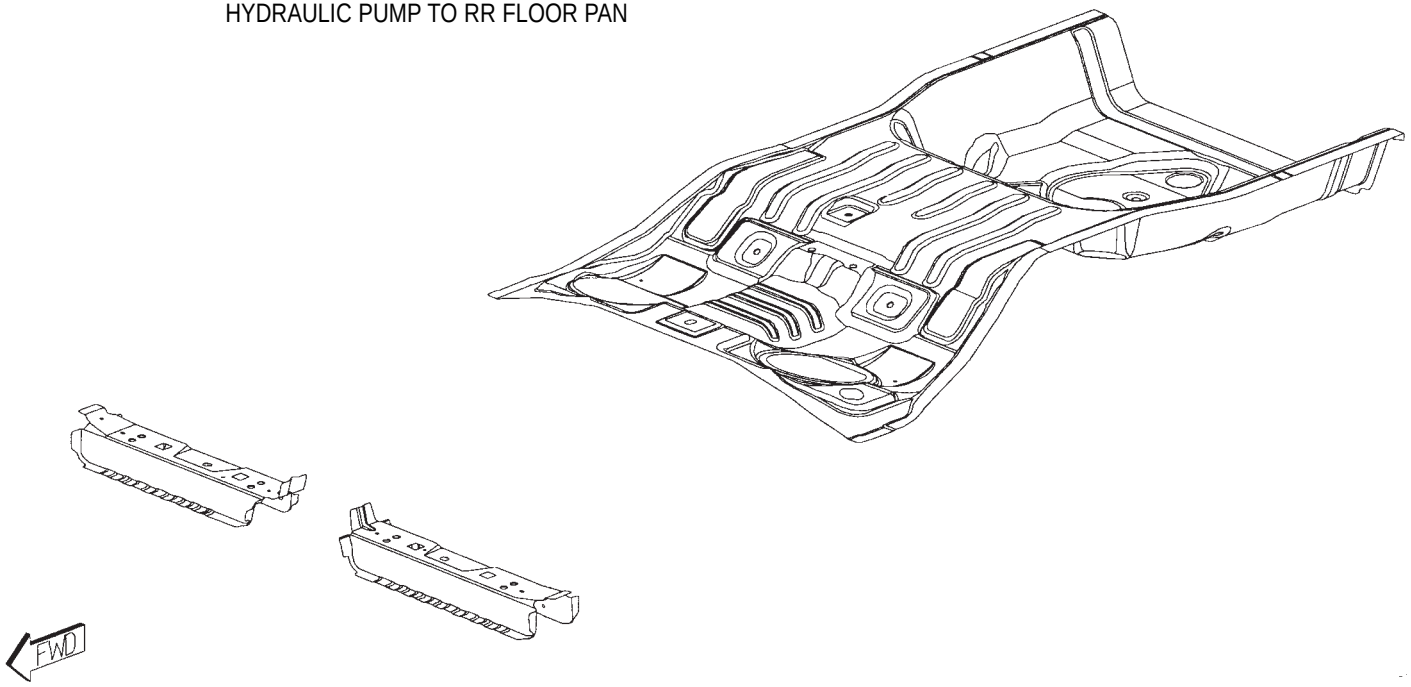

Back to Index

WELD LAYOUT LOCATION GUIDE

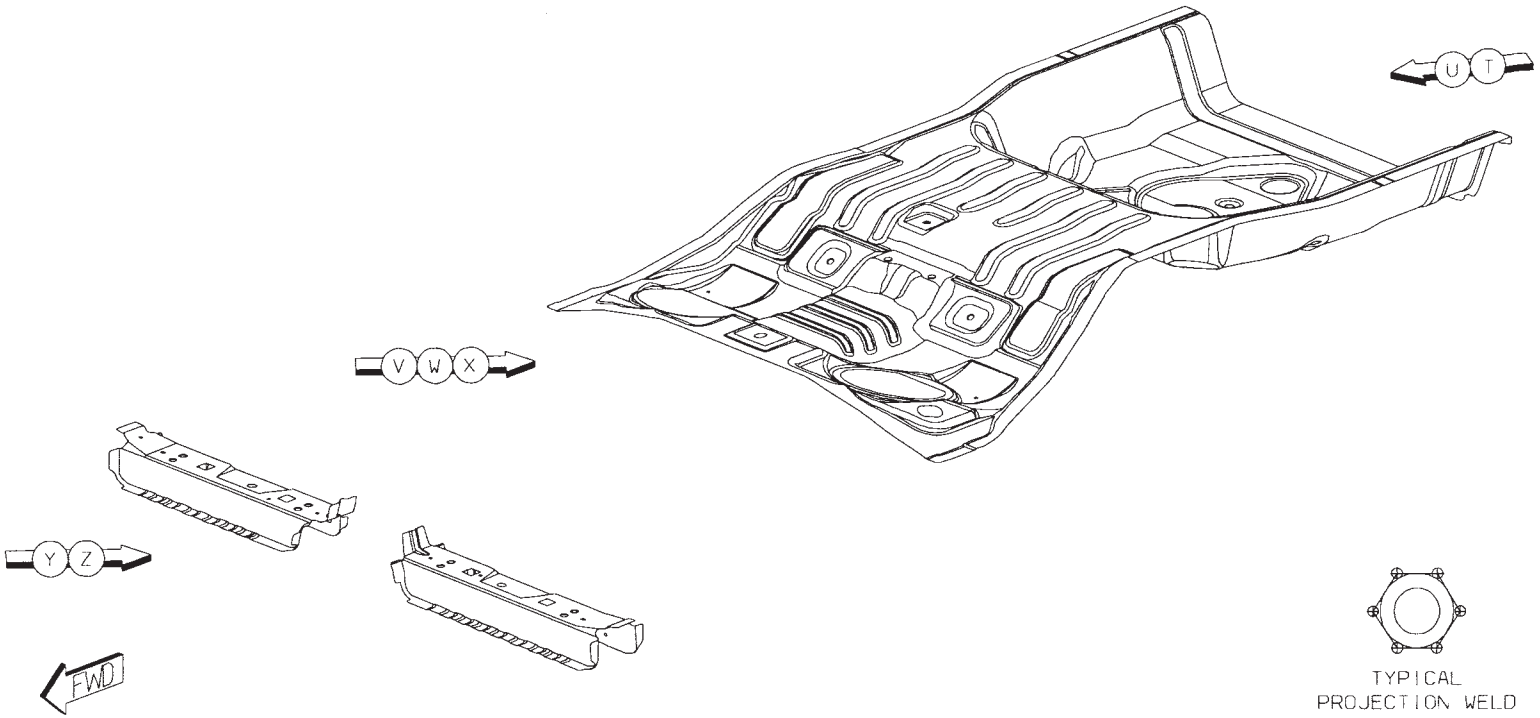

Back to Index

01 AB TO AA 12 S/WELDS (ORD)

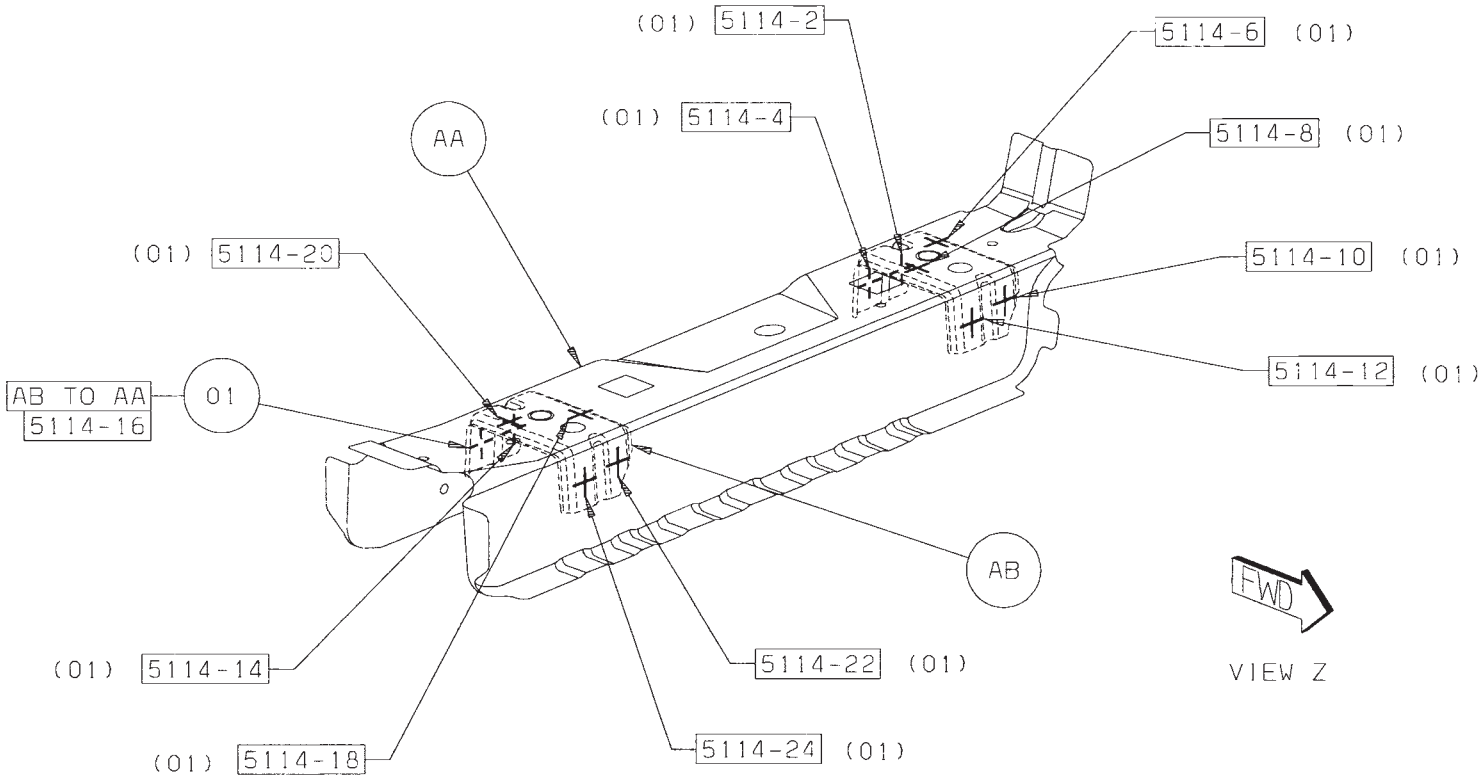

Back to Index

02 AB TO AC 12 S/WELDS (ORD)

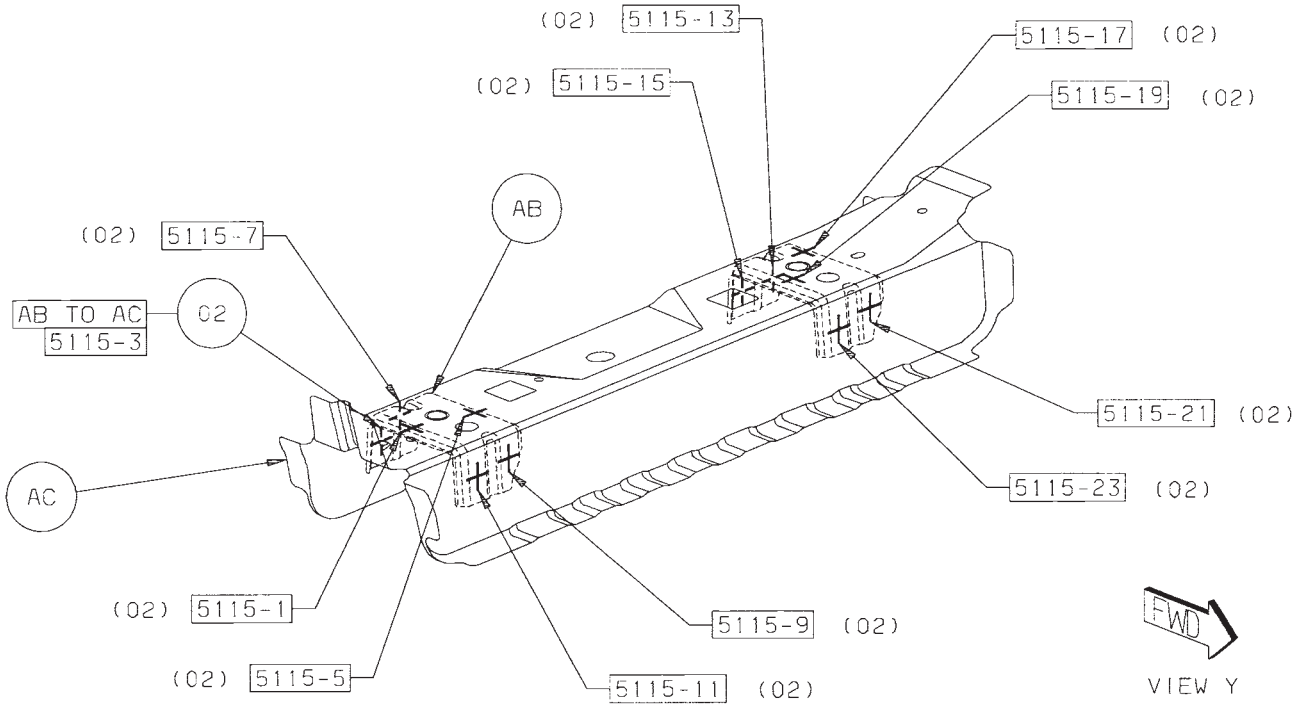

Back to Index

03 AE TO AD 12 S/WELDS (ORD)
04 AF TO AD 8 S/WELDS (ORD)

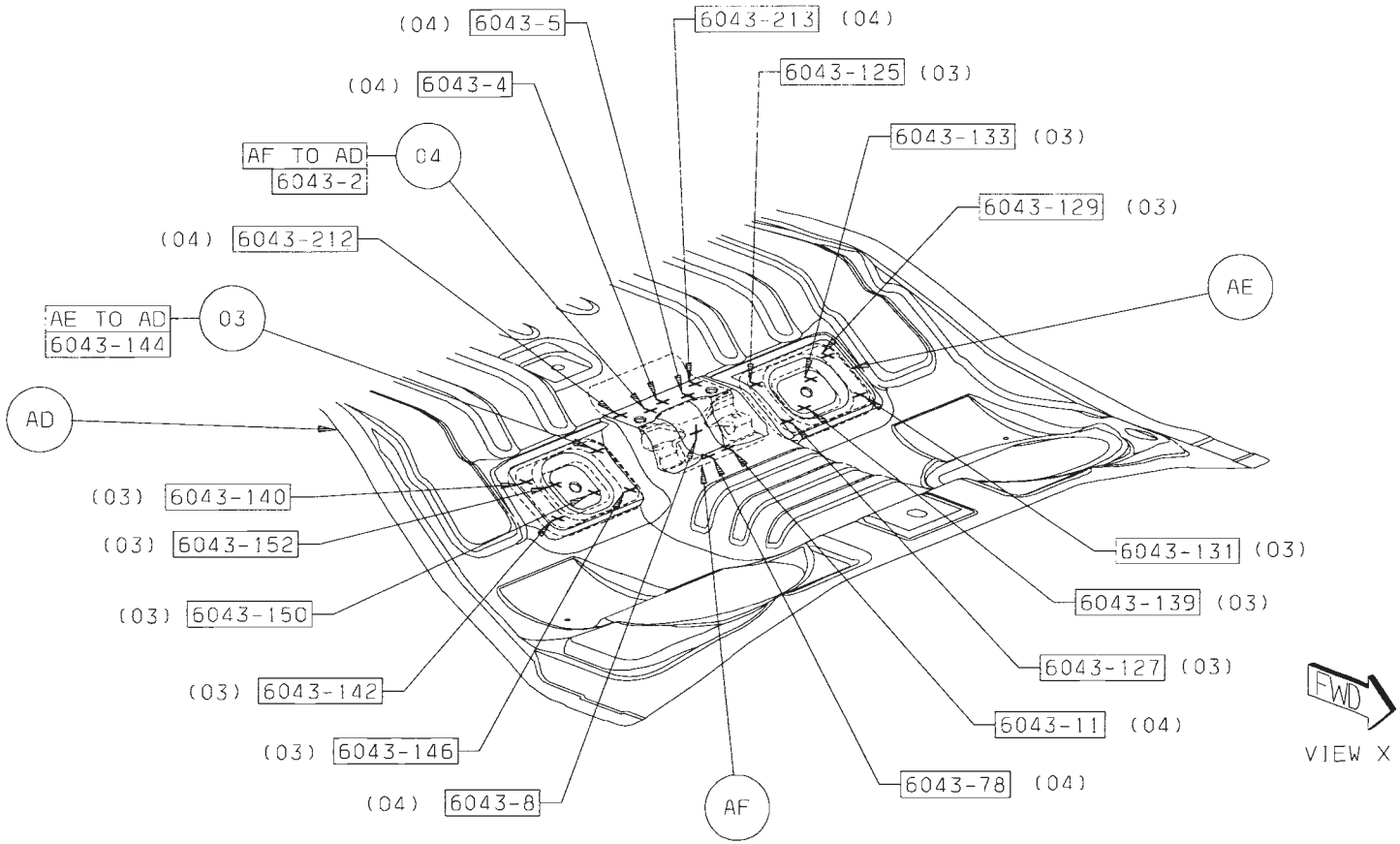

Back to Index

05 AM TO AD 12 S/WELDS (ORD)
06 AG TO AH 2 PROJ WELDS
07 AH TO AF TO AD 3 S/WELDS (ORD)

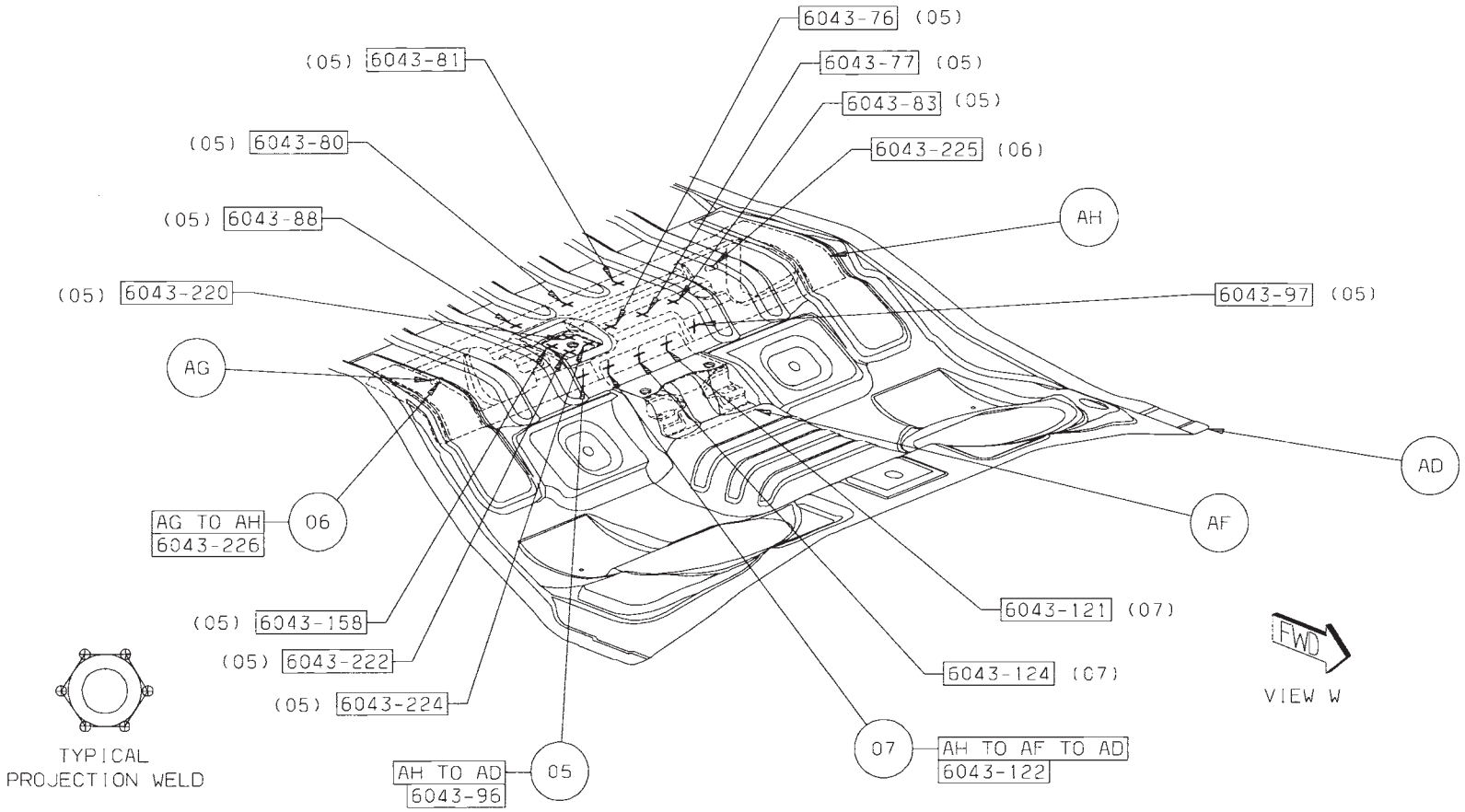

Back to Index

08 AH TO AD 22 S/WELDS (SAF)

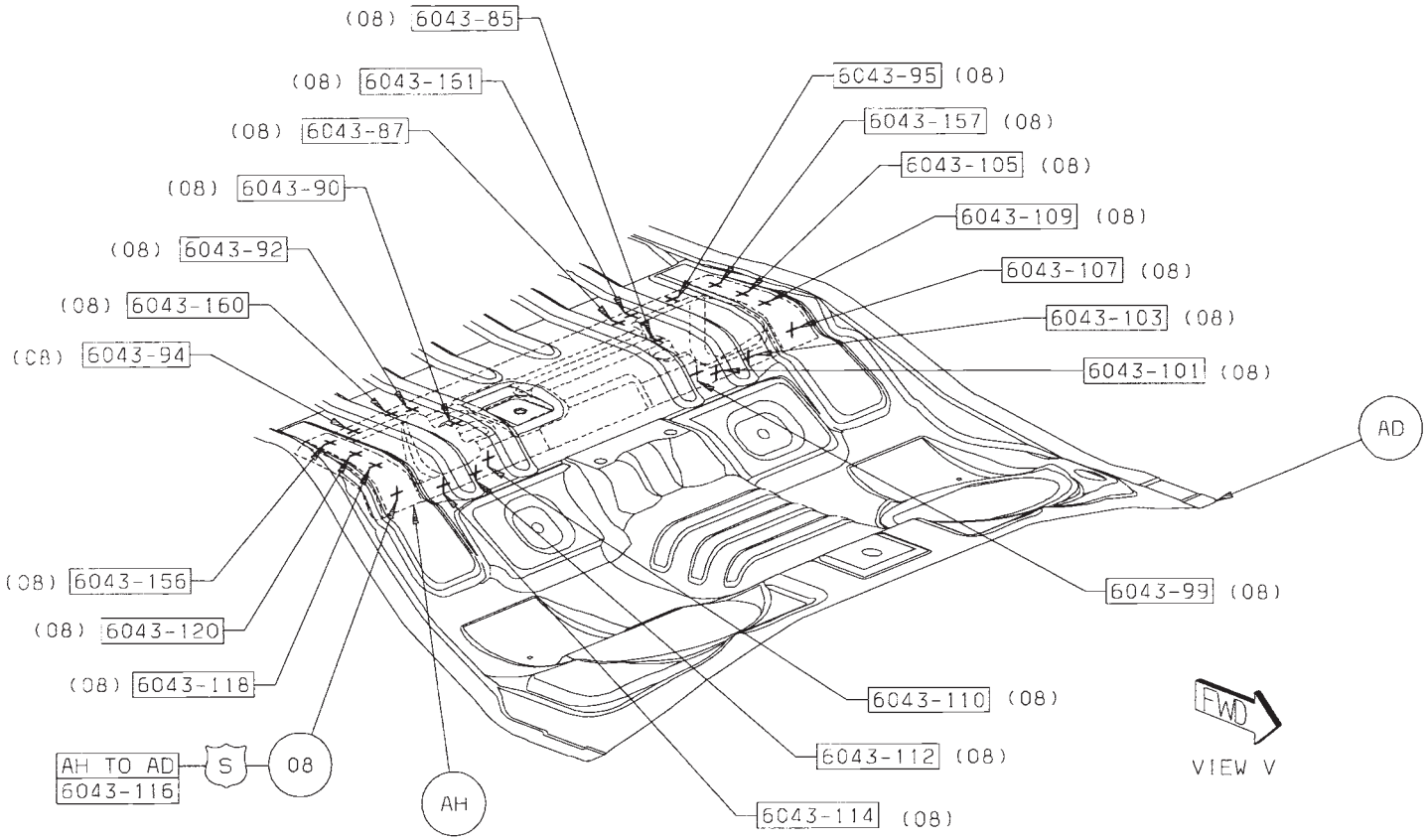

Back to Index

09 AJ TO AD 24 S/WELDS (ORD)
10 AG TO AD 1 PROJ WELD

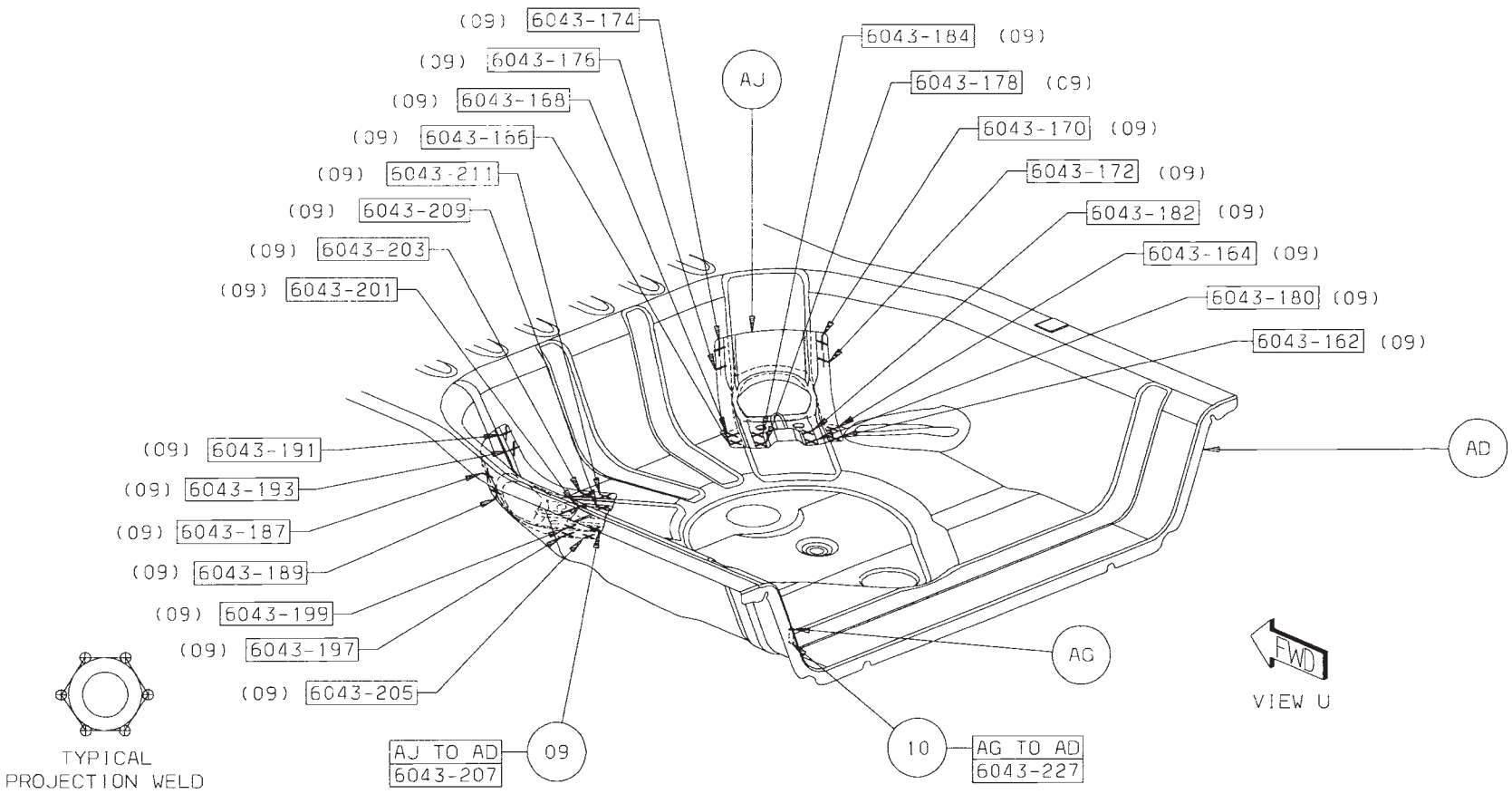

Back to Index

11 AM TO AD 26 S/WELDS (ORD)
12 AK TO AM 1 PROJ WELD
13 AL TO AM TO AD 6 S/WELDS (ORD)

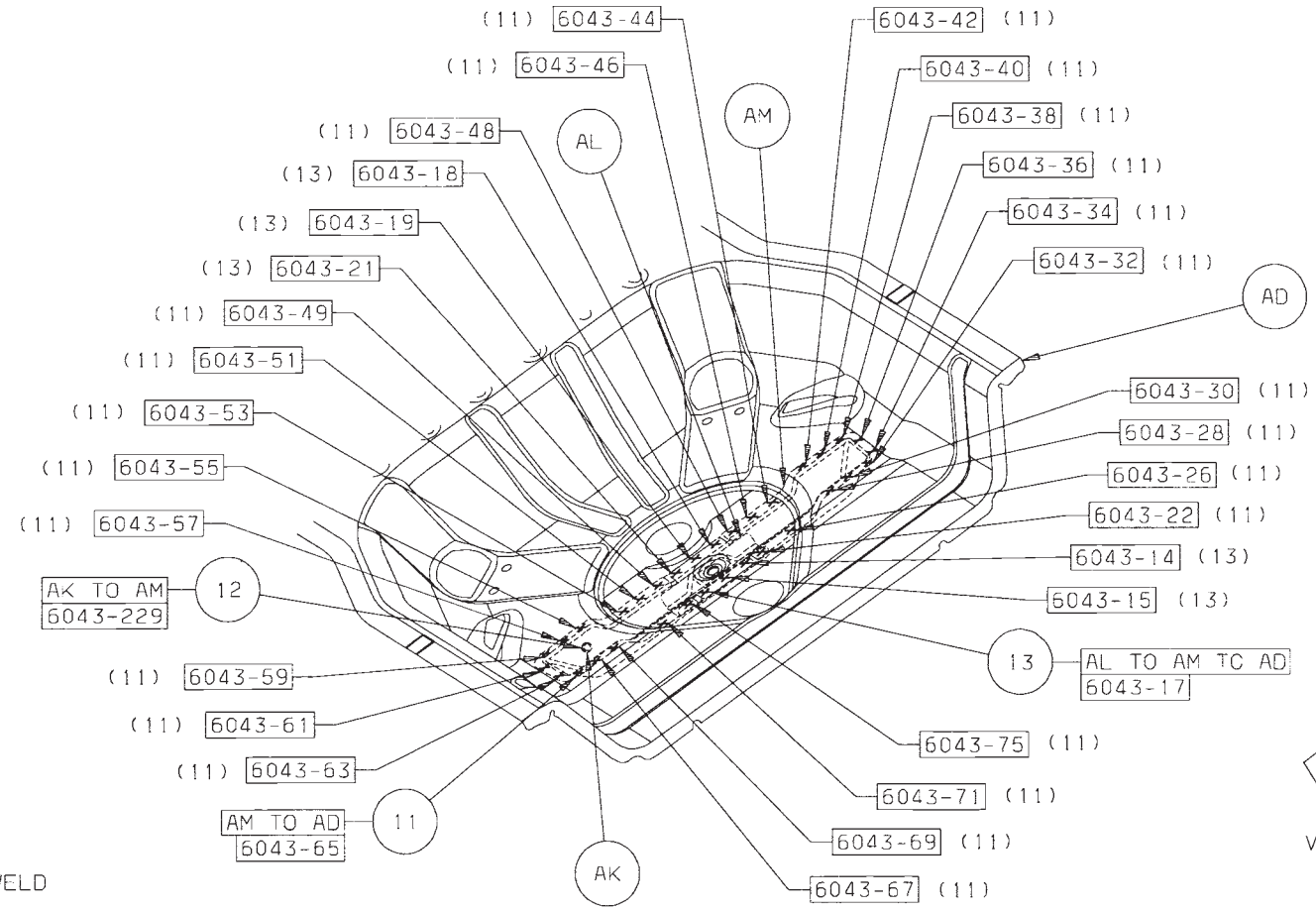

TYPICAL
PROJECTION WELD

Back to Index

CHRYSLER SEBRING
OPENING DIMENSIONS

DESCRIPTION	FIGURE
ENGINE BOX OPENING	1
WINDSHIELD OPENING	2
DOOR OPENING	3
CROSS CAR/A-PILLARS	4
DECKLID OPENING	5

Back to Index

CHRYSLER SEBRING
FRAME/BODY DIMENSIONS

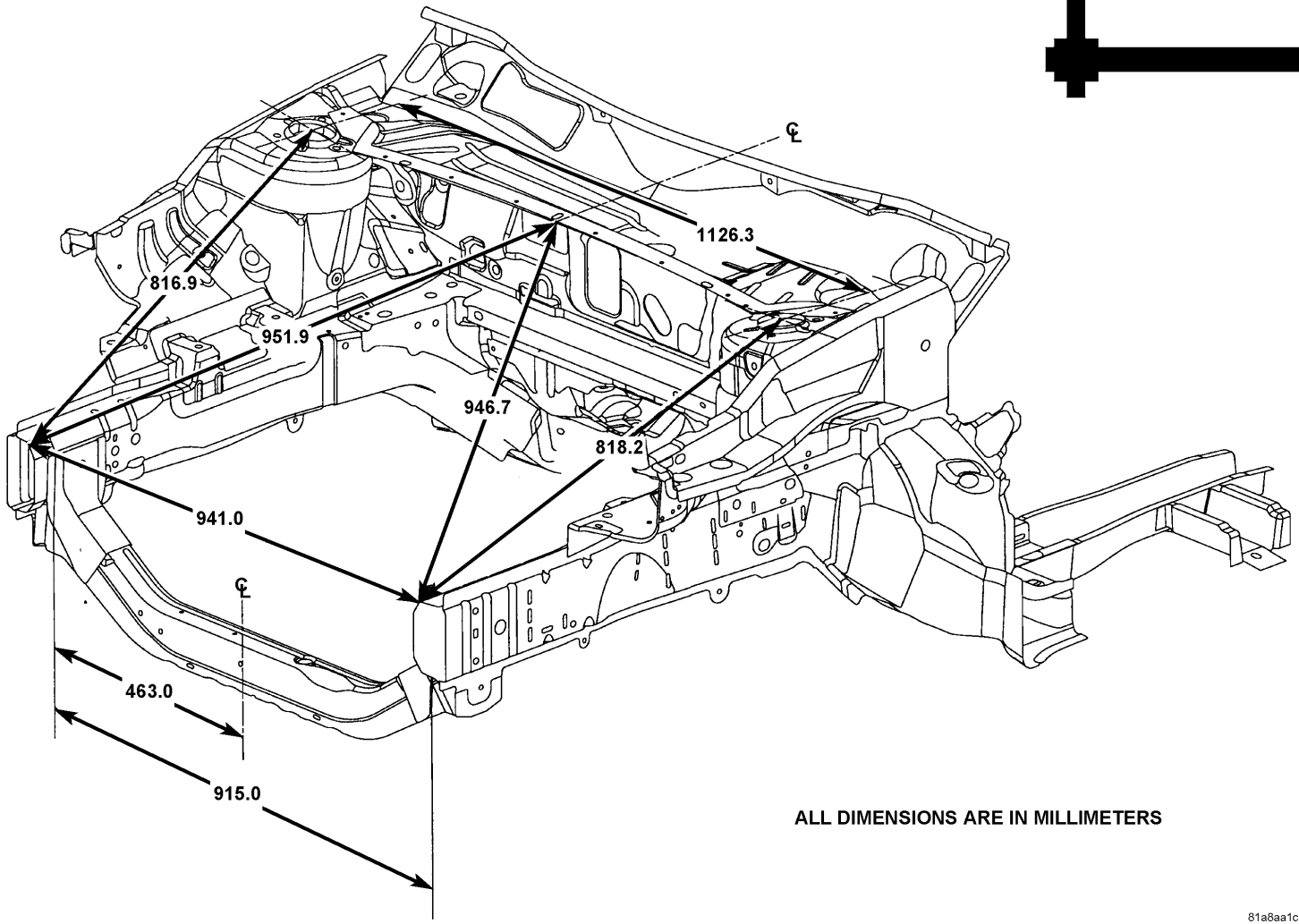

ALL DIMENSIONS ARE IN MILLIMETERS

81a8aa1c

Figure 1. ENGINE BOX OPENING

Back to Index

CHRYSLER SEBRING
FRAME/BODY DIMENSIONS

ALL DIMENSIONS ARE IN MILLIMETERS

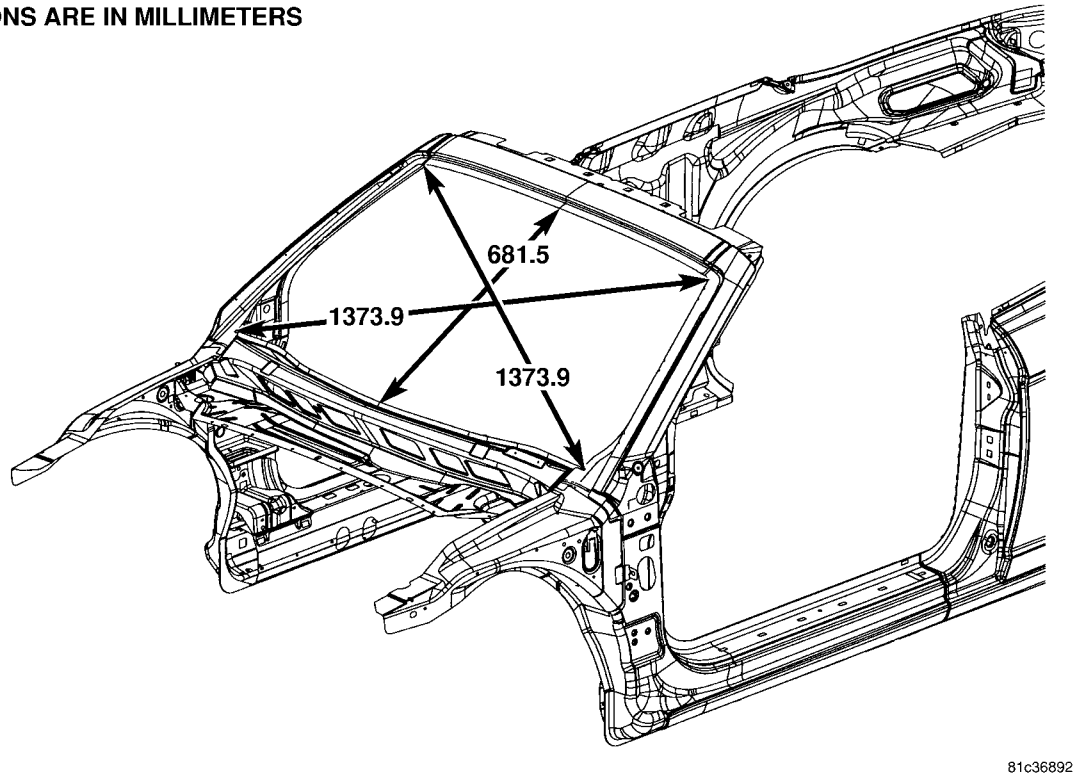

Figure 2. WINDSHIELD OPENING

Back to Index

CHRYSLER SEBRING
FRAME/BODY DIMENSIONS

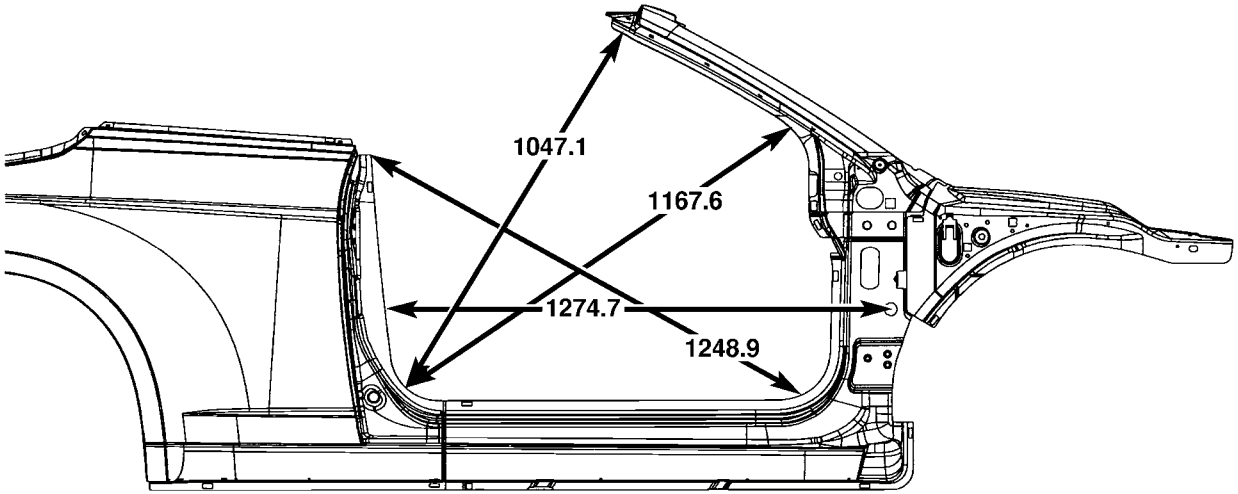

ALL DIMENSIONS ARE IN MILLIMETERS

81c36896

Figure 3. DOOR OPENING

Back to Index

CHRYSLER SEBRING
FRAME/BODY DIMENSIONS

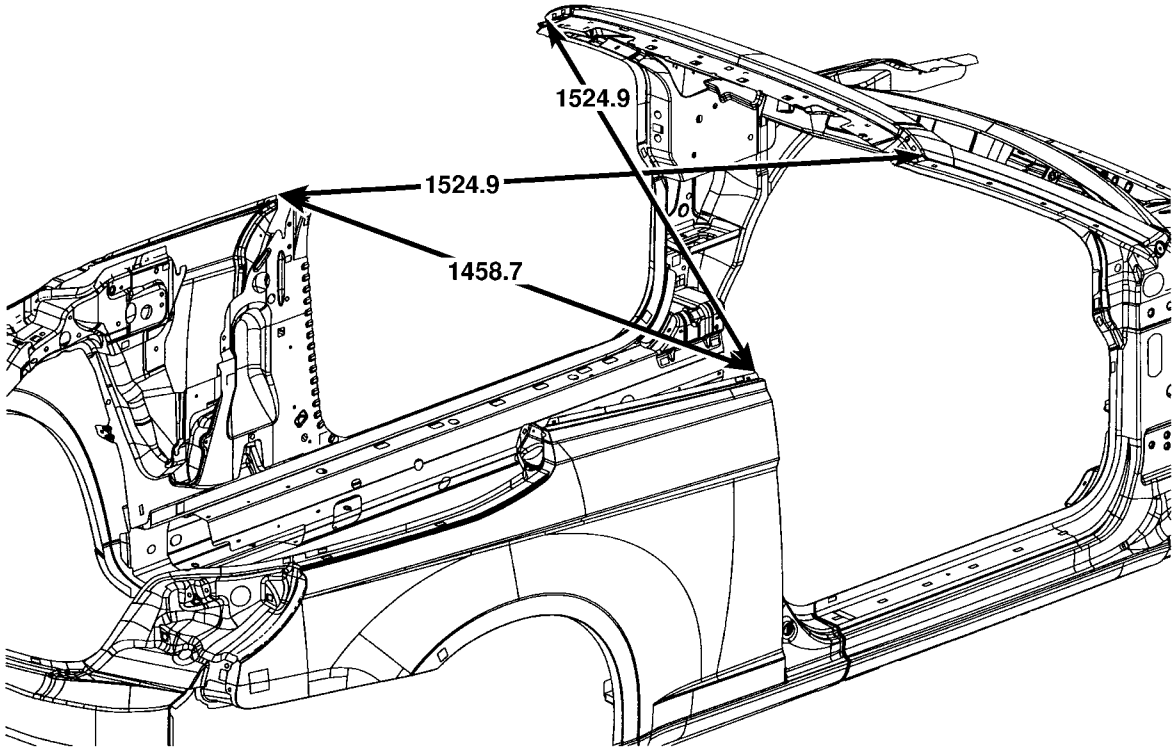

ALL DIMENSIONS ARE IN MILLIMETERS

81c3689a

Figure 4. CROSS CAR/A-PILLAR

Back to Index

CHRYSLER SEBRING
FRAME/BODY DIMENSIONS

ALL DIMENSIONS ARE IN MILLIMETERS

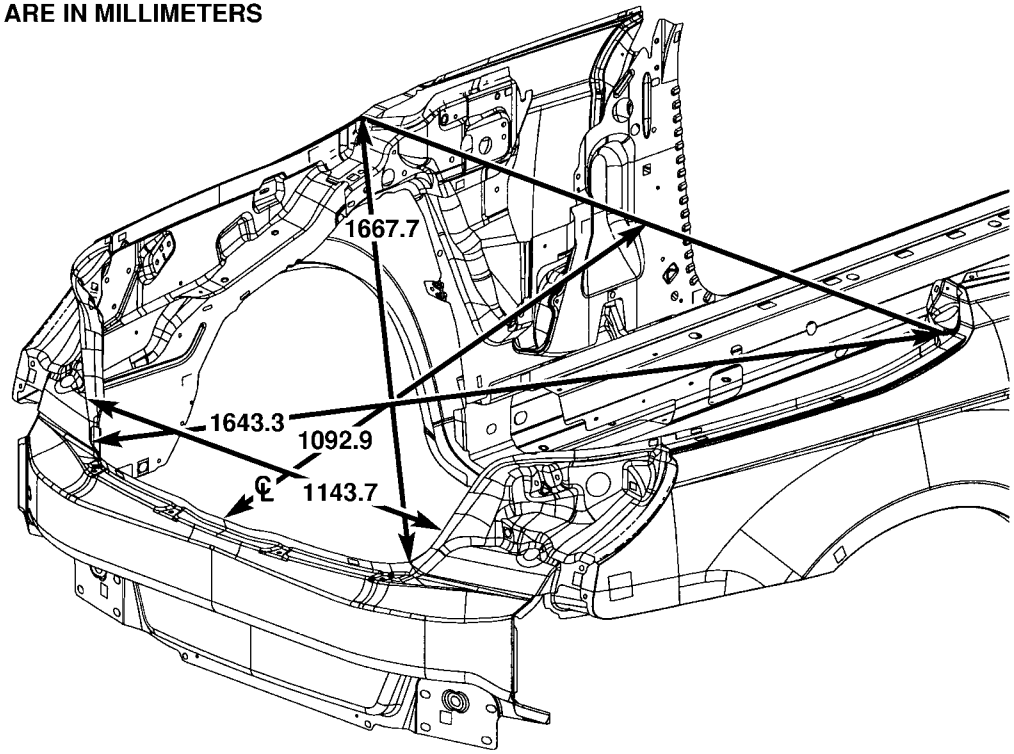

Figure 5. DECKLID OPENING

Back to Index

DODGE AVENGER PAINT CODES

EXTERIOR

CODE	COLOR
WS2	Bright Silver Metallic Clear Coat
AXR	Brilliant Black Pearl Coat
DA4	Silver Steel Metallic Pearl Coat
ARH	Inferno Red Crystal Pearl Coat
FKG	Light Sandstone Metallic Clear Coat
EBL	Modern Blue Pearl Coat
EBD	Marathon Blue Pearl Coat
DV6	Sunburst Orange Pearl Coat
SW1	Stone White Clear Coat

INTERIOR

CODE	COLOR
D1 (R/T Only)	D = Dark Slate Grey/Light Grey
J1	J = Dark Khaki/Light Greystone
DB	S = Slate Grey/Light Slate Grey

Back to Index

CHRYSLER SEBRING PAINT CODES

EXTERIOR

CODE	COLOR
WS2	Bright Silver Metallic Clear Coat
AXR	Brilliant Black Pearl Coat
DA4	Silver Steel Metallic Pearl Coat
ARH	Inferno Red Crystal Pearl Coat
FKG	Light Sandstone Metallic Clear Coat
EBL	Modern Blue Pearl Coat
EBD	Marathon Blue Pearl Coat
SW1	Stone White Clear Coat

INTERIOR

CODE	COLOR
T1 (LTD Only)	C = Cream/Medium Pebble Beige
J1	J = Dark Khaki/Light Greystone
DB	S = Slate Grey/Light Slate Grey

Back to Index

CODE LOCATION

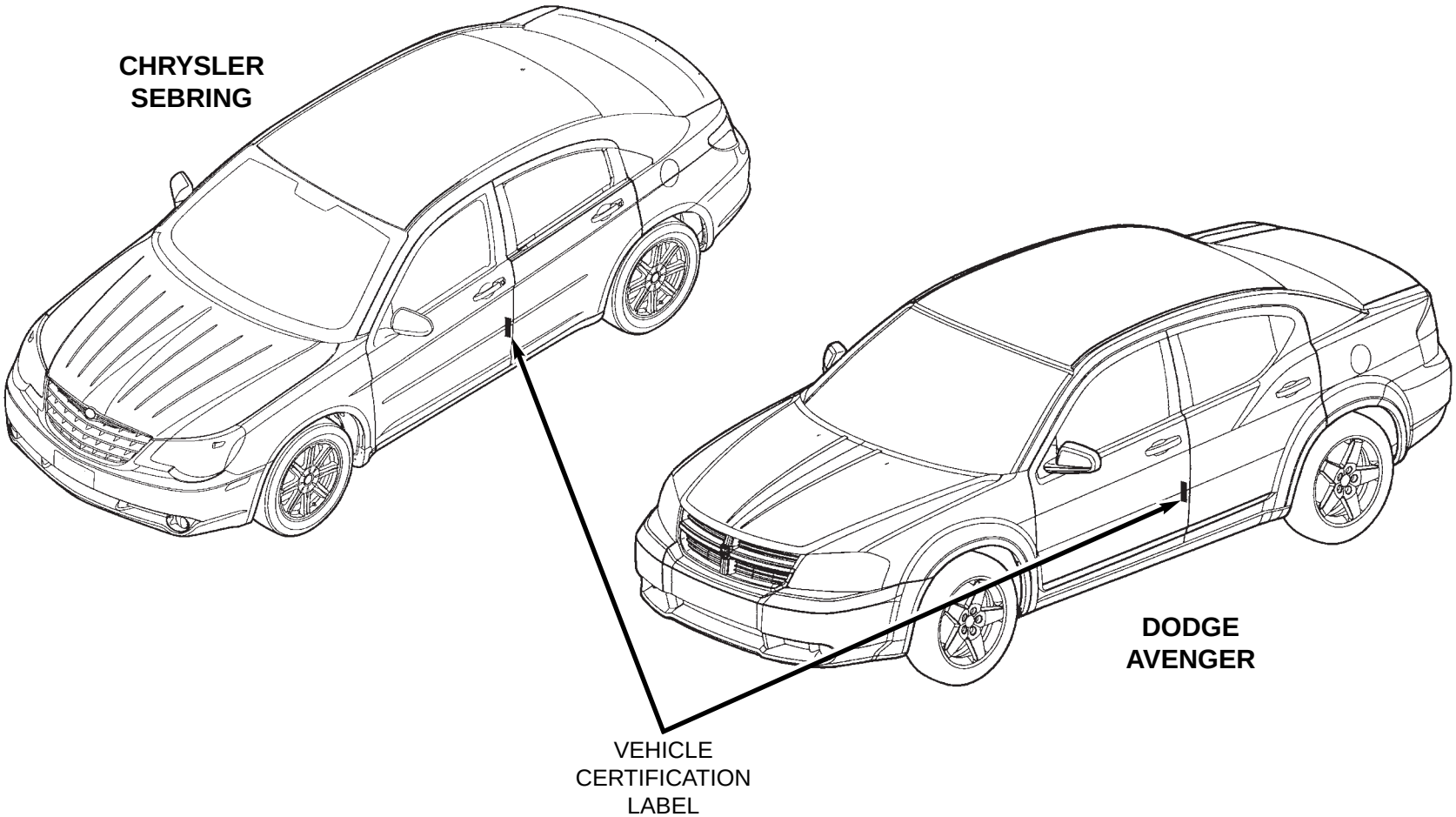

The vehicle certification label identifies the paint code. This label is located on the driver's door shut face.

Back to Index

CHRYSLER SEBRING PAINT CODES

EXTERIOR

CODE	COLOR
WS2	Bright Silver Metallic Clear Coat
AXR	Brilliant Black Pearl Coat
DA4	Silver Steel Metallic Pearl Coat
ARH	Inferno Red Crystal Pearl Coat
FKG	Light Sandstone Metallic Clear Coat
EBL	Modern Blue Pearl Coat
EBD	Marathon Blue Pearl Coat
SW1	Stone White Clear Coat

INTERIOR

CODE	COLOR
T1 (LTD Only)	C = Cream/Medium Pebble Beige
J1	J = Dark Khaki/Light Greystone
DB	S = Slate Grey/Light Slate Grey

Back to Index

CODE LOCATION

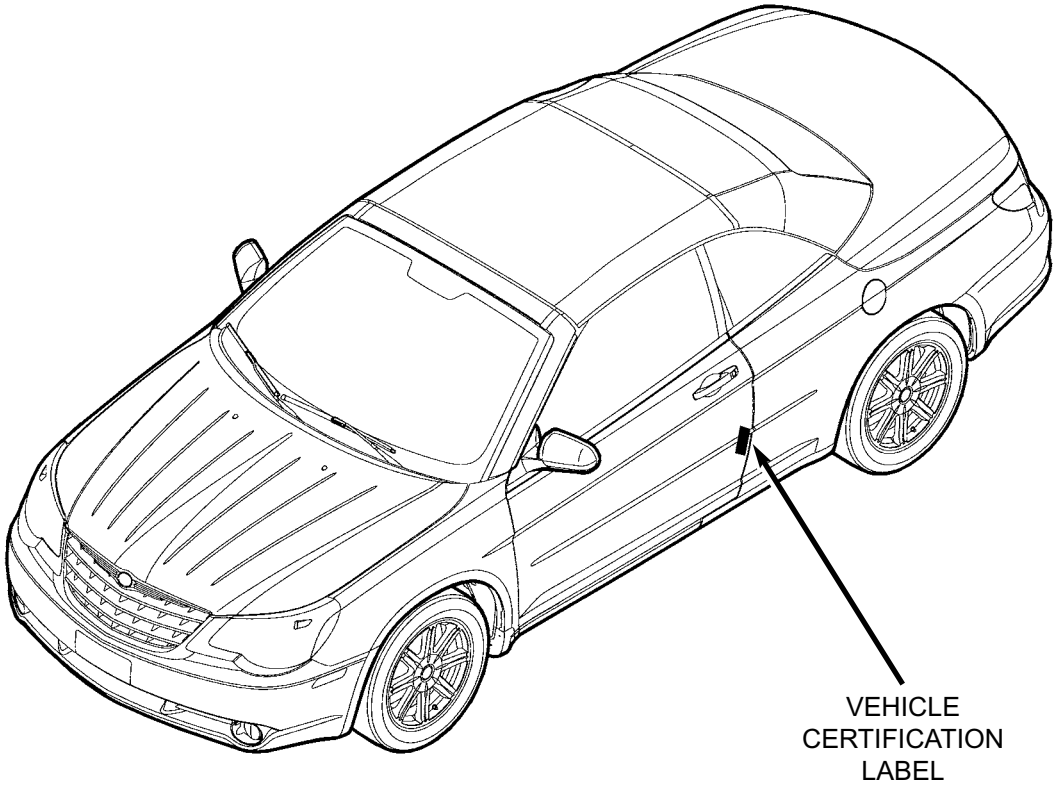

The vehicle certification label identifies the paint code. This label is located on the driver's door shut face.

Back to Index

CHRYSLER SEBRING PLENUM/COWL SECTION

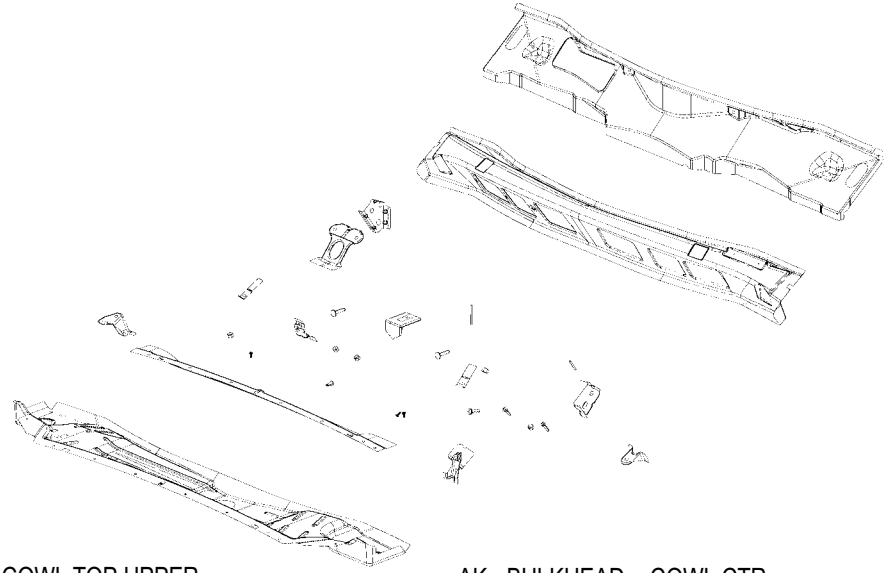

AA PANEL – COWL TOP UPPER –
AB PANEL – COWL TOP INNER –
AC PANEL – COWL TOP LOWER –
AD BRACE – FRT SHOCK TOWER –
AE BRACKET – WINDSHIELD –
AF STUD.WELD/EXTERNAL – SPECIAL – WIPER MTR WIRE HARNESS TO PLENUM
AF STUD.WELD/EXTERNAL – SPECIAL – DASH SILENCER TO PLENUM
AG NUT/WELD.HEX – THICK – COWL PLENUM CTR TO WIPER ARM
AG NUT/WELD.HEX – THICK – COWL PLENUM CTR TO WIPER ARM
AG NUT/WELD.HEX – THICK – COWL PLENUM CTR TO WIPER ARM
AH BRACKET – COWL PLENUM LWR WIPER MOTOR ATTACHMENT –
AJ BRACKET – WINDSHIELD WIPER ATTACHMENT CENTER –
AK BULKHEAD – COWL CTR –
AL BRACKET – COWL PLENUM LWR WIPER MOTOR ATTACHMENT –
AM BULKHEAD – COWL PLENUM LT –
AN BRACKET – WIPER MODULE MTG –
AP STUD.WELD/INTERNAL – HEADER.PT.NIBS.NO.FIN – BRAKE PEDAL TO PLENUM
AR BRACKET – BRAKE PEDAL –
AS STUD.WELD/EXTERNAL – PNT.CUTTER.PILOT.PT.SPECIAL – BODY WIRING HARNESS TO PLENUM
AT NUT/WELD.HEX – NIBS.NO.FIN.PILOT.PT – BULKHEAD TO LWR PLENUM
AU STUD.WELD.UNTHREADED – NIBS.NO.FIN.FIA.UNTHREADED – I/P TO PLENUM
AV BRACKET – COWL PLENUM CTR –
AW STUD.WELD.EXTERNAL – PNT.CUTTER.PILOT.PT.SPECIAL – DASH HEAT SHIELD TO PLENUM

Back to Index

PARTS IDENTIFICATION LEGEND, OVERVIEW 4

AA PANEL – COWL TOP UPPER –
AB PANEL – COWL TOP INNER –
AC PANEL – COWL TOP LOWER –
AD BRACE – FRT SHOCK TOWER –
AE BRACKET – WINDSHIELD –
AF STUD.WELD/EXTERNAL – SPECIAL – WIPER MTR WIRE HARNESS TO PLENUM
AF STUD.WELD/EXTERNAL – SPECIAL – DASH SILENCER TO PLENUM
AG NUT/WELD.HEX – THICK – COWL PLENUM CTR TO WIPER ARM
AG NUT/WELD.HEX – THICK – COWL PLENUM CTR TO WIPER ARM
AG NUT/WELD.HEX – THICK – COWL PLENUM CTR TO WIPER ARM
AH BRACKET – COWL PLENUM LWR WIPER MOTOR ATTACHMENT –
AJ BRACKET – WINDSHIELD WIPER ATTACHMENT CENTER –
AK BULKHEAD – COWL CTR –
AL BRACKET – COWL PLENUM LWR WIPER MOTOR ATTACHMENT –
AM BULKHEAD – COWL PLENUM LT –
AN BRACKET – WIPER MODULE MTG –
AP STUD.WELD/INTERNAL – HEADER.PT.NIBS.NO.FIN – BRAKE PEDAL TO PLENUM
AR BRACKET – BRAKE PEDAL –
AS STUD.WELD/EXTERNAL – PNT.CUTTER.PILOT.PT.SPECIAL – BODY WIRING HARNESS TO PLENUM
AT NUT/WELD.HEX – NIBS.NO.FIN.PILOT.PT – BULKHEAD TO LWR PLENUM
AU STUD.WELD.UNTHREADED – NIBS.NO.FIN.FIA.UNTHREADED – I/P TO PLENUM
AV BRACKET – COWL PLENUM CTR –
AW STUD.WELD.EXTERNAL – PNT.CUTTER.PILOT.PT.SPECIAL – DASH HEAT SHIELD TO PLENUM

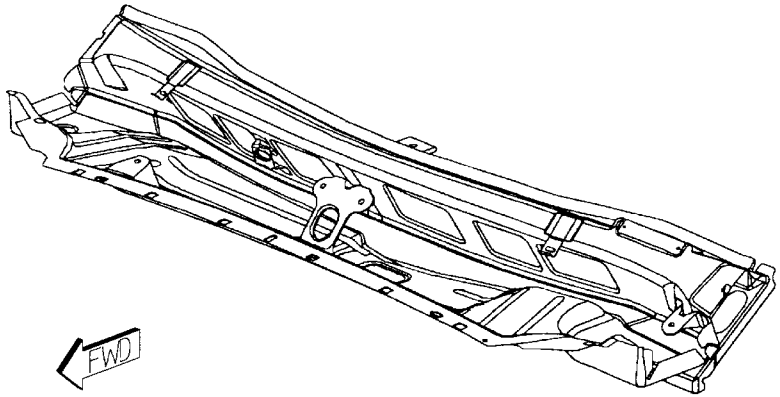

Back to Index

WELD LAYOUT LOCATION GUIDE

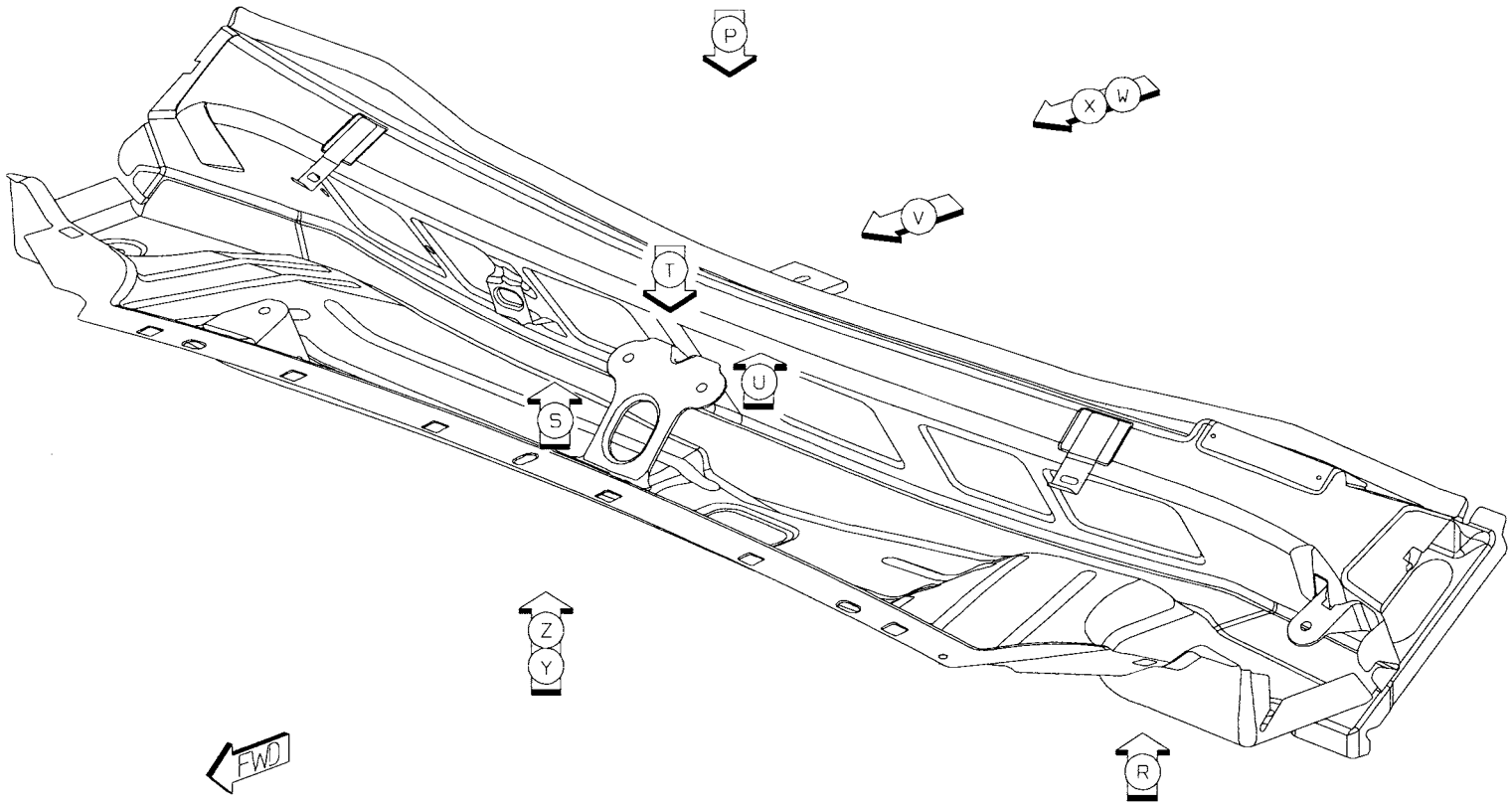

Back to Index

01 AB TO AA 35 S/WELDS (ORD)

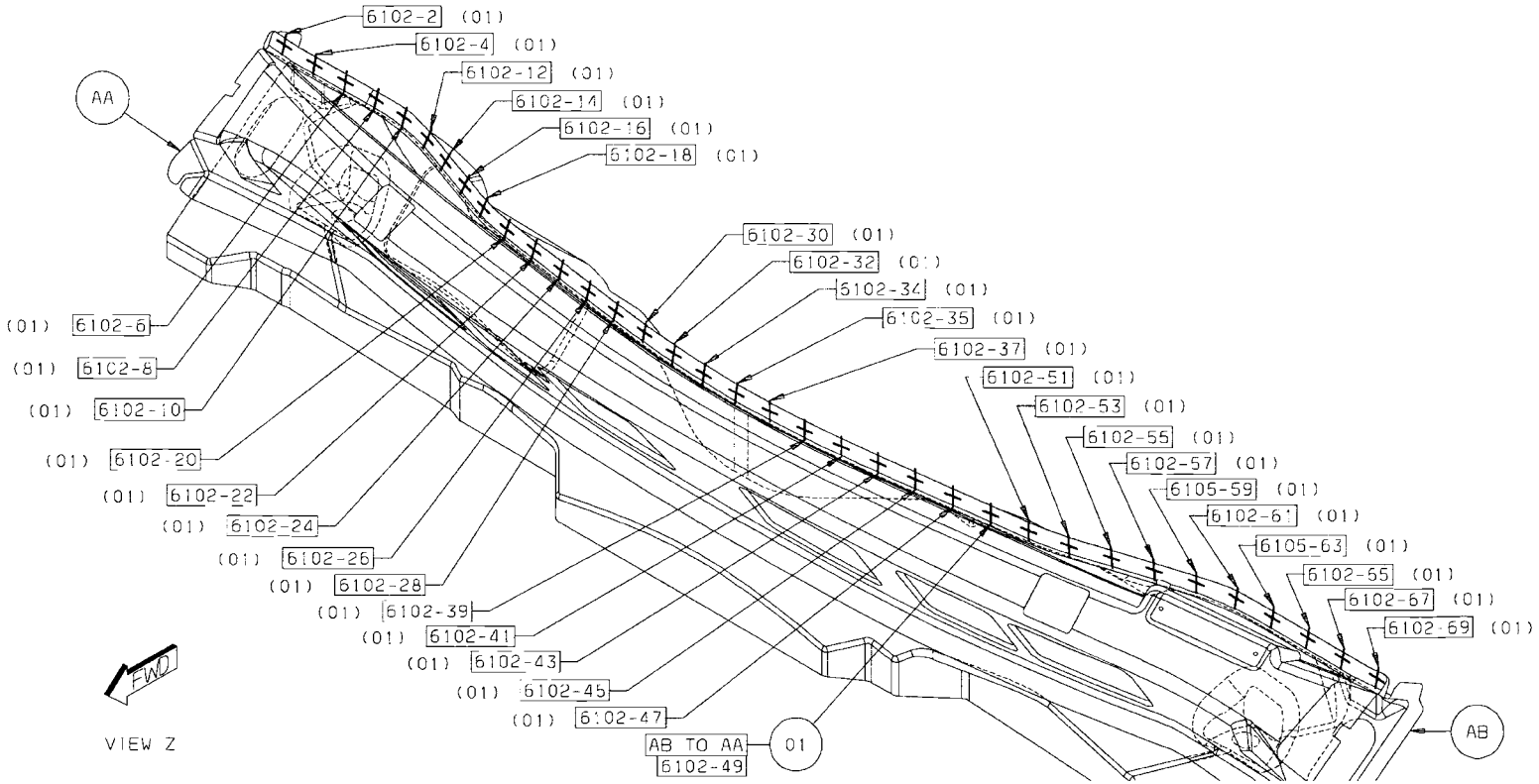

Back to Index

02 AC TO AB TO AA 34 S/WELDS (ORD)

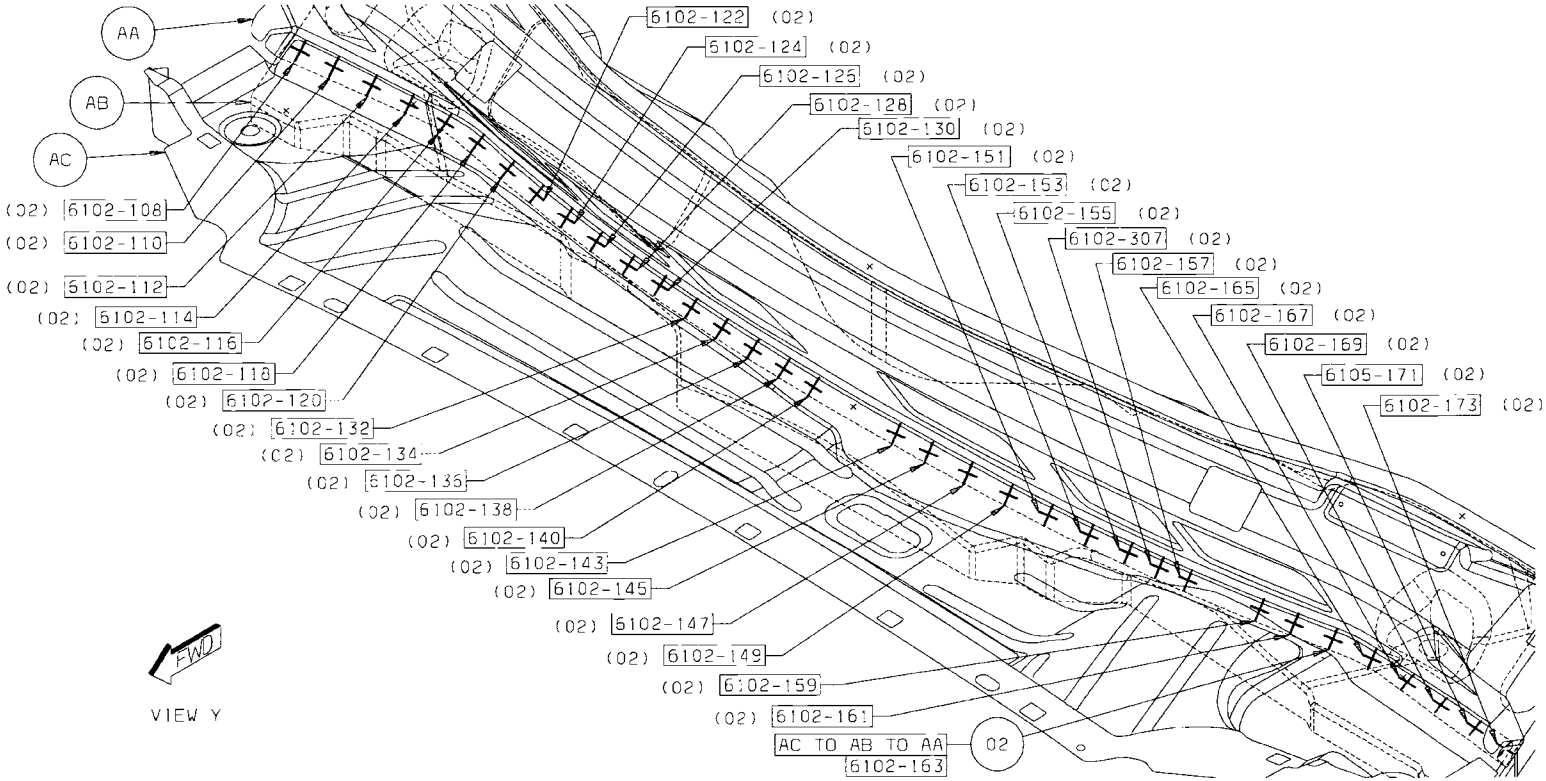

Back to Index

03 AD TO AC 35 S/WELDS (ORD)

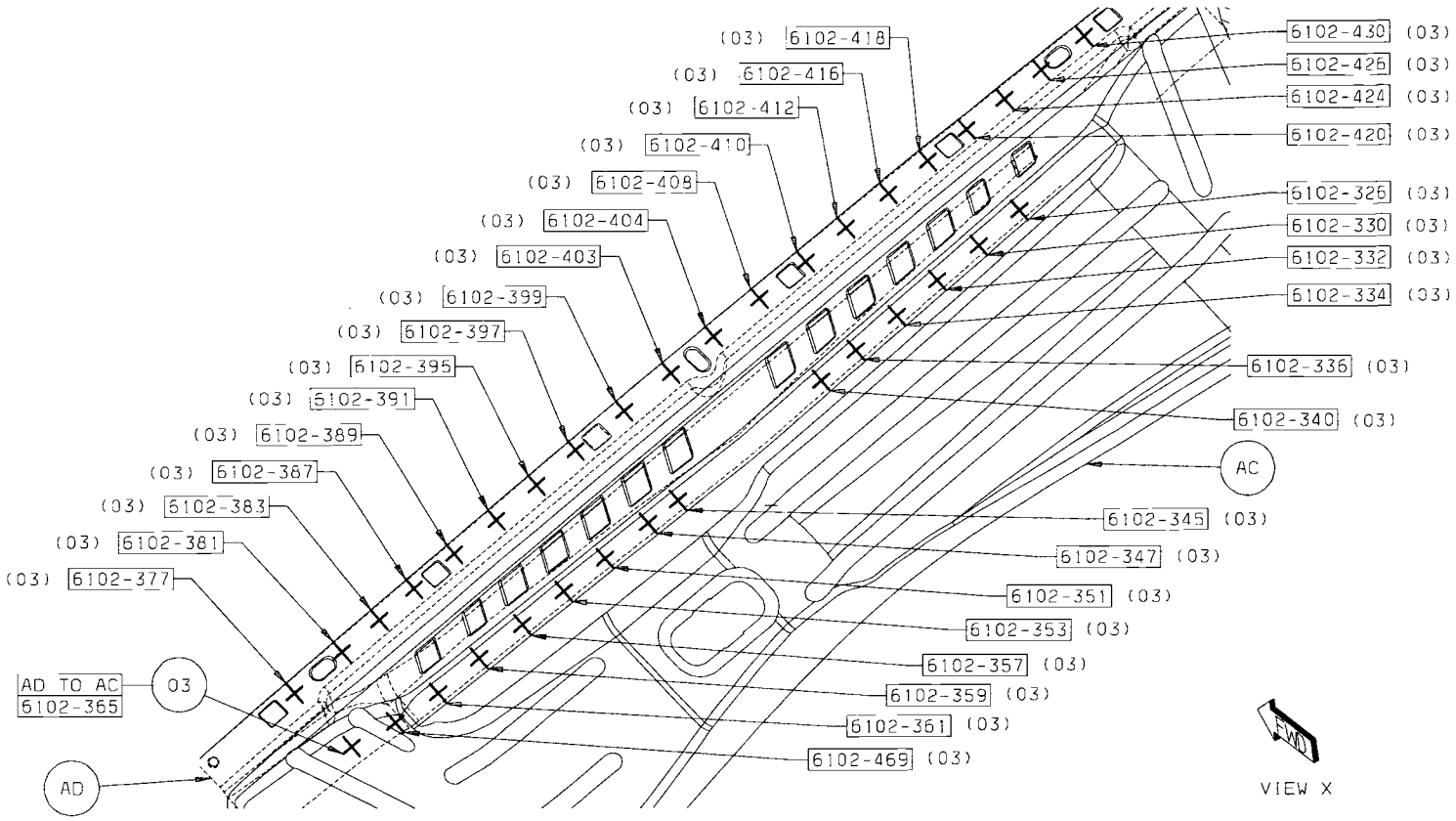

Back to Index

04 AE TO AA 4 S/WELDS (ORD)
05 AF TO AC 4 PROJ WELDS
06 AH TO AC 3 S/WELDS (ORD)
07 AH TO AG 1 PROJ WELD
08 AH TO AD TO AC 2 S/WELDS (ORD)

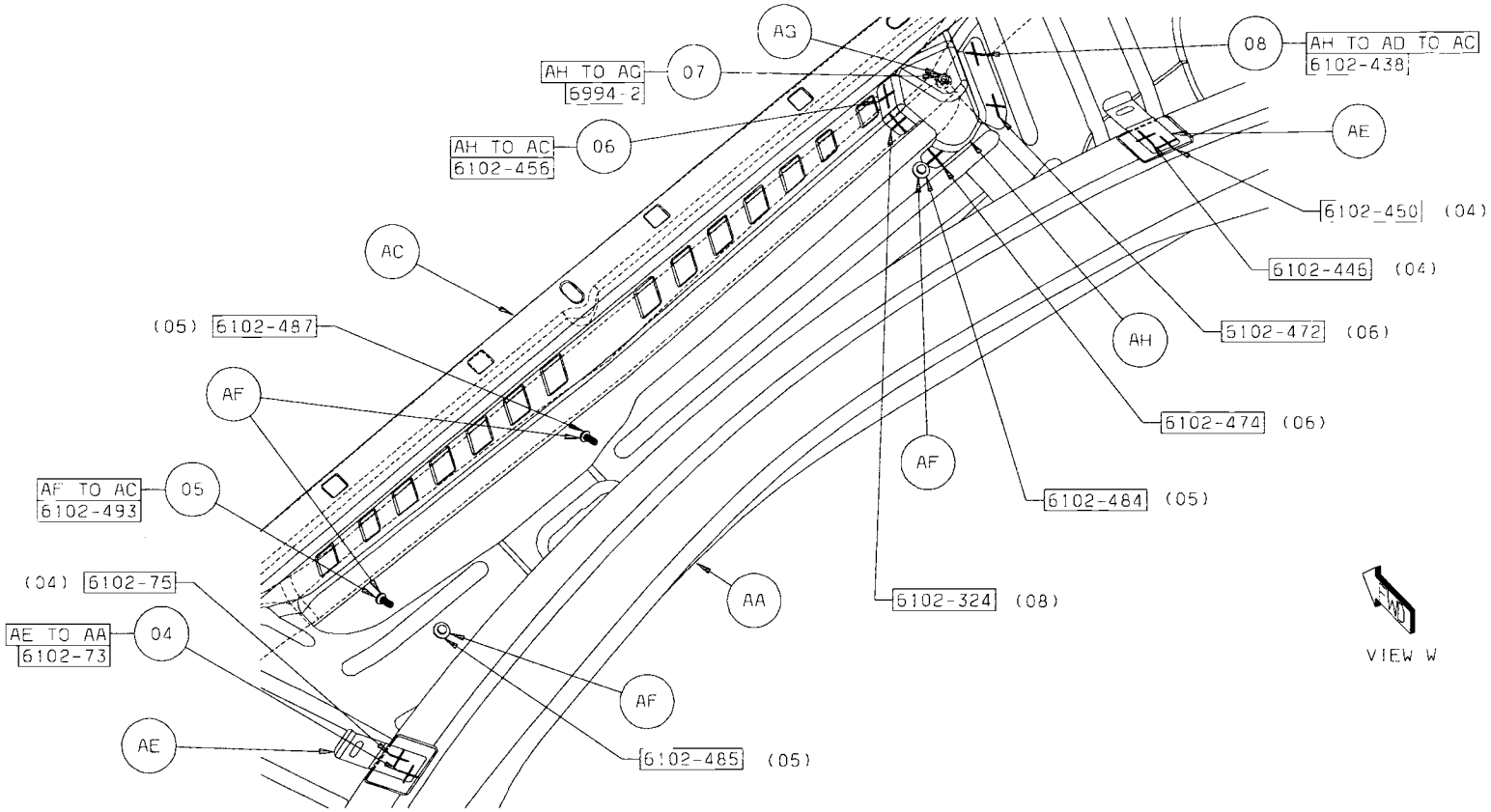

Back to Index

09 AJ TO AD TO AC 3 S/WELDS (ORD)
10 AJ TO AG 2 PROJ WELDS
11 AJ TO AA 3 S/WELDS (ORD)
12 AK TO AB 1 STRUC ADH
13 AK TO AA 4 S/WELDS (ORD)
14 AK TO AJ TO AA 1 S/WELD (ORD)

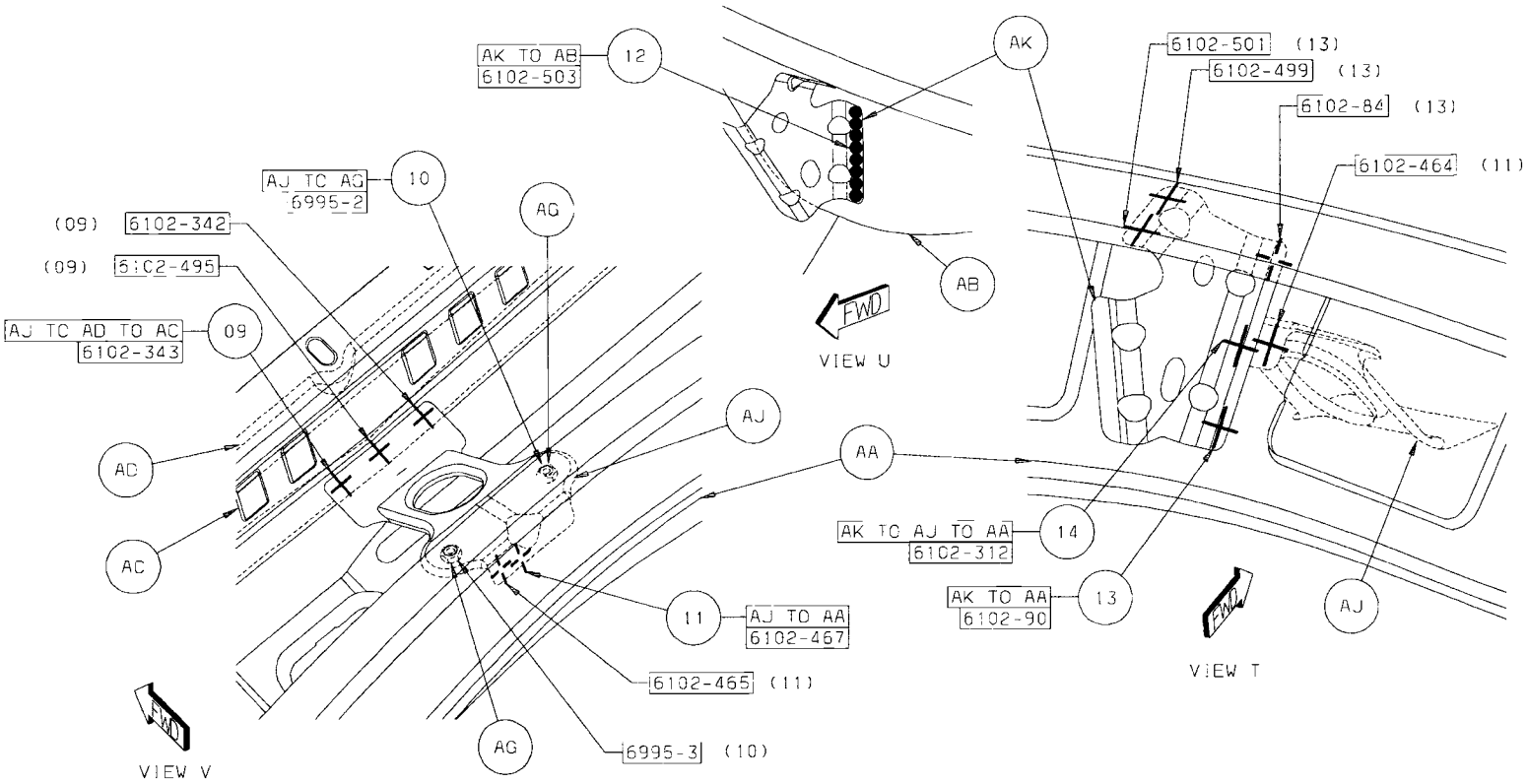

Back to Index

15 AL TO AA 4 S/WELDS (ORD)
16 AN TO AA 4 S/WELDS (ORD)
17 AN TO AG 1 PROJ WELD
18 AM TO AA 1 STRUC ADH

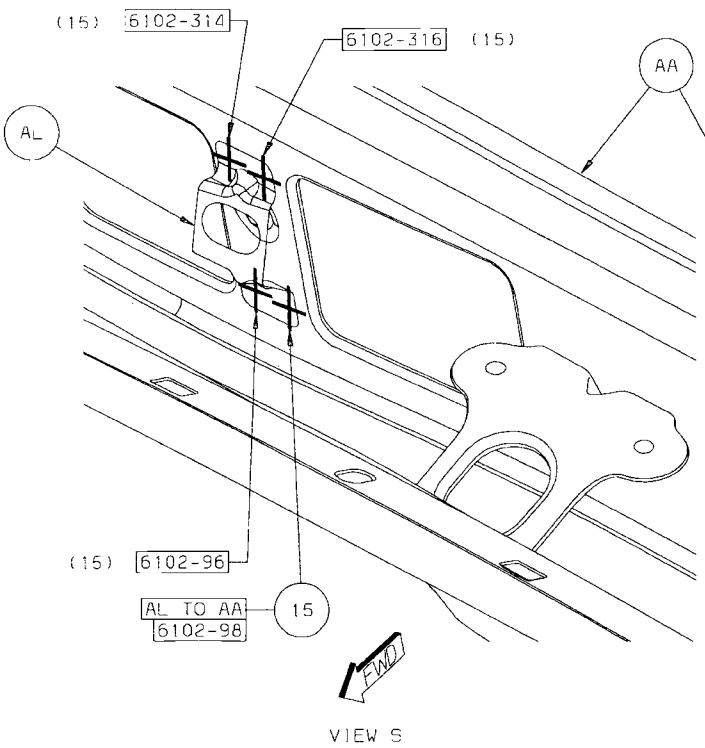

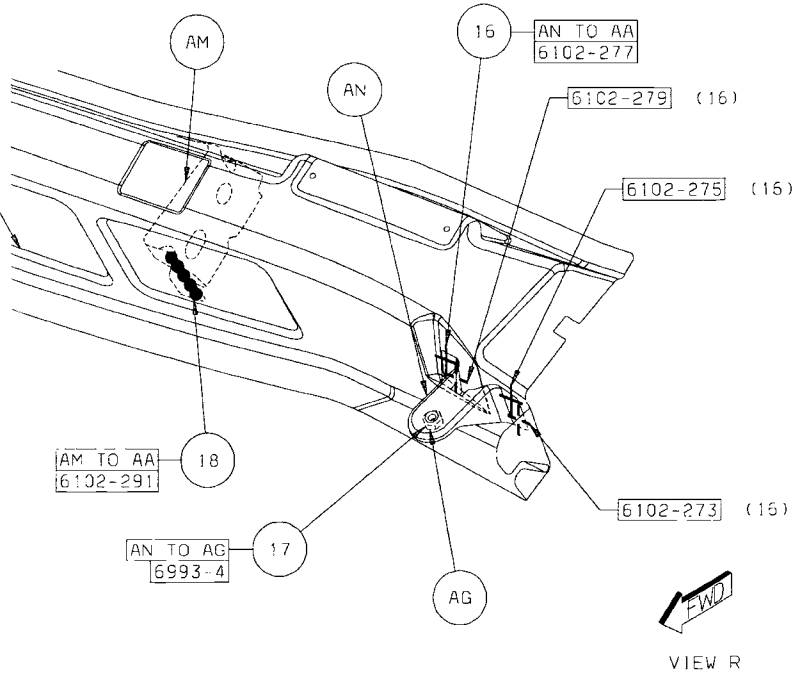

Back to Index

19 AR TO AB 4 S/WELDS (ORD)
20 AS TO AB 2 PROJ WELD
21 AM TO AB 2 S/WELDS (ORD)
22 AT TO AM 1 PROJ WELD
23 AR TO AM TO AB 1 S/WELD (ORD)
24 AR TO AP 1 PROJ WELD
25 AV TO AB 3 S/WELDS (ORD)
26 AU TO AB 2 PROJ WELDS
27 AW TO AB 1 PROJ WELD

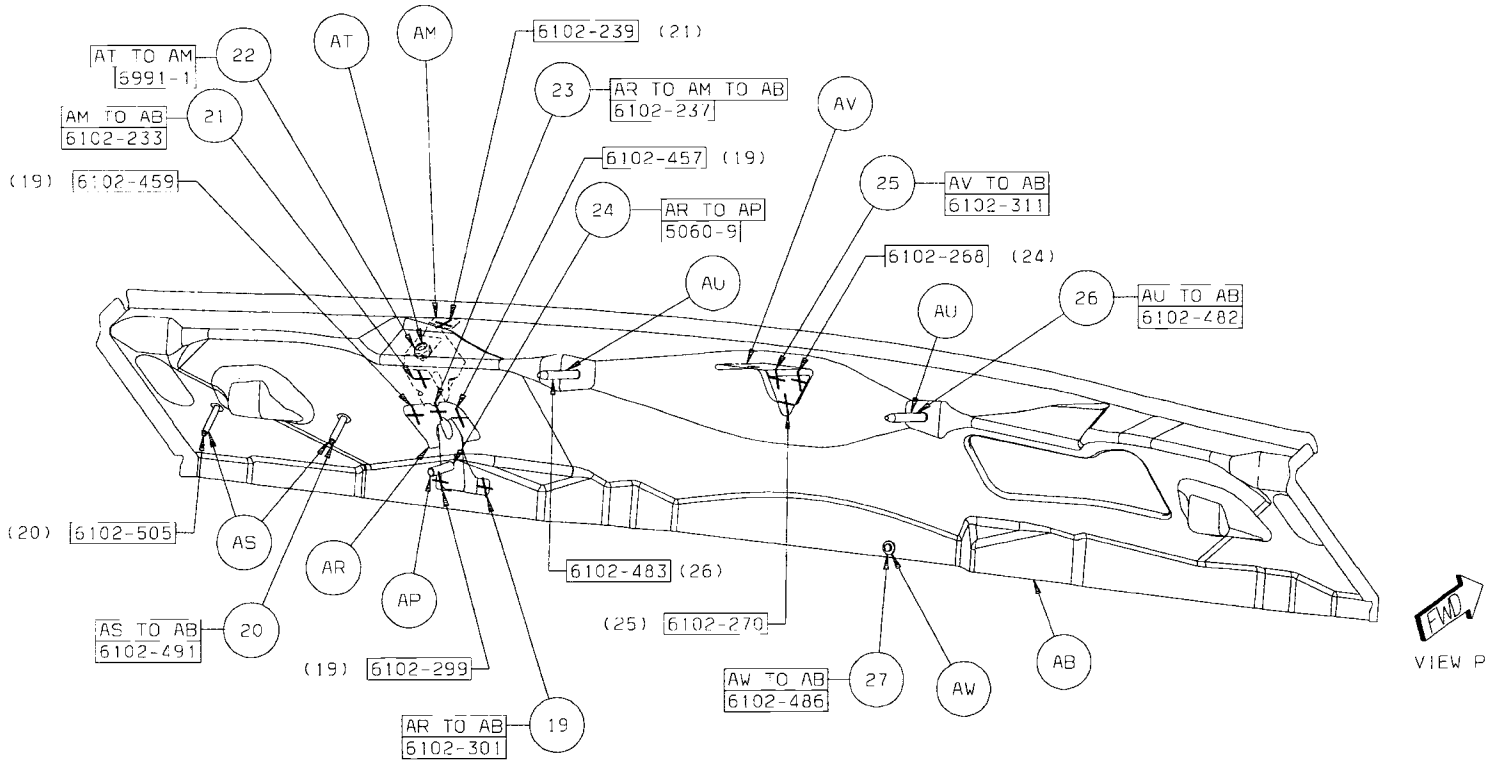

Back to Index

CHRYSLER SEBRING/DODGE AVENGER PLENUM/COWL (COMMON) SECTION

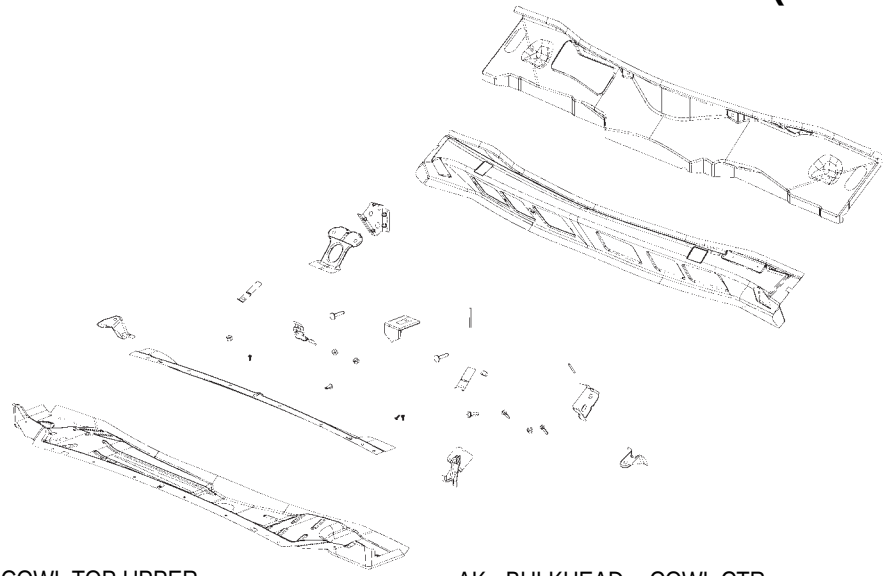

AA PANEL – COWL TOP UPPER –
AB PANEL – COWL TOP INNER –
AC PANEL – COWL TOP LOWER –
AD BRACE – FRT SHOCK TOWER –
AE BRACKET – WINDSHIELD –
AF STUD.WELD/EXTERNAL – SPECIAL – WIPER MTR WIRE HARNESS TO PLENUM
AF STUD.WELD/EXTERNAL – SPECIAL – DASH SILENCER TO PLENUM
AG NUT/WELD.HEX – THICK – COWL PLENUM CTR TO WIPER ARM
AG NUT/WELD.HEX – THICK – COWL PLENUM CTR TO WIPER ARM
AG NUT/WELD.HEX – THICK – COWL PLENUM CTR TO WIPER ARM
AH BRACKET – COWL PLENUM LWR WIPER MOTOR ATTACHMENT –
AJ BRACKET – WINDSHIELD WIPER ATTACHMENT CENTER –
AK BULKHEAD – COWL CTR –
AL BRACKET – COWL PLENUM LWR WIPER MOTOR ATTACHMENT –
AM BULKHEAD – COWL PLENUM LT –
AN BRACKET – WIPER MODULE MTG –
AP STUD.WELD/INTERNAL – HEADER.PT.NIBS.NO.FIN – BRAKE PEDAL TO PLENUM
AR BRACKET – BRAKE PEDAL –
AS STUD.WELD/EXTERNAL – PNT.CUTTER.PILOT.PT.SPECIAL – BODY WIRING HARNESS TO PLENUM
AT NUT/WELD.HEX – NIBS.NO.FIN.PILOT.PT – BULKHEAD TO LWR PLENUM
AU STUD.WELD.UNTHREADED – NIBS.NO.FIN.FIA.UNTHREADED – I/P TO PLENUM
AV BRACKET – COWL PLENUM CTR –
AW STUD.WELD.EXTERNAL – PNT.CUTTER.PILOT.PT.SPECIAL – DASH HEAT SHIELD TO PLENUM

Back to Index

PARTS IDENTIFICATION LEGEND, OVERVIEW 4

AA PANEL – COWL TOP UPPER –
AB PANEL – COWL TOP INNER –
AC PANEL – COWL TOP LOWER –
AD BRACE – FRT SHOCK TOWER –
AE BRACKET – WINDSHIELD –
AF STUD.WELD/EXTERNAL – SPECIAL – WIPER MTR WIRE HARNESS TO PLENUM
AF STUD.WELD/EXTERNAL – SPECIAL – DASH SILENCER TO PLENUM
AG NUT/WELD.HEX – THICK – COWL PLENUM CTR TO WIPER ARM
AG NUT/WELD.HEX – THICK – COWL PLENUM CTR TO WIPER ARM
AG NUT/WELD.HEX – THICK – COWL PLENUM CTR TO WIPER ARM
AH BRACKET – COWL PLENUM LWR WIPER MOTOR ATTACHMENT –
AJ BRACKET – WINDSHIELD WIPER ATTACHMENT CENTER –
AK BULKHEAD – COWL CTR –
AL BRACKET – COWL PLENUM LWR WIPER MOTOR ATTACHMENT –
AM BULKHEAD – COWL PLENUM LT –
AN BRACKET – WIPER MODULE MTG –
AP STUD.WELD/INTERNAL – HEADER.PT.NIBS.NO.FIN – BRAKE PEDAL TO PLENUM
AR BRACKET – BRAKE PEDAL –
AS STUD.WELD/EXTERNAL – PNT.CUTTER.PILOT.PT.SPECIAL – BODY WIRING HARNESS TO PLENUM
AT NUT/WELD.HEX – NIBS.NO.FIN.PILOT.PT – BULKHEAD TO LWR PLENUM
AU STUD.WELD.UNTHREADED – NIBS.NO.FIN.FIA.UNTHREADED – I/P TO PLENUM
AV BRACKET – COWL PLENUM CTR –
AW STUD.WELD.EXTERNAL – PNT.CUTTER.PILOT.PT.SPECIAL – DASH HEAT SHIELD TO PLENUM

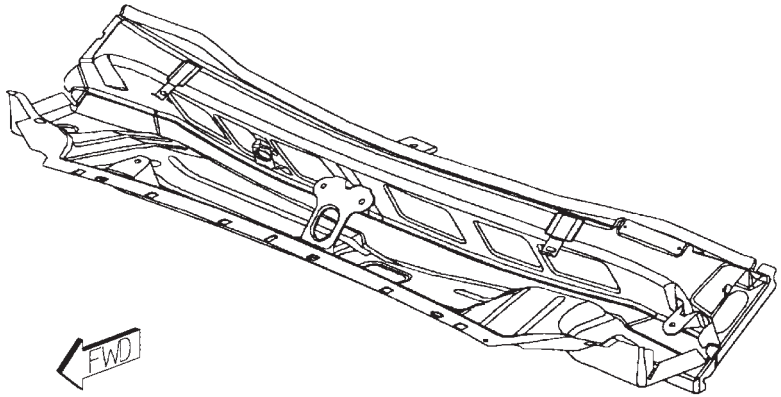

Back to Index

WELD LAYOUT LOCATION GUIDE

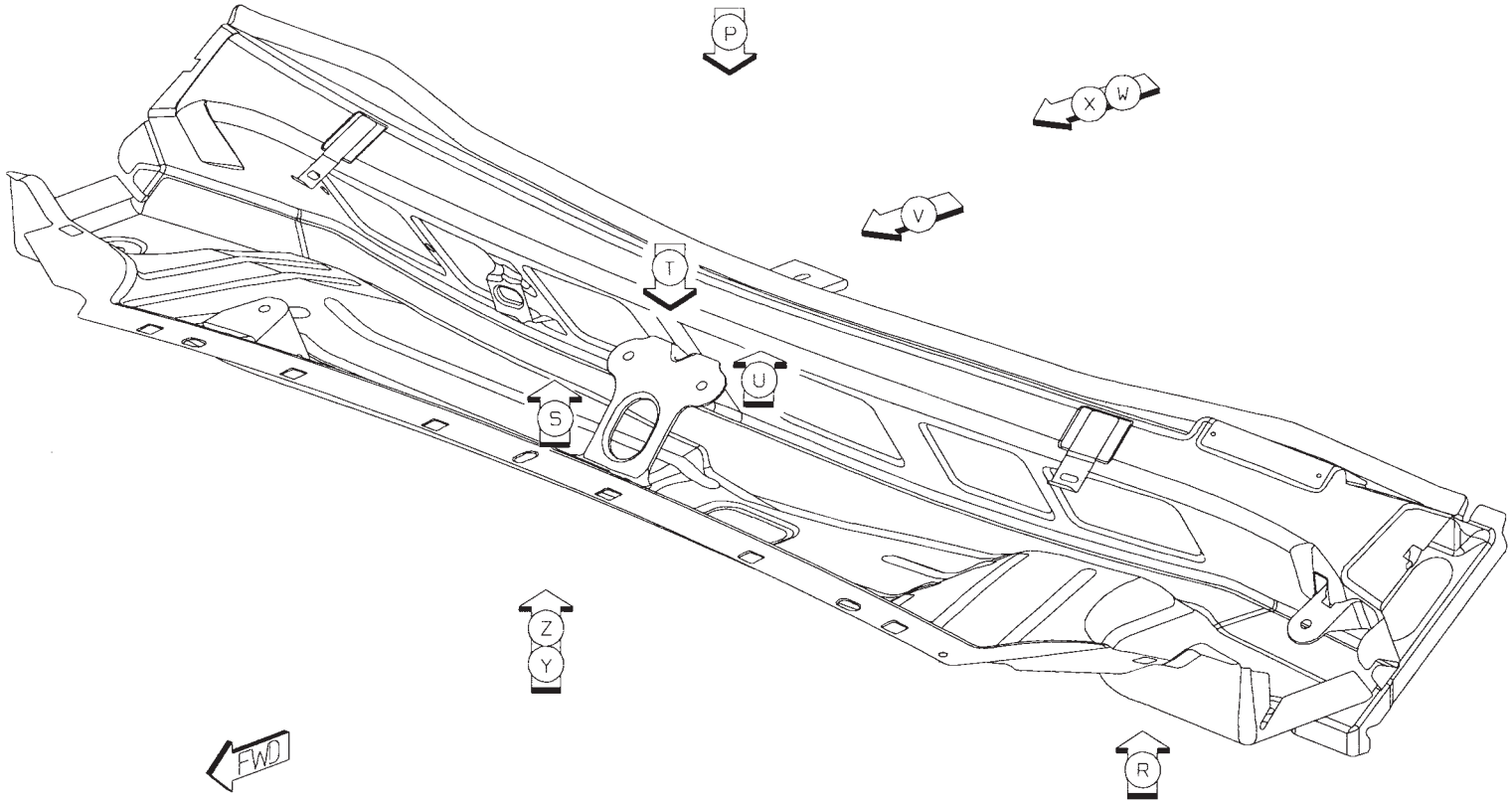

Back to Index

01 AB TO AA 35 S/WELDS (ORD)

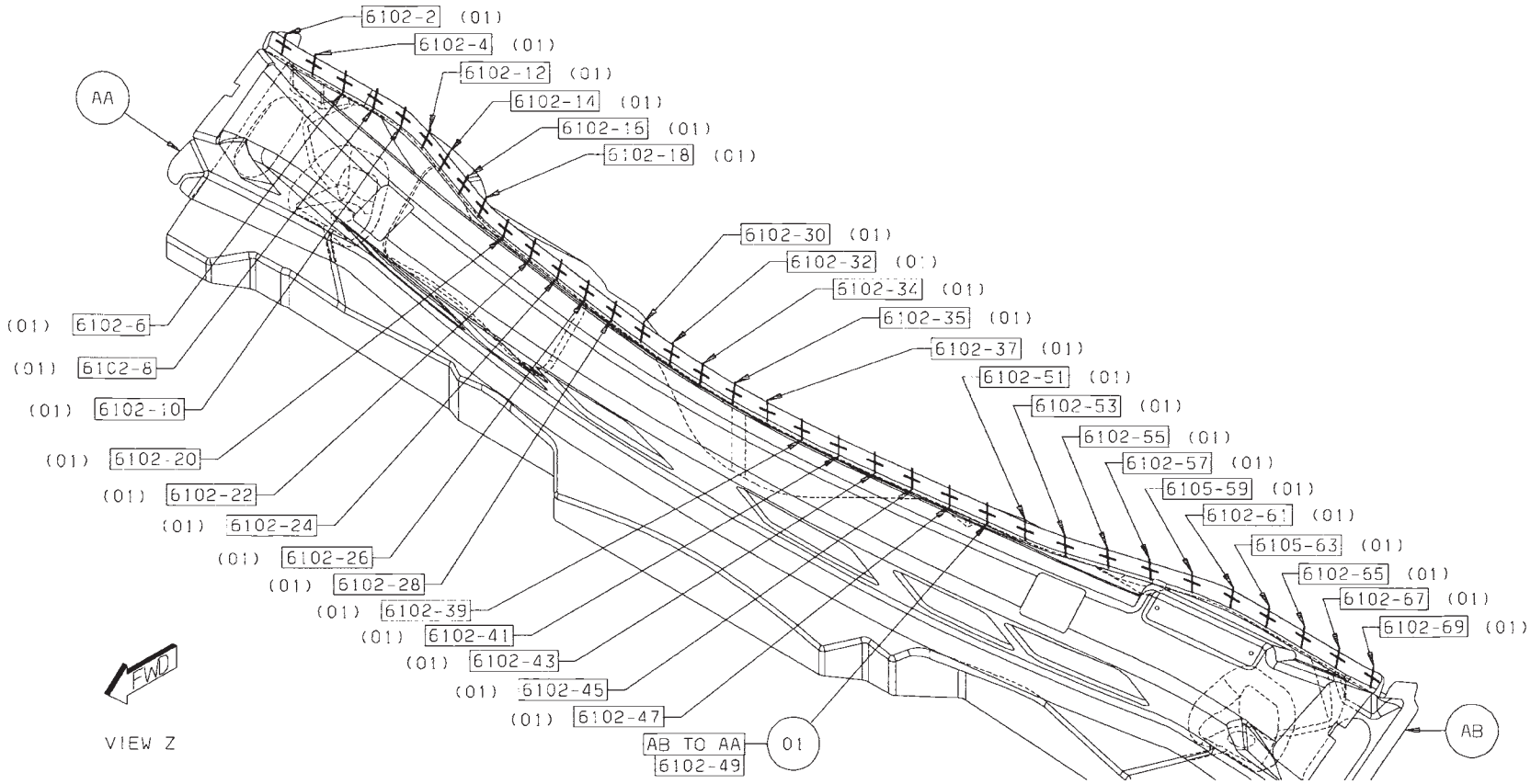

Back to Index

02 AC TO AB TO AA 34 S/WELDS (ORD)

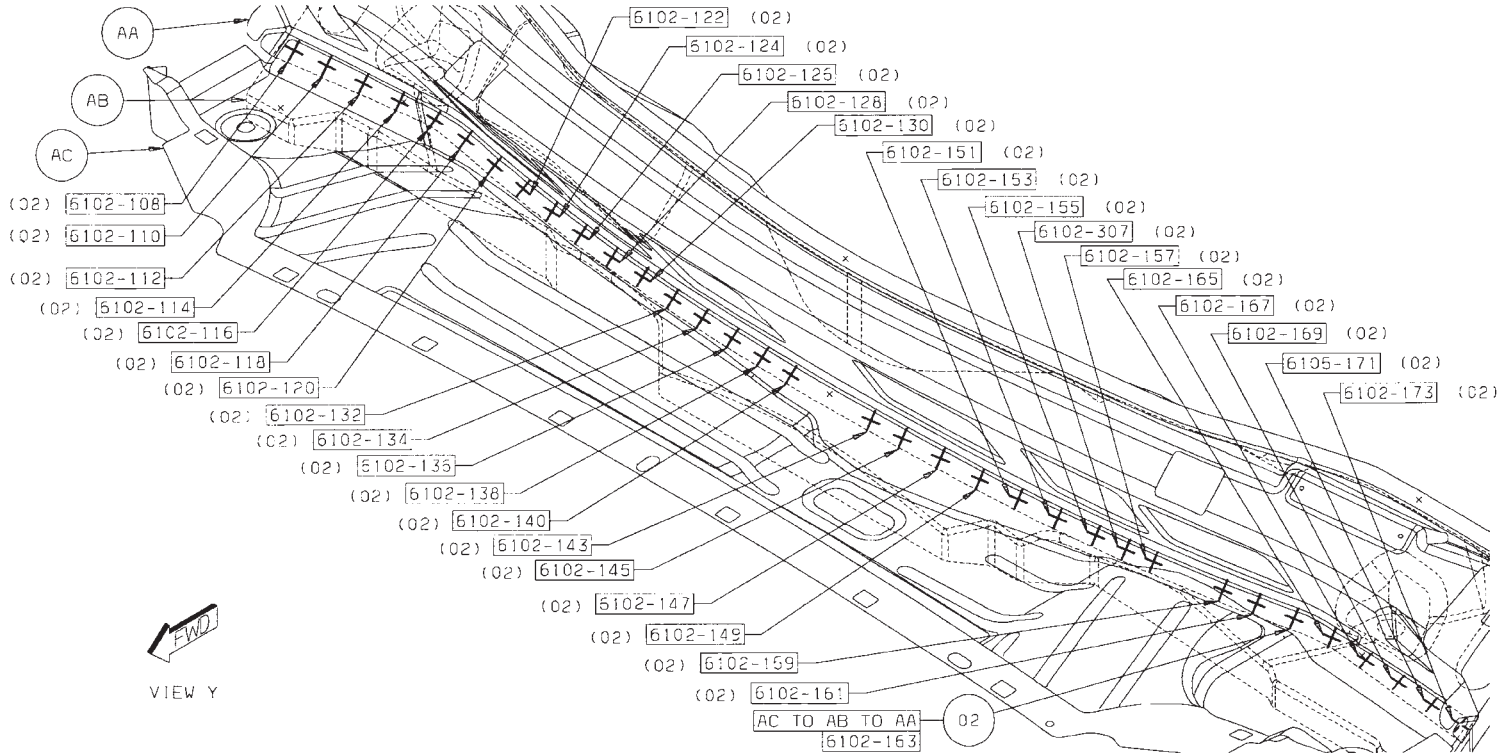

Back to Index

03 AD TO AC 35 S/WELDS (ORD)

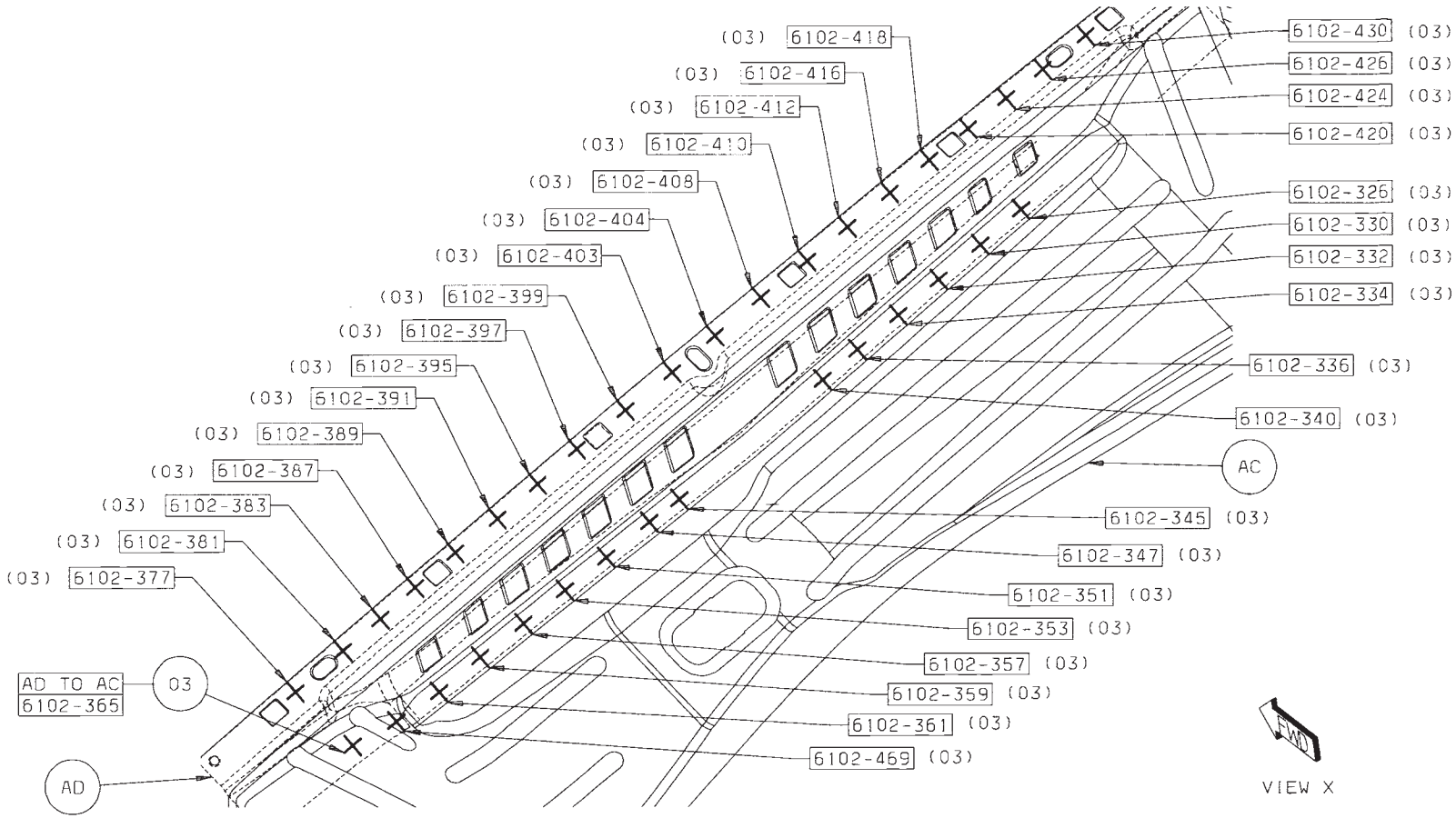

Back to Index

04 AE TO AA 4 S/WELDS (ORD)
05 AF TO AC 4 PROJ WELDS
06 AH TO AC 3 S/WELDS (ORD)
07 AH TO AG 1 PROJ WELD
08 AH TO AD TO AC 2 S/WELDS (ORD)

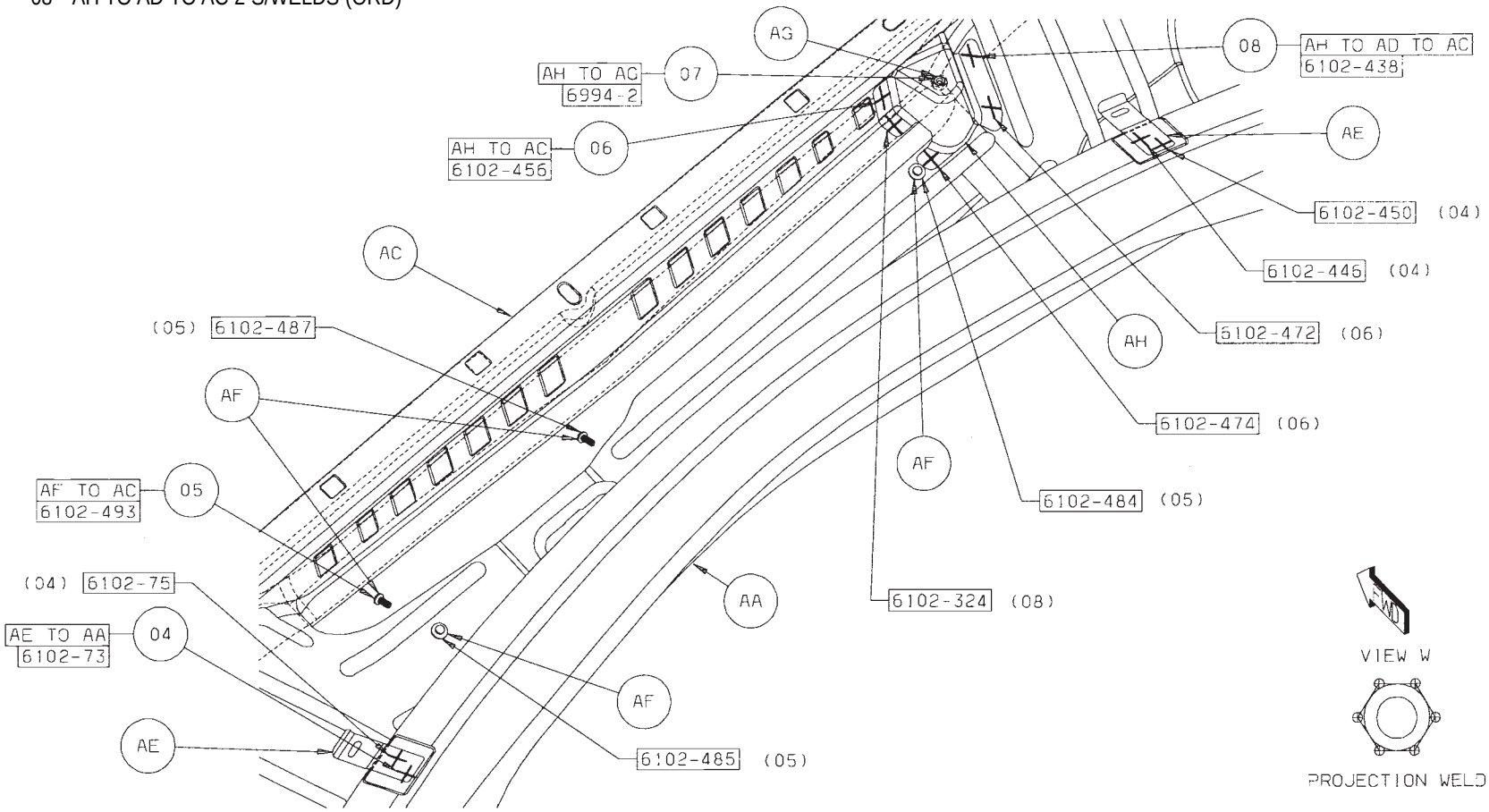

Back to Index

09 AJ TO AD TO AC 3 S/WELDS (ORD)
10 AJ TO AG 2 PROJ WELDS
11 AJ TO AA 3 S/WELDS (ORD)
12 AK TO AB 1 STRUC ADH
13 AK TO AA 4 S/WELDS (ORD)
14 AK TO AJ TO AA 1 S/WELD (ORD)

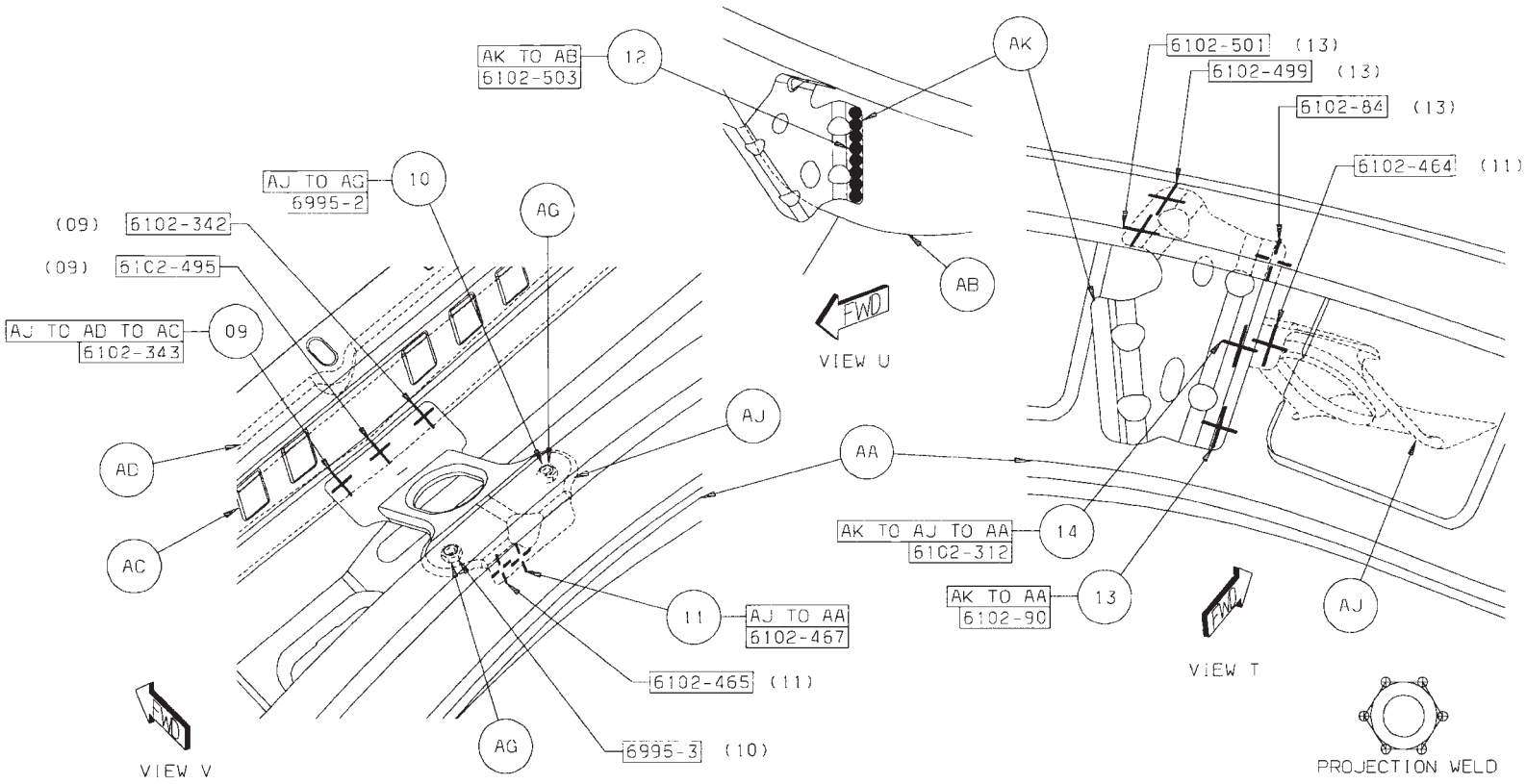

Back to Index

15 AL TO AA 4 S/WELDS (ORD)
16 AN TO AA 4 S/WELDS (ORD)
17 AN TO AG 1 PROJ WELD
18 AM TO AA 1 STRUC ADH

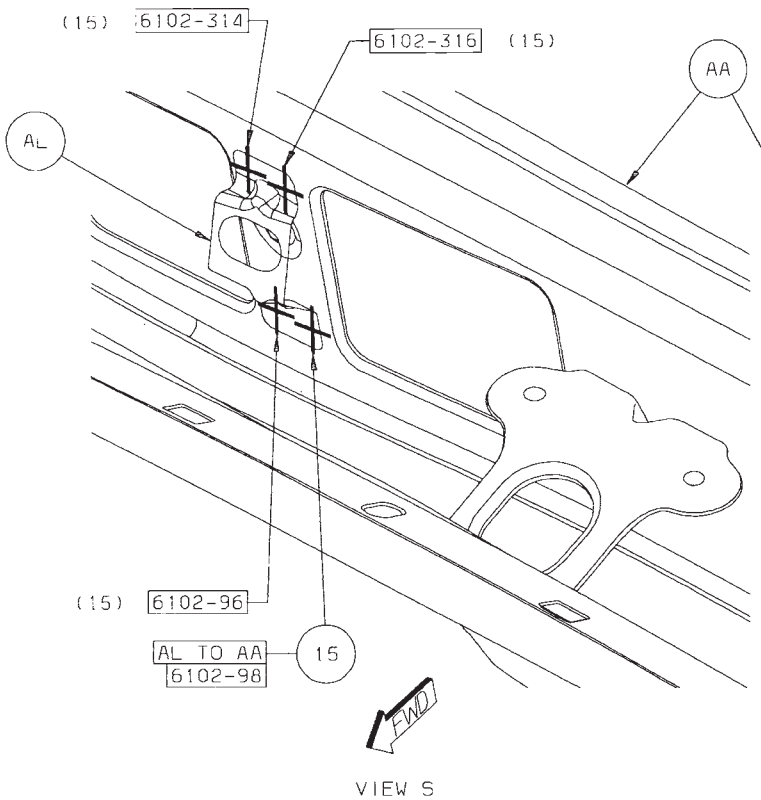

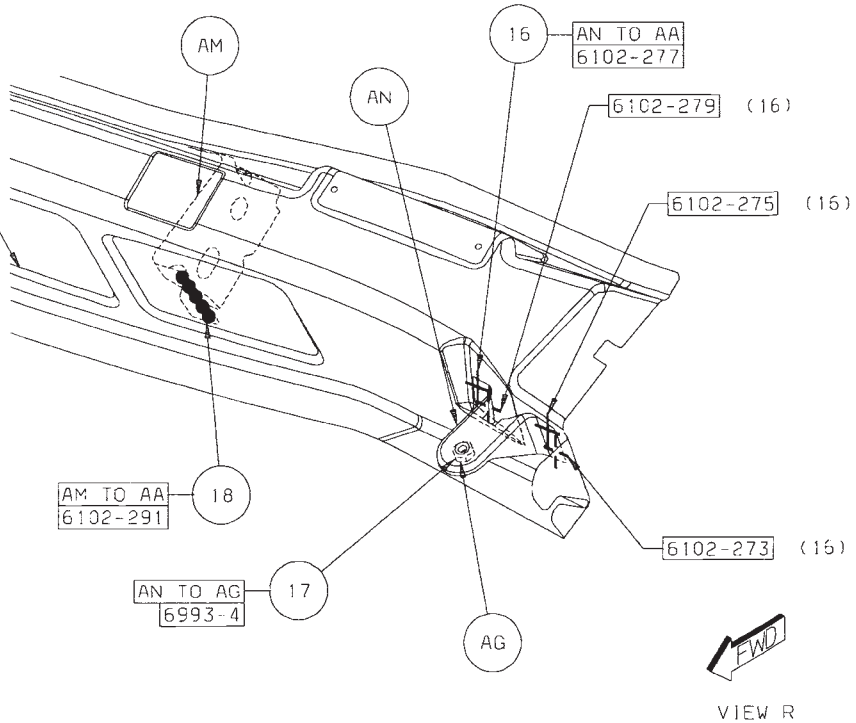

Back to Index

19 AR TO AB 4 S/WELDS (ORD)
20 AS TO AB 2 PROJ WELD
21 AM TO AB 2 S/WELDS (ORD)
22 AT TO AM 1 PROJ WELD
23 AR TO AM TO AB 1 S/WELD (ORD)
24 AR TO AP 1 PROJ WELD
25 AV TO AB 3 S/WELDS (ORD)
26 AU TO AB 2 PROJ WELDS
27 AW TO AB 1 PROJ WELD

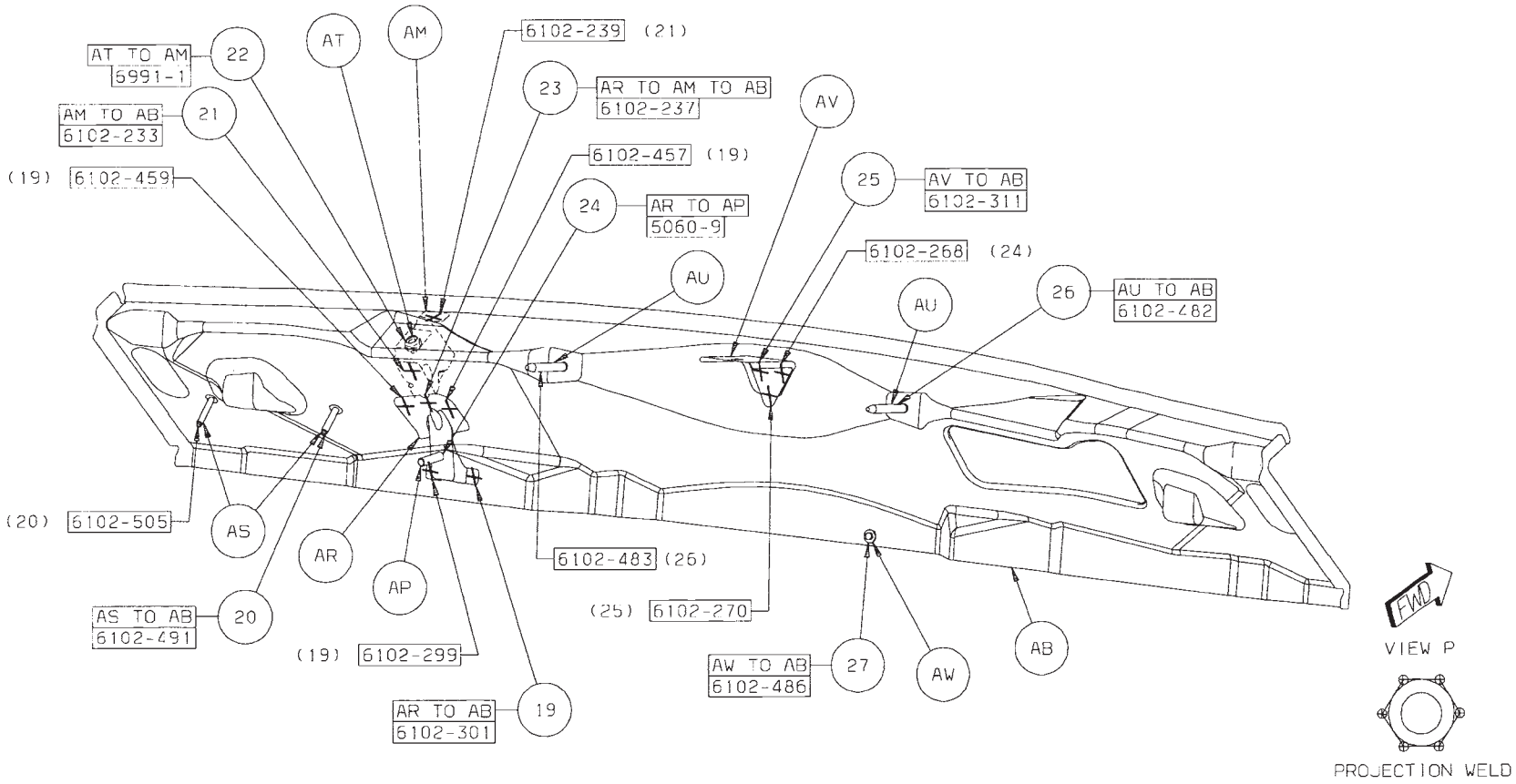

Back to Index

CHRYSLER SEBRING PLENUM/DASH SECTION

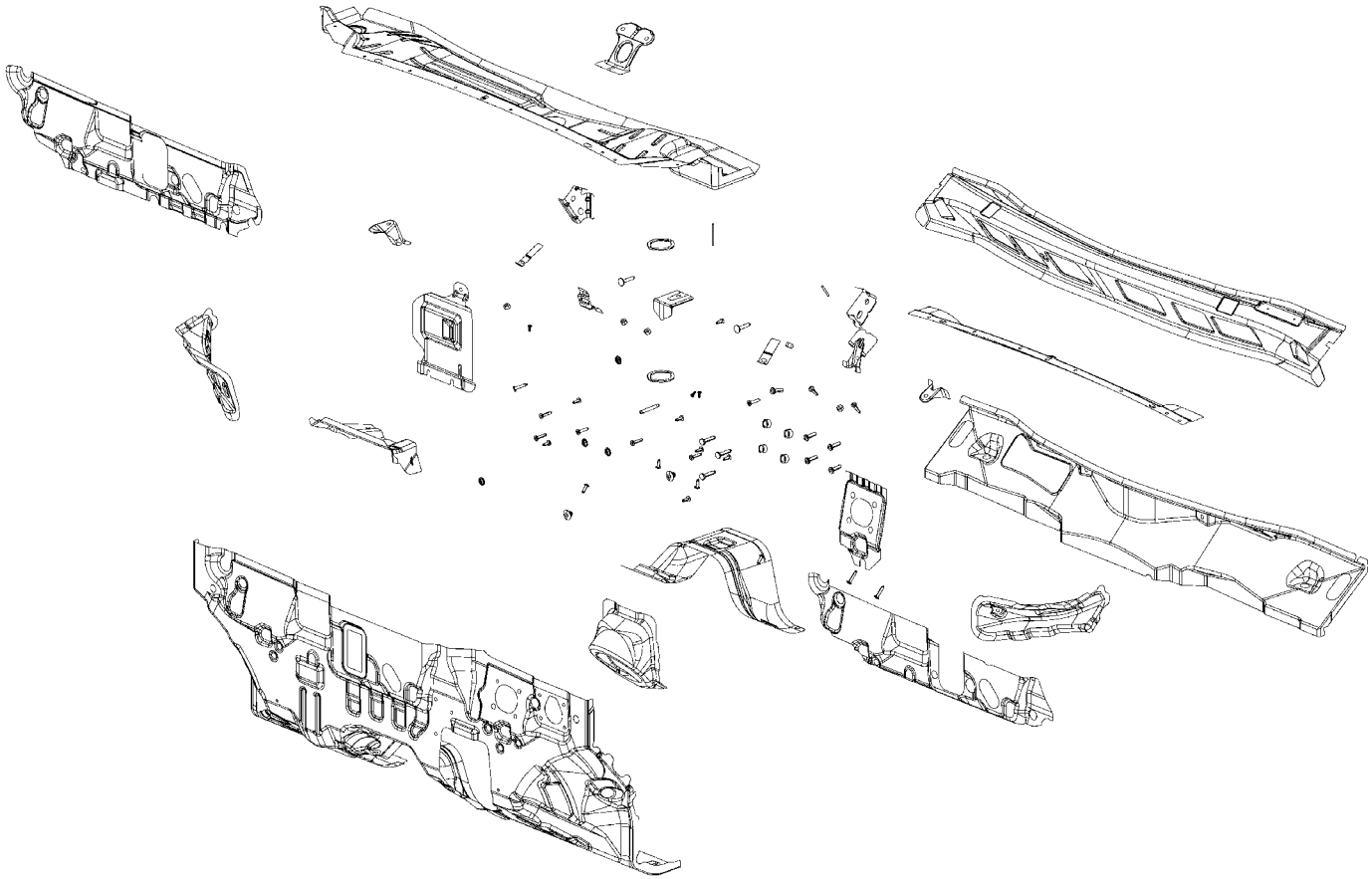

AA PANEL – COWL TOP INNER –
AB PANEL – DASH –
AC REINF – DASH PANEL –

Back to Index

PARTS IDENTIFICATION LEGEND, OVERVIEW 18

AA PANEL – COWL TOP INNER –
AB PANEL – DASH –
AC REINF – DASH PANEL –

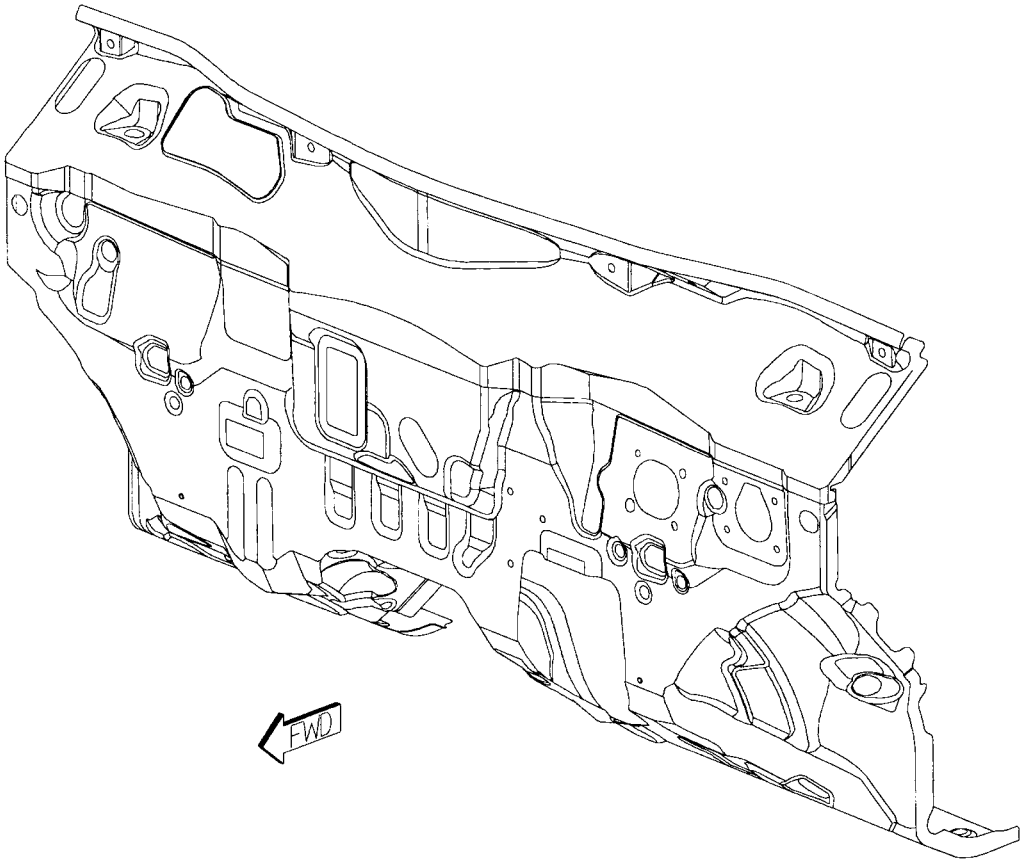

Back to Index

WELD LAYOUT LOCATION GUIDE

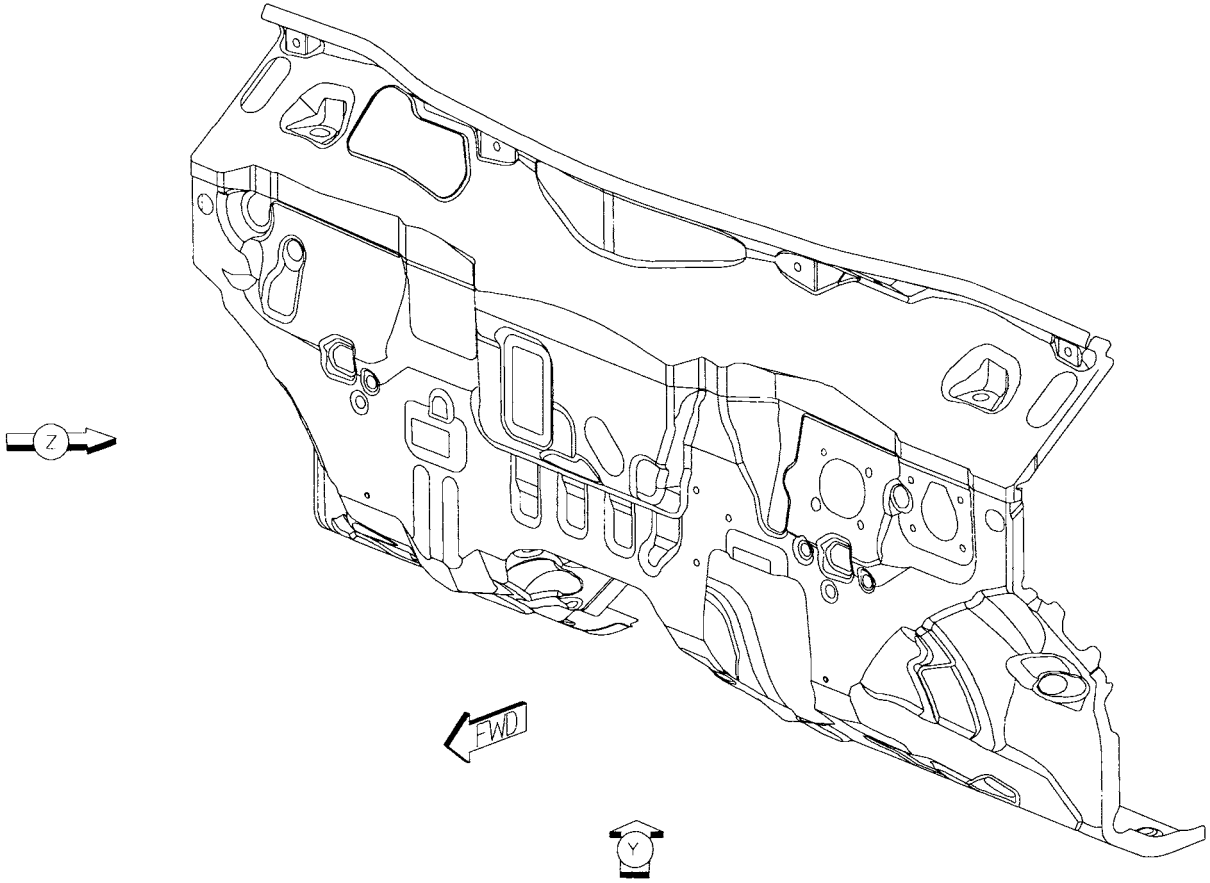

Back to Index

01 AA TO AB 27 S/WELDS (ORD)

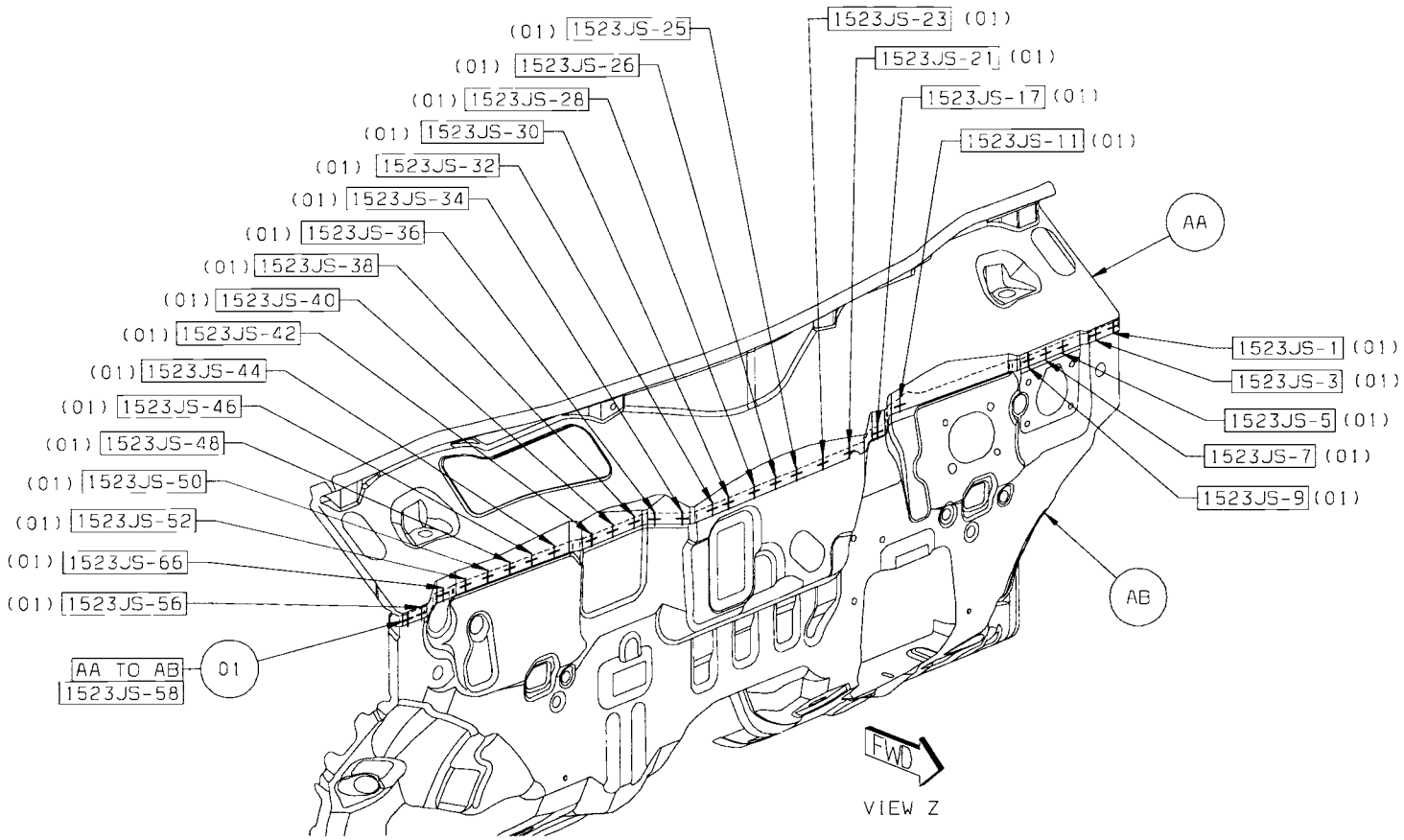

Back to Index

02 AA TO AB 4 S/WELDS (ORD)
03 AA TO AB TO AC 4 S/WELDS (ORD)

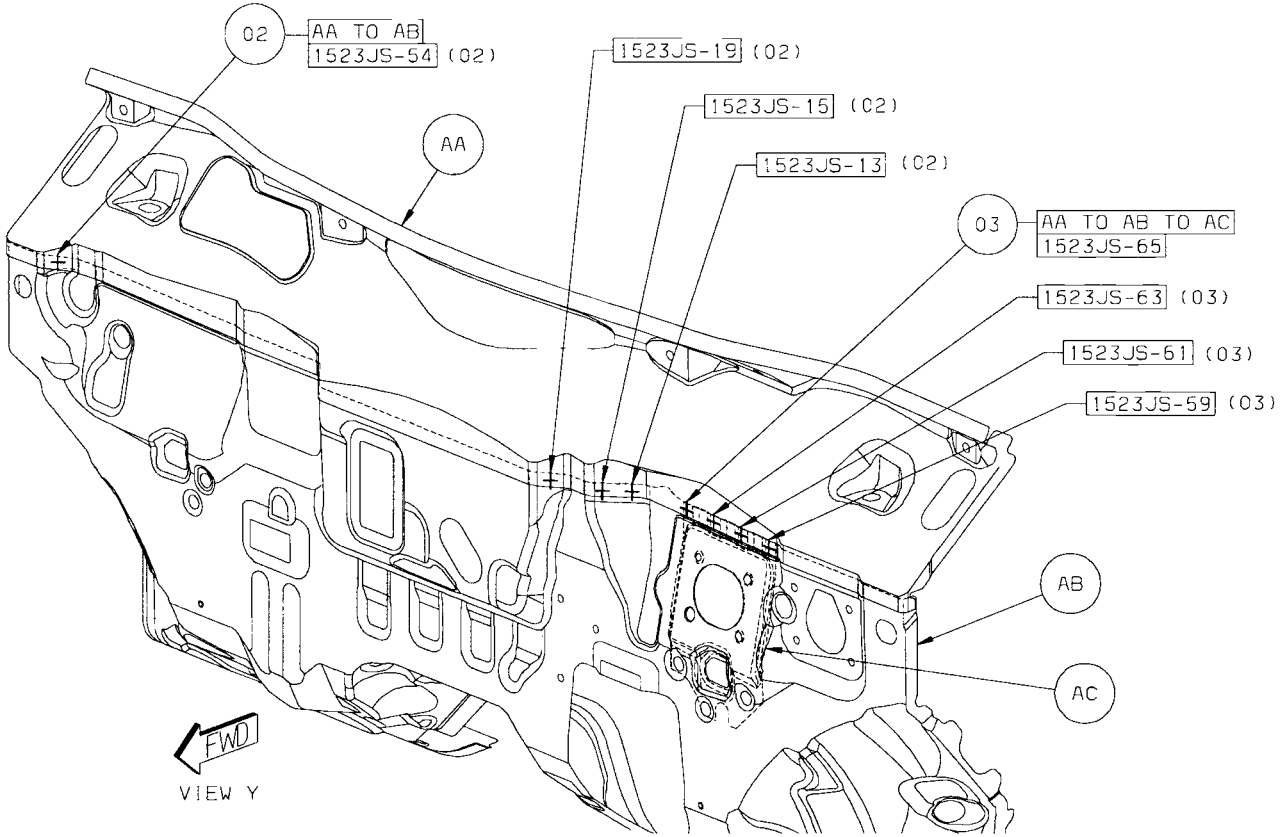

Back to Index

CHRYSLER SEBRING/DODGE AVENGER PLENUM/DASH (COMMON) SECTION

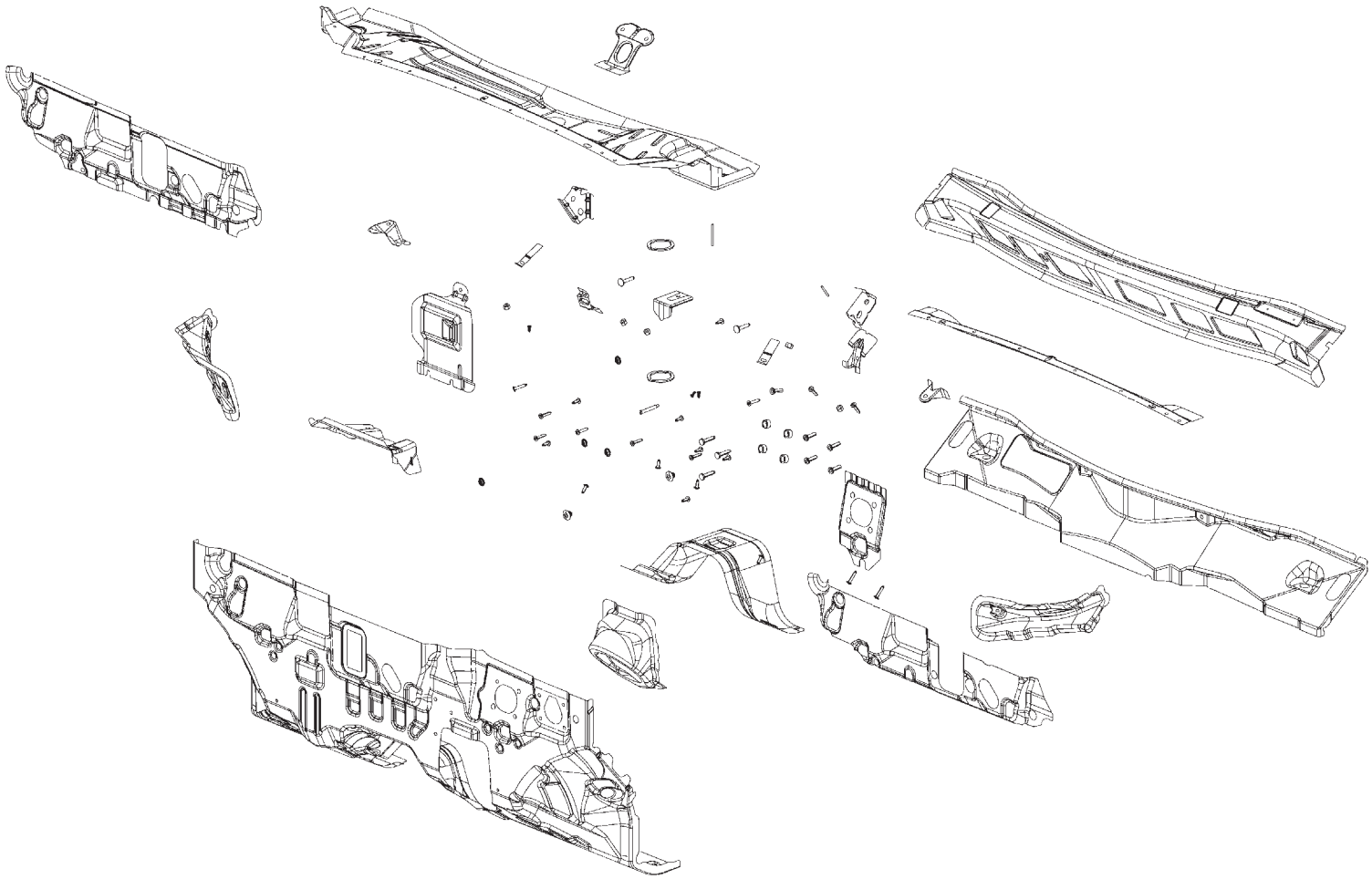

AA PANEL – COWL TOP INNER –
AB PANEL – DASH –
AC REINF – DASH PANEL –

Back to Index

PARTS IDENTIFICATION LEGEND, OVERVIEW 18

AA PANEL – COWL TOP INNER –
AB PANEL – DASH –
AC REINF – DASH PANEL –

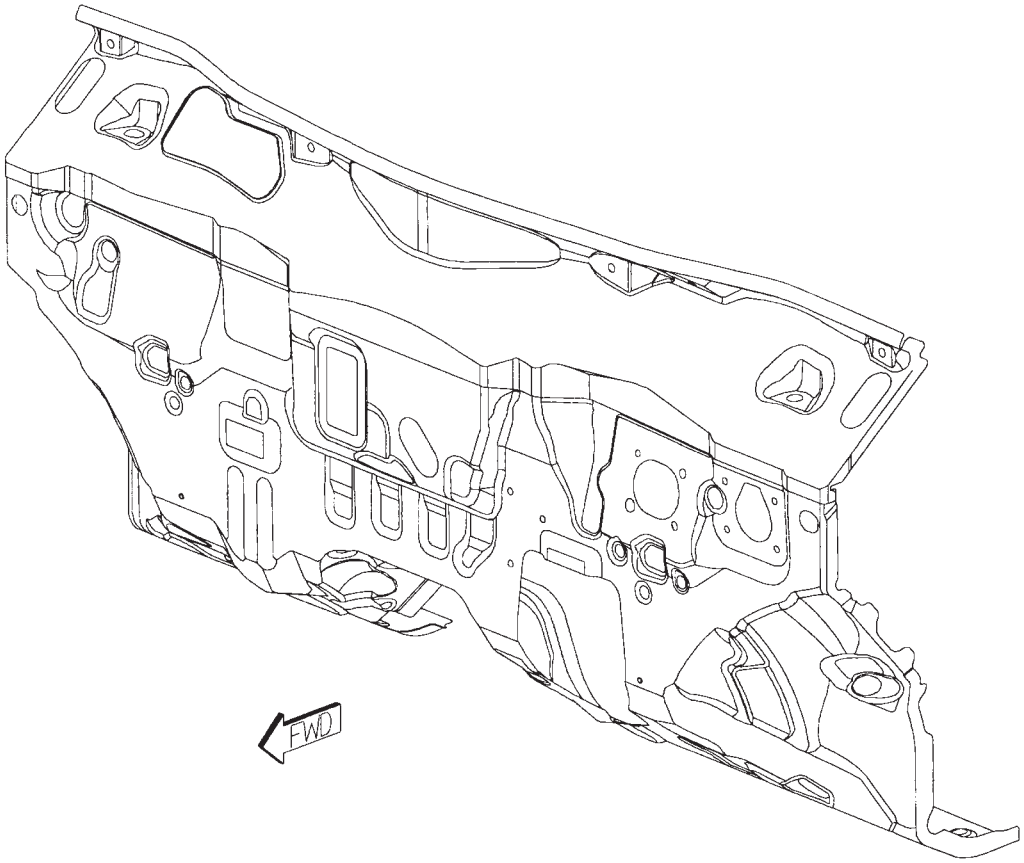

Back to Index

WELD LAYOUT LOCATION GUIDE

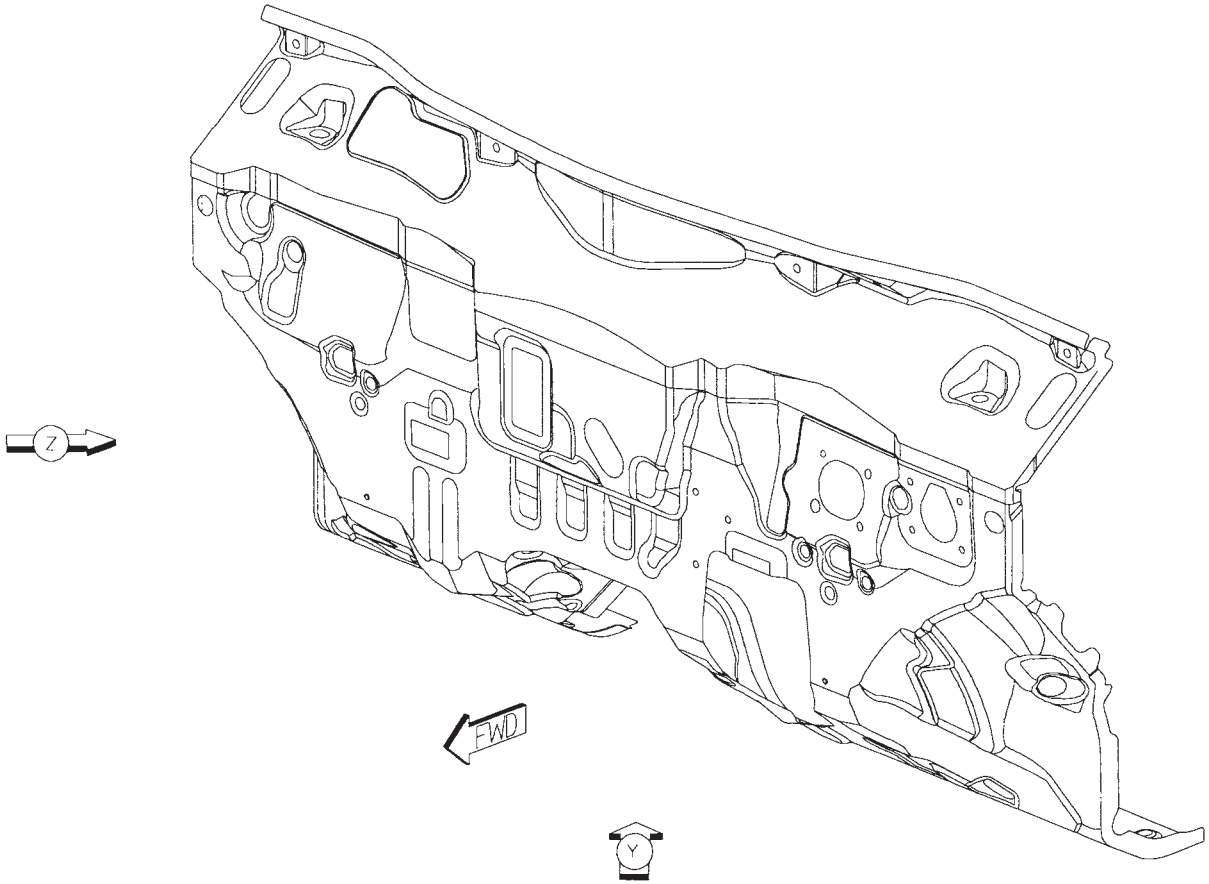

Back to Index

01 AA TO AB 27 S/WELDS (ORD)

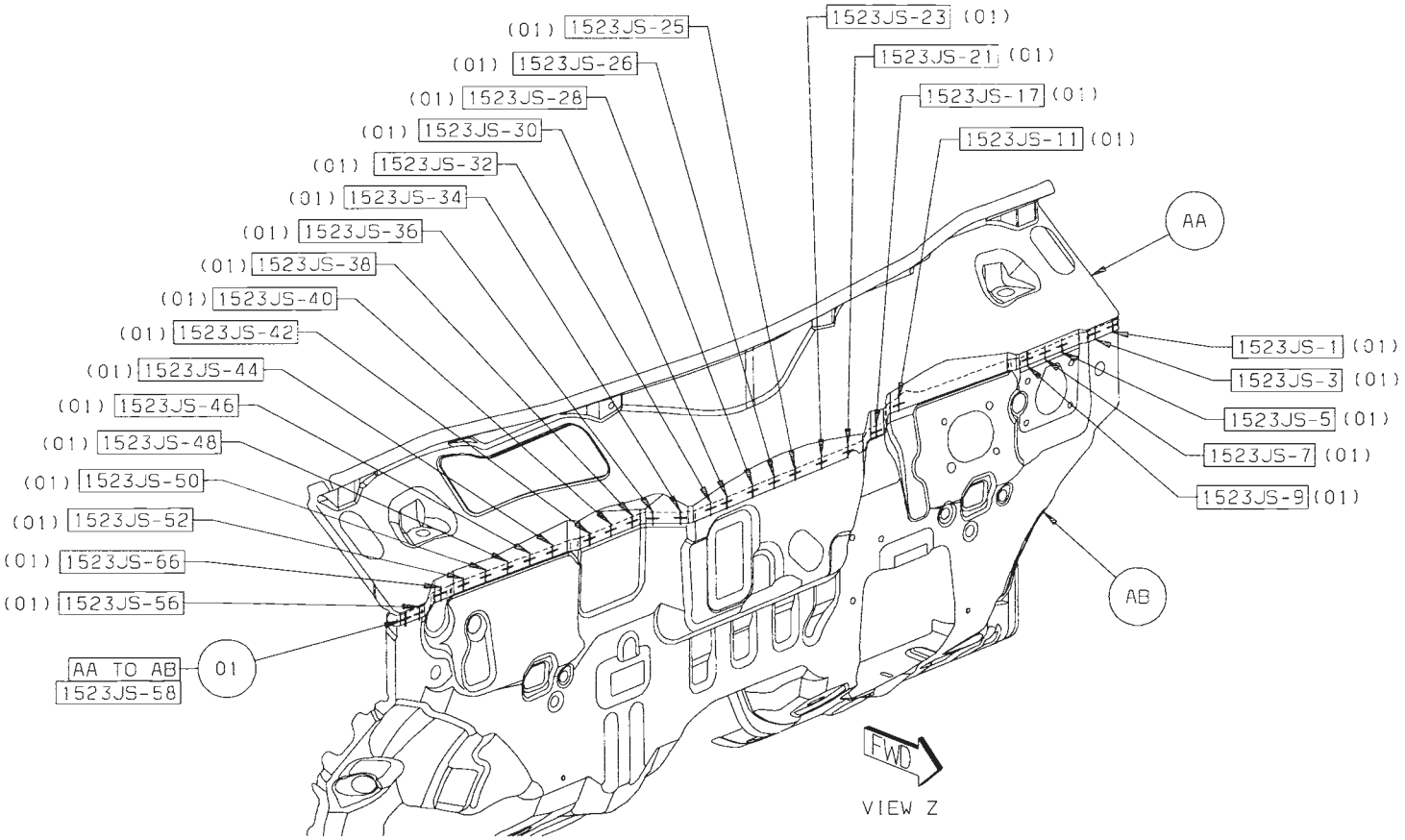

Back to Index

02 AA TO AB 4 S/WELDS (ORD)
03 AA TO AB TO AC 4 S/WELDS (ORD)

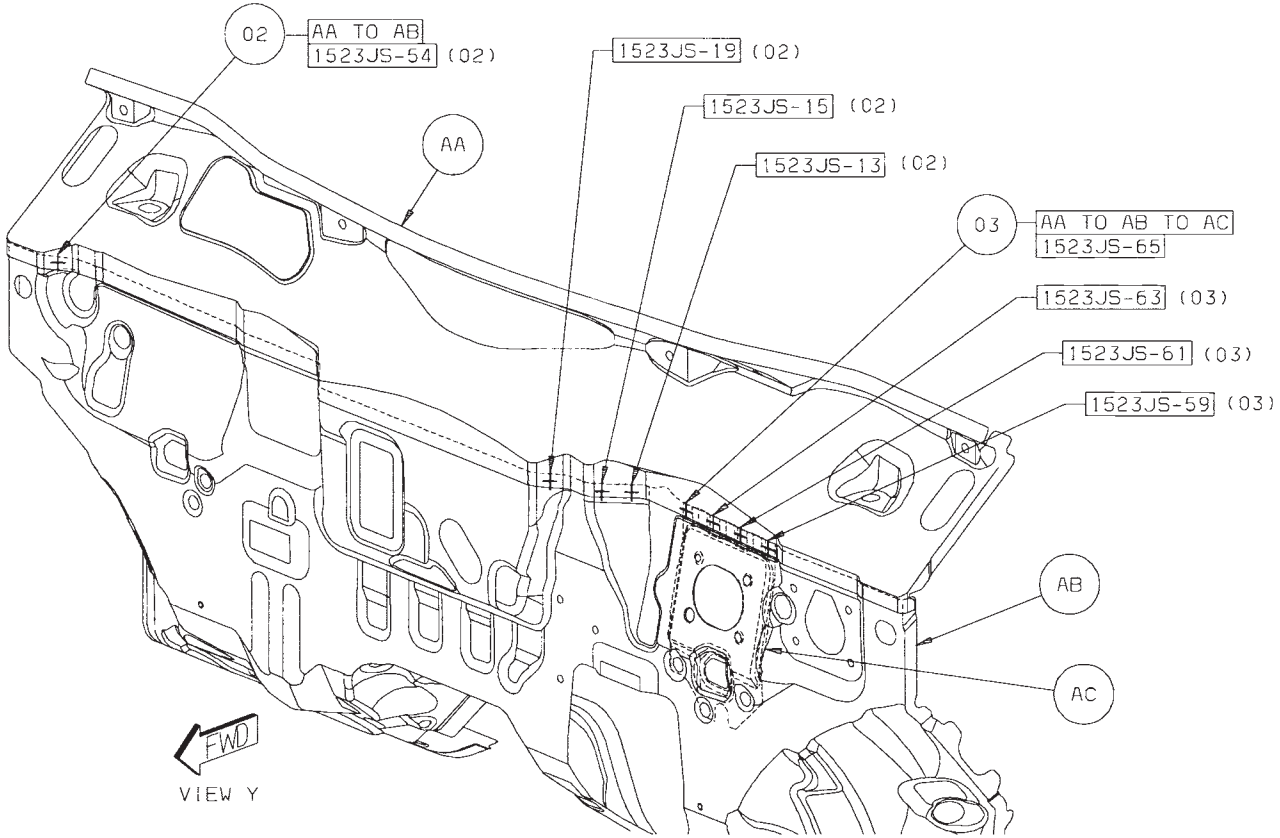

Back to Index

CHRYSLER SEBRING REAR CLOSURE SECTION

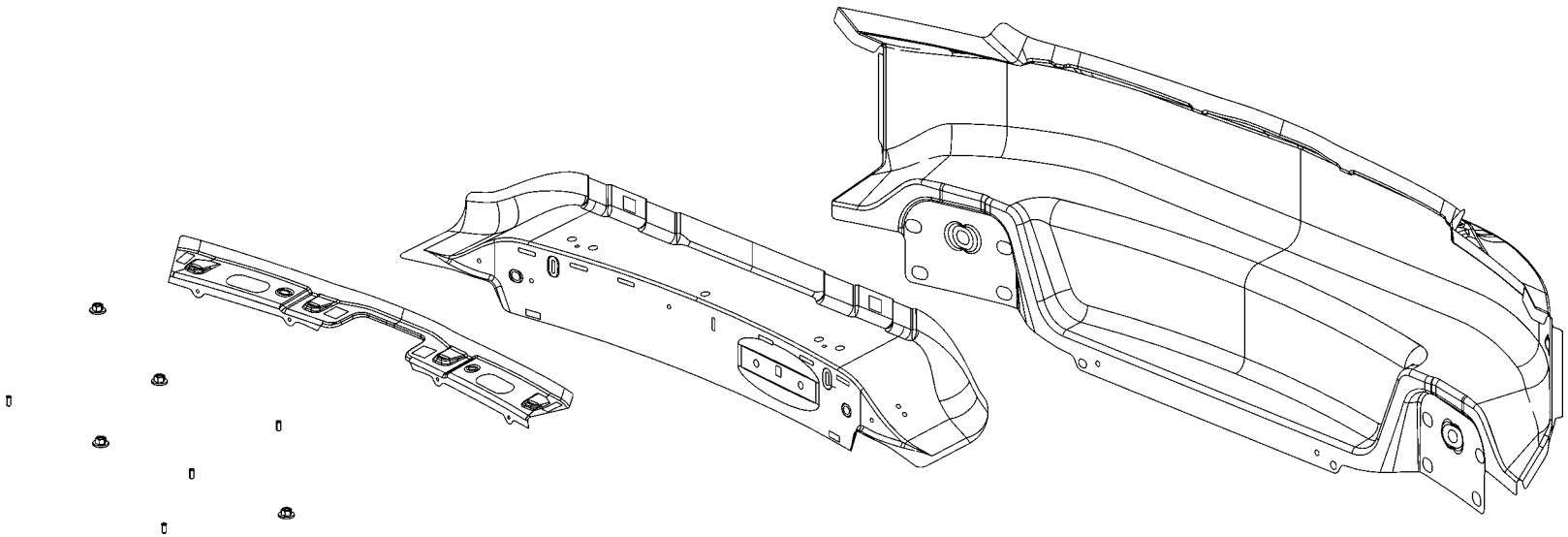

AA PANEL – RR CLOSURE OTR –
AB PANEL – RR CLOSURE INR –
AC RETAINER – TRIM –
AD NUT/WELD.HEX - NIBS.NO.FIN - HYDRAULIC PUMP TO PANEL
AD NUT/WELD.HEX – NIBS.NO.FIN – DECKLID BAR TO PANEL
AE STUD.WELD/EXTERNAL – HEADER.PT.PNT.CUTTER.SPECIAL – HYD LINES TO REAR CLOUSRE OTR

Back to Index

PARTS IDENTIFICATION LEGEND, OVERVIEW 8

AA PANEL – RR CLOSURE OTR –
AB PANEL – RR CLOSURE INR –
AC RETAINER – TRIM –
AD NUT/WELD.HEX - NIBS.NO.FIN - HYDRAULIC PUMP TO PANEL
AD NUT/WELD.HEX – NIBS.NO.FIN – DECKLID BAR TO PANEL
AE STUD.WELD/EXTERNAL – HEADER.PT.PNT.CUTTER.SPECIAL – HYD LINES TO REAR CLOUSRE OTR

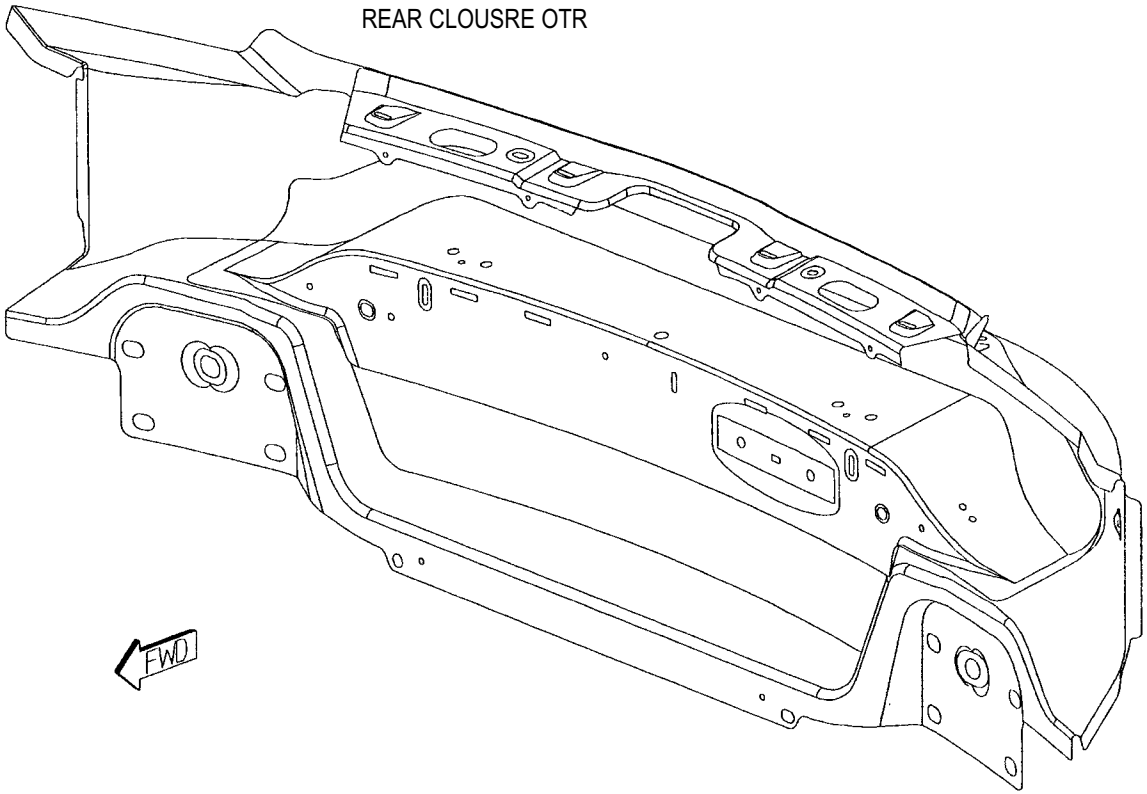

Back to Index

WELD LAYOUT LOCATION GUIDE

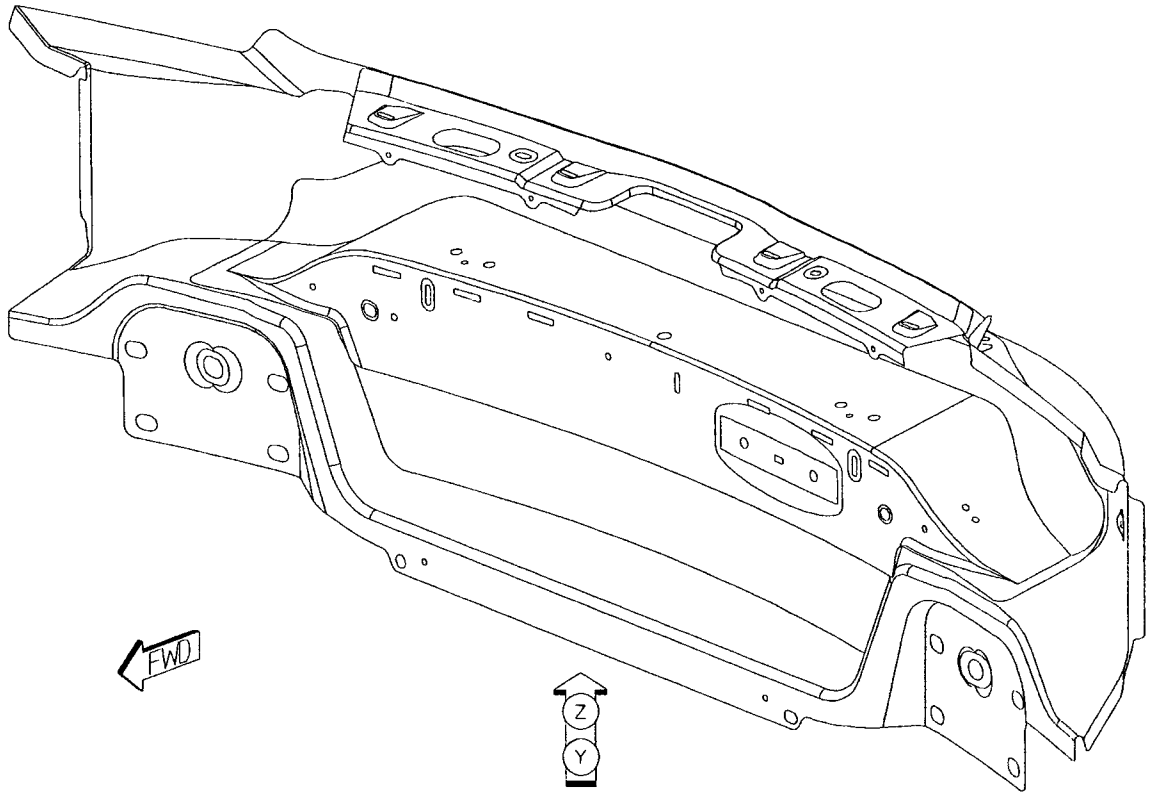

Back to Index

01 AB TO AA 45 S/WELDS (ORD)

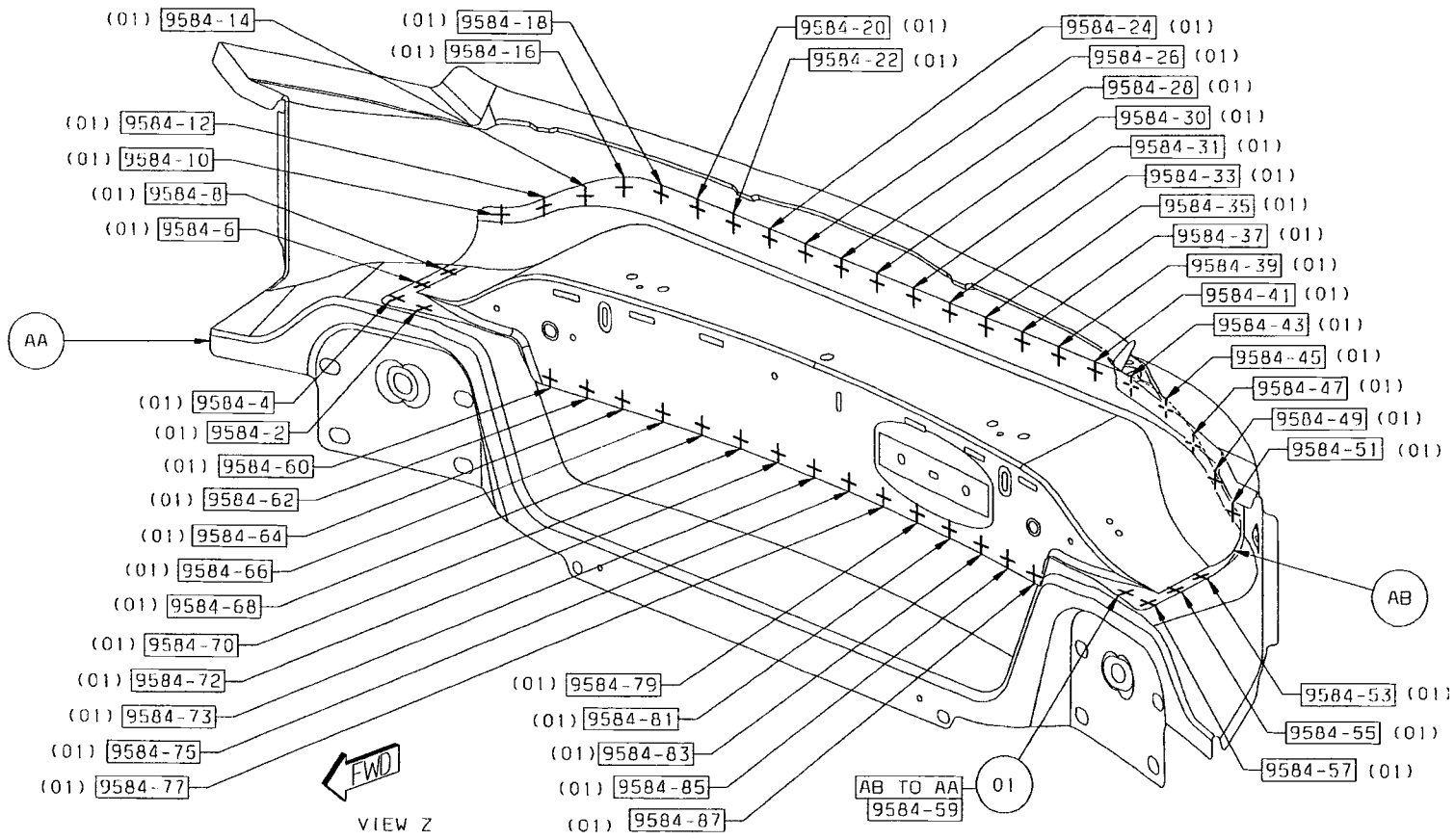

Back to Index

02 AC TO AA 17 S/WELDS (ORD)
03 AD TO AB 6 PROJ WELDS
04 AE TO AA 4 PROJ WELDS

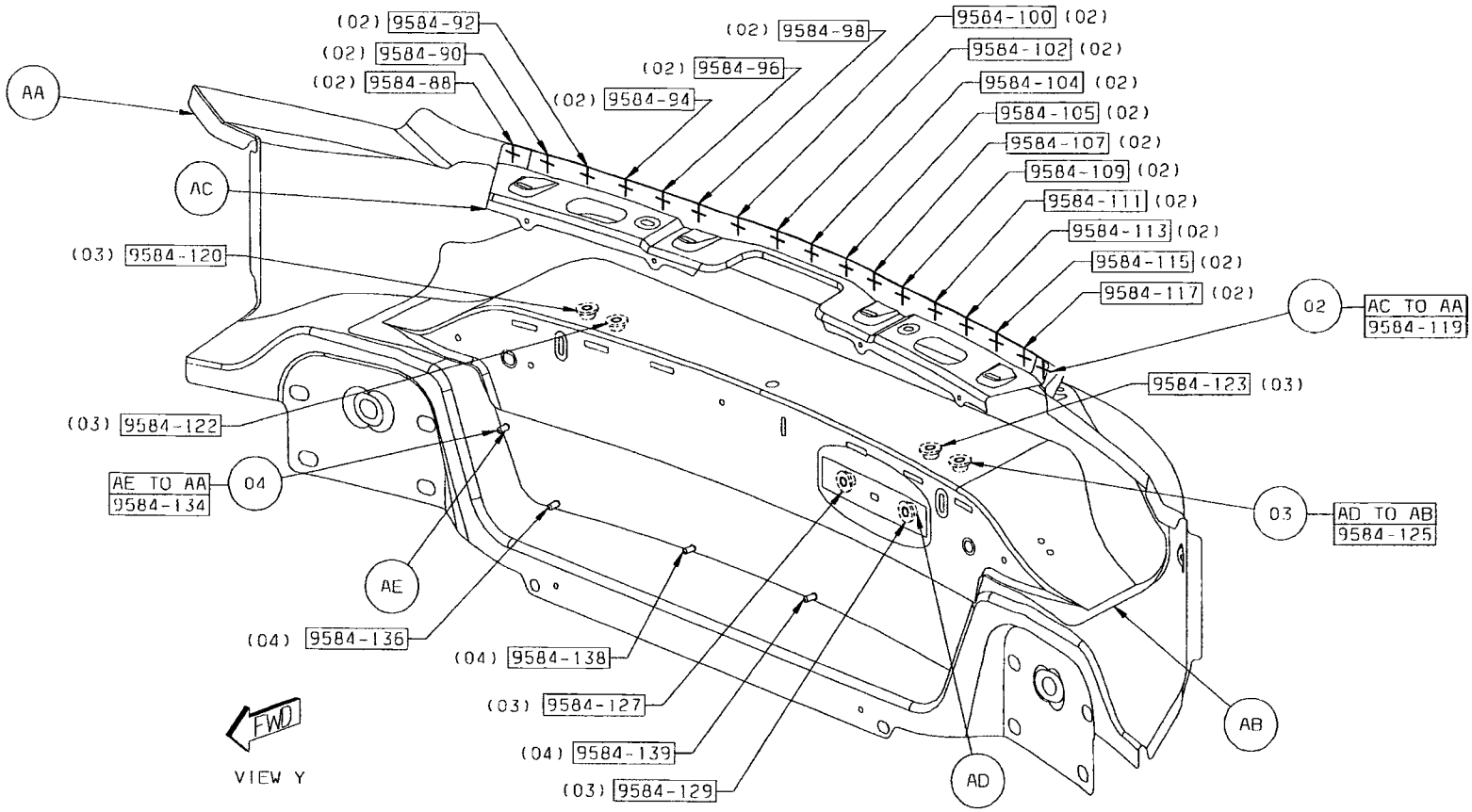

Back to Index

DODGE AVENGER REAR DOOR SECTION

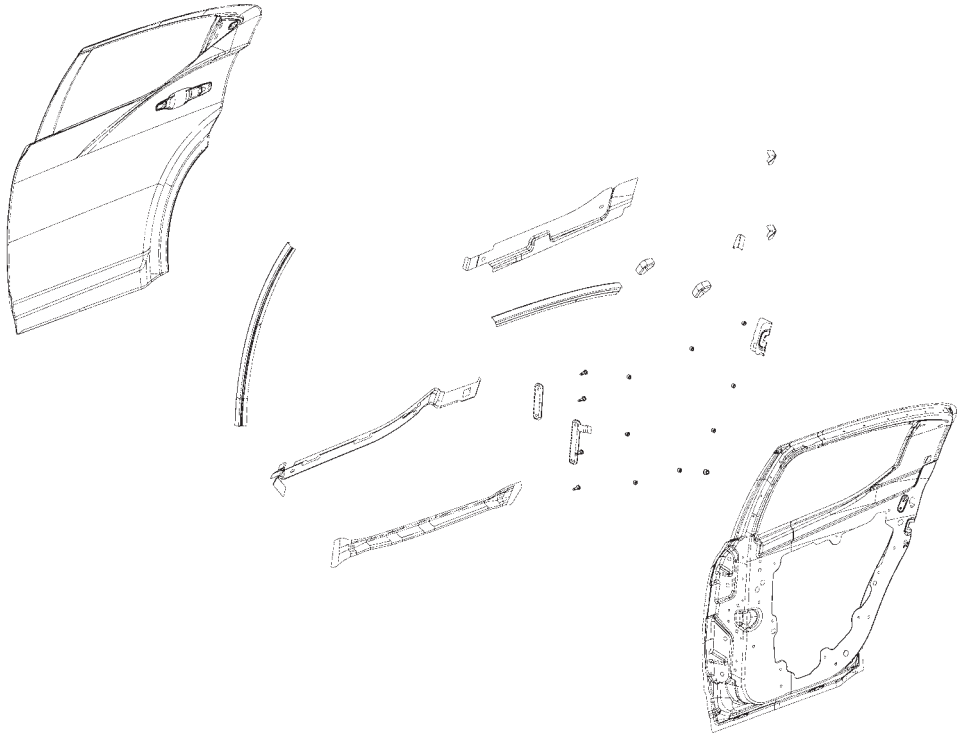

AA PANEL – RR DOOR INR RT –
AA PANEL – RR DOOR INR LT –
AB REINF – RR DOOR OUTSIDE PANEL BELT –
AB REINF – RR DOOR OUTSIDE PANEL BELT –
AC CHANNEL – GLASS RUN CHANNEL RR DOOR RT –
AC CHANNEL – GLASS RUN CHANNEL RR DOOR LT –
AD CHANNEL – GLASS RUN CHANNEL RR DOOR RT –
AD CHANNEL – GLASS RUN CHANNEL RR DOOR LT –
AE REINF – RR DOOR LATCH RT –
AE REINF – RR DOOR LATCH LT –
AF BRACKET – RR DOOR GLASS RUN LWR RT –
AF BRACKET – RR DOOR GLASS RUN LWR LT –
AG REINF – RR DOOR INR BELT RT –
AG REINF – RR DOOR INR BELT LT –
AH CHANNEL – GLASS RUN CHANNEL RR DOOR RT –
AH CHANNEL – GLASS RUN CHANNEL RR DOOR LT –
AJ STUD PLATE – DOOR HINGE –
AJ STUD PLATE – DOOR HINGE –
AK STUD PLATE – DOOR HINGE MTG STUD –
AK STUD PLATE – DOOR HINGE MTG STUD –
AL BEAM – IMPACT RR DOOR RT –
AL BEAM – IMPACT RR DOOR LT –
AM PANEL – RR DOOR OTR RT –
AM PANEL – RR DOOR OTR LT –
AN NUT/WELD.RD – NO.FIN.SPECIAL – RR DOOR HARDWARE MDLE TO DOOR INR

Back to Index

PARTS IDENTIFICATION LEGEND, OVERVIEW 44

AA PANEL – RR DOOR INR RT –
AA PANEL – RR DOOR INR LT –
AB REINF – RR DOOR OUTSIDE PANEL BELT –
AB REINF – RR DOOR OUTSIDE PANEL BELT –
AC CHANNEL – GLASS RUN CHANNEL RR DOOR RT –
AC CHANNEL – GLASS RUN CHANNEL RR DOOR LT –
AD CHANNEL – GLASS RUN CHANNEL RR DOOR RT –
AD CHANNEL – GLASS RUN CHANNEL RR DOOR LT –
AE REINF – RR DOOR LATCH RT –
AE REINF – RR DOOR LATCH LT –
AF BRACKET – RR DOOR GLASS RUN LWR RT –
AF BRACKET – RR DOOR GLASS RUN LWR LT –
AG REINF – RR DOOR INR BELT RT –
AG REINF – RR DOOR INR BELT LT –
AH CHANNEL – GLASS RUN CHANNEL RR DOOR RT –
AH CHANNEL – GLASS RUN CHANNEL RR DOOR LT –
AJ STUD PLATE – DOOR HINGE –
AJ STUD PLATE – DOOR HINGE –
AK STUD PLATE – DOOR HINGE MTG STUD –
AK STUD PLATE – DOOR HINGE MTG STUD –
AL BEAM – IMPACT RR DOOR RT –
AL BEAM – IMPACT RR DOOR LT –
AM PANEL – RR DOOR OTR RT –
AM PANEL – RR DOOR OTR LT –
AN NUT/WELD.RD – NO.FIN.SPECIAL – RR DOOR HARDWARE MDLE TO DOOR INR

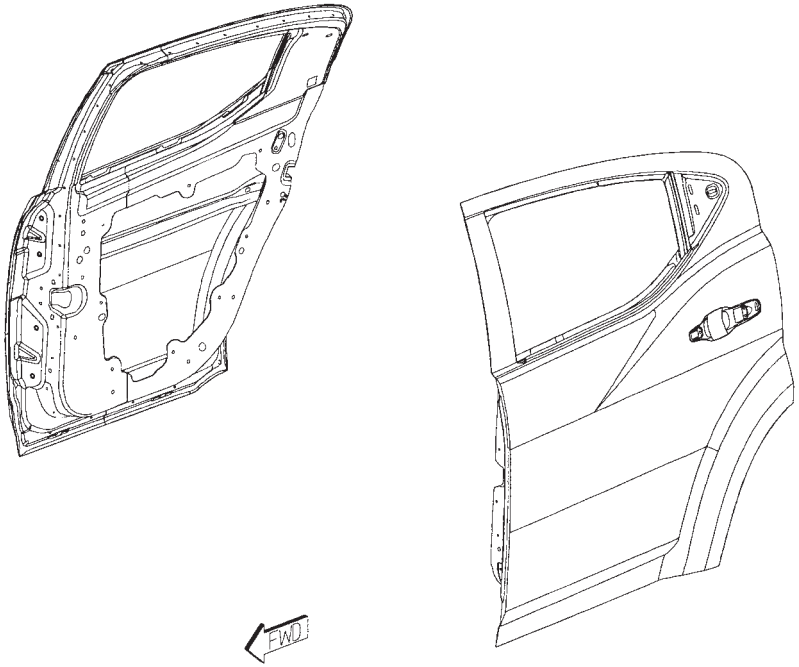

Back to Index

WELD LAYOUT LOCATION GUIDE

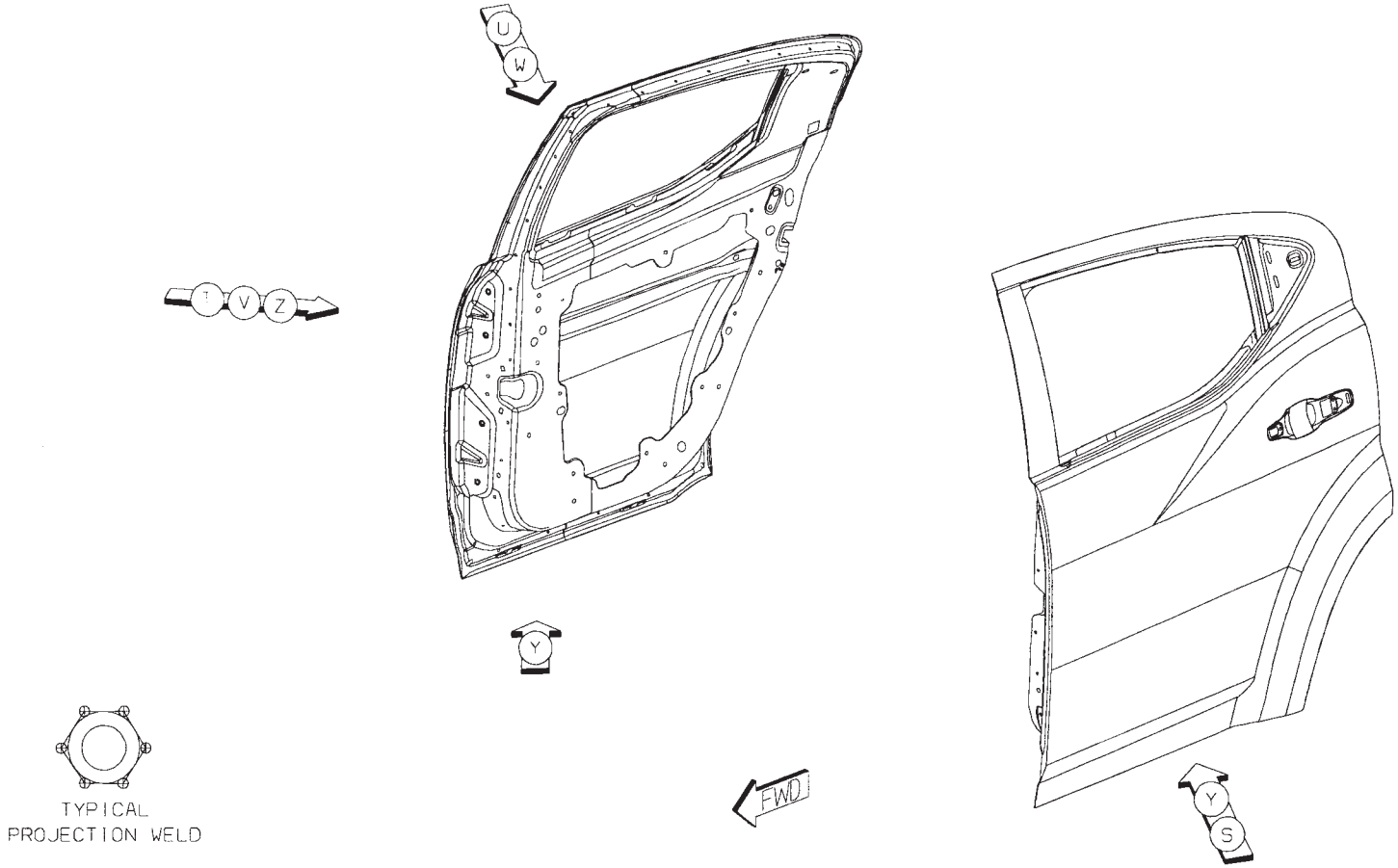

Back to Index

01 AE TO AA 6/SD S/WELDS (ORD)
02 AD TO AA 4/SD S/WELDS (ORD)
03 AC TO AA 8/SD S/WELDS (ORD)
04 AB TO AA 4R/3L S/WELDS (ORD)
05 AB TO AA 1L S/WELD (CRT)

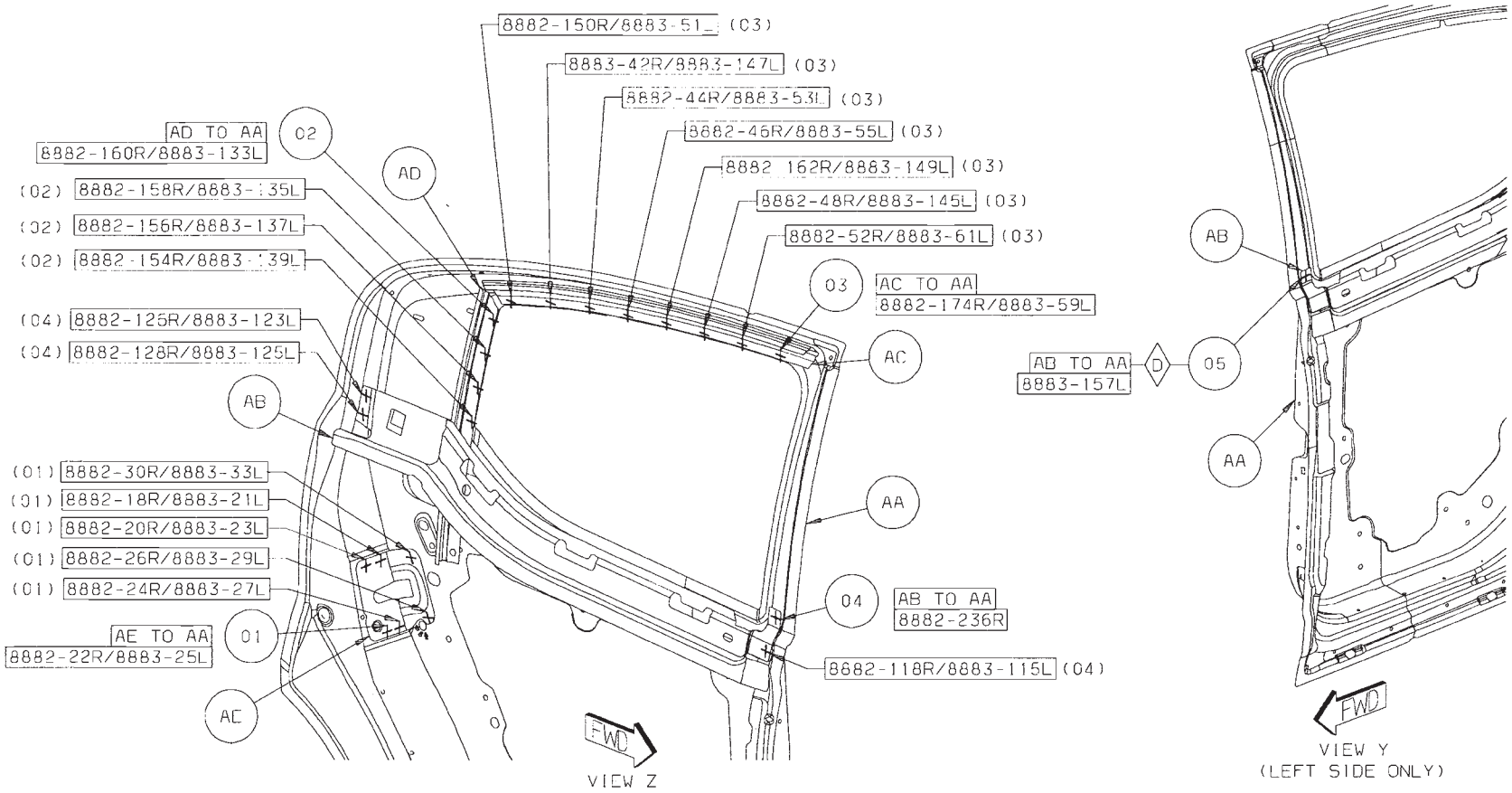

Back to Index

06 AF TO AA 1/SD S/WELDS (ORD)
07 AG TO AA 18/SD S/WELDS (ORD)

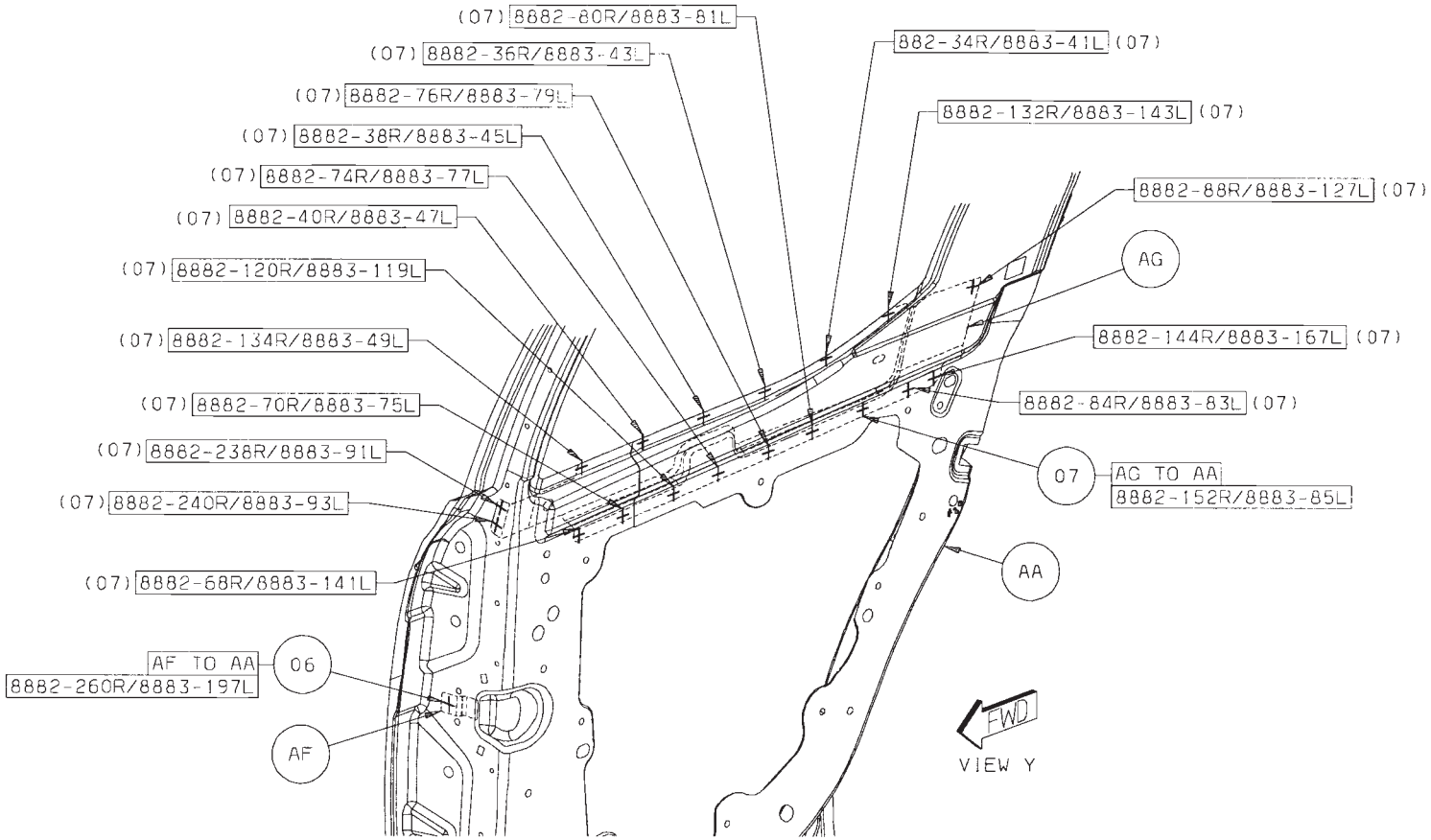

Back to Index

08 AL TO AA 8/SD S/WELDS (SAF)
09 AH TO AA 5/SD S/WELDS (ORD)
10 AJ TO AA 2/SD S/WELDS (ORD)
11 AK TO AA 2/SD S/WELDS (ORD)

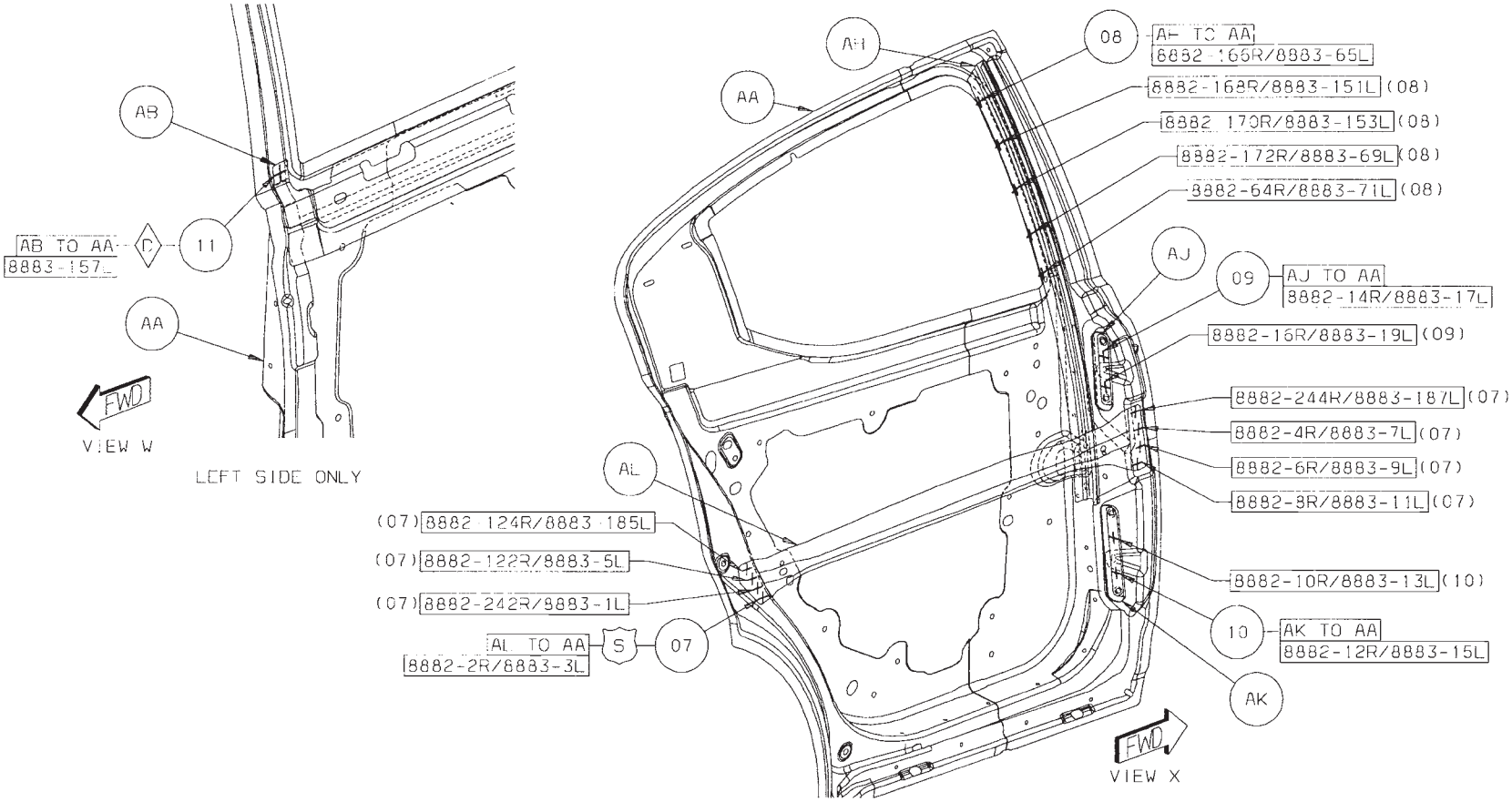

Back to Index

12 AN TO AA 8/SD PROJ WELDS

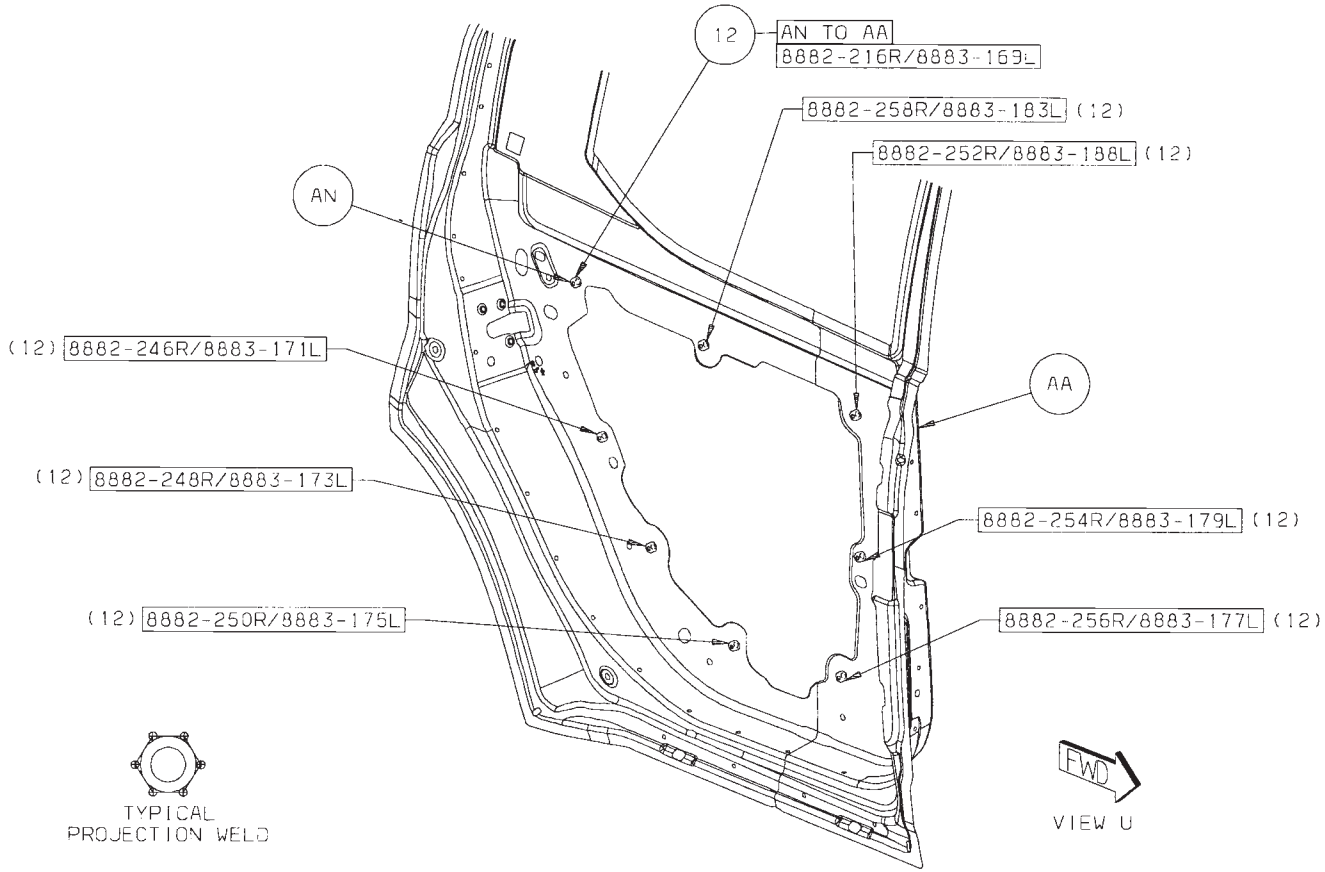

Back to Index

13 AB TO AM 2/SD STRUC ADH
14 AD TO AM 1/SD STRUC ADH
15 AC TO AM 1/SD STRUC ADH
16 AH TO AM 1/SD STRUC ADH
17 AM TO AA 7/SD STRUC ADH
18 AL TO AM 5/SD GUM DROP

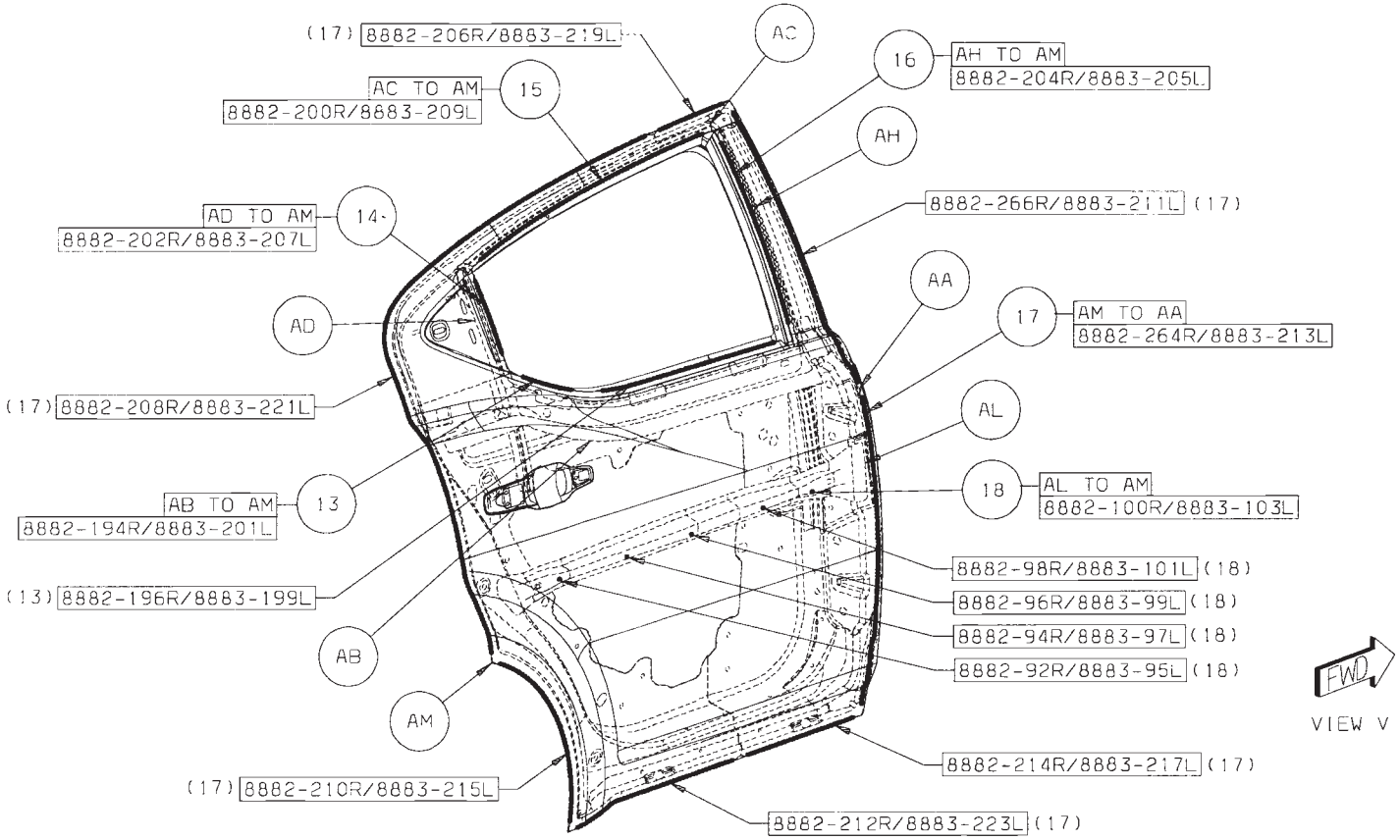

Back to Index

19 AB TO AM 8R STRUC ADH

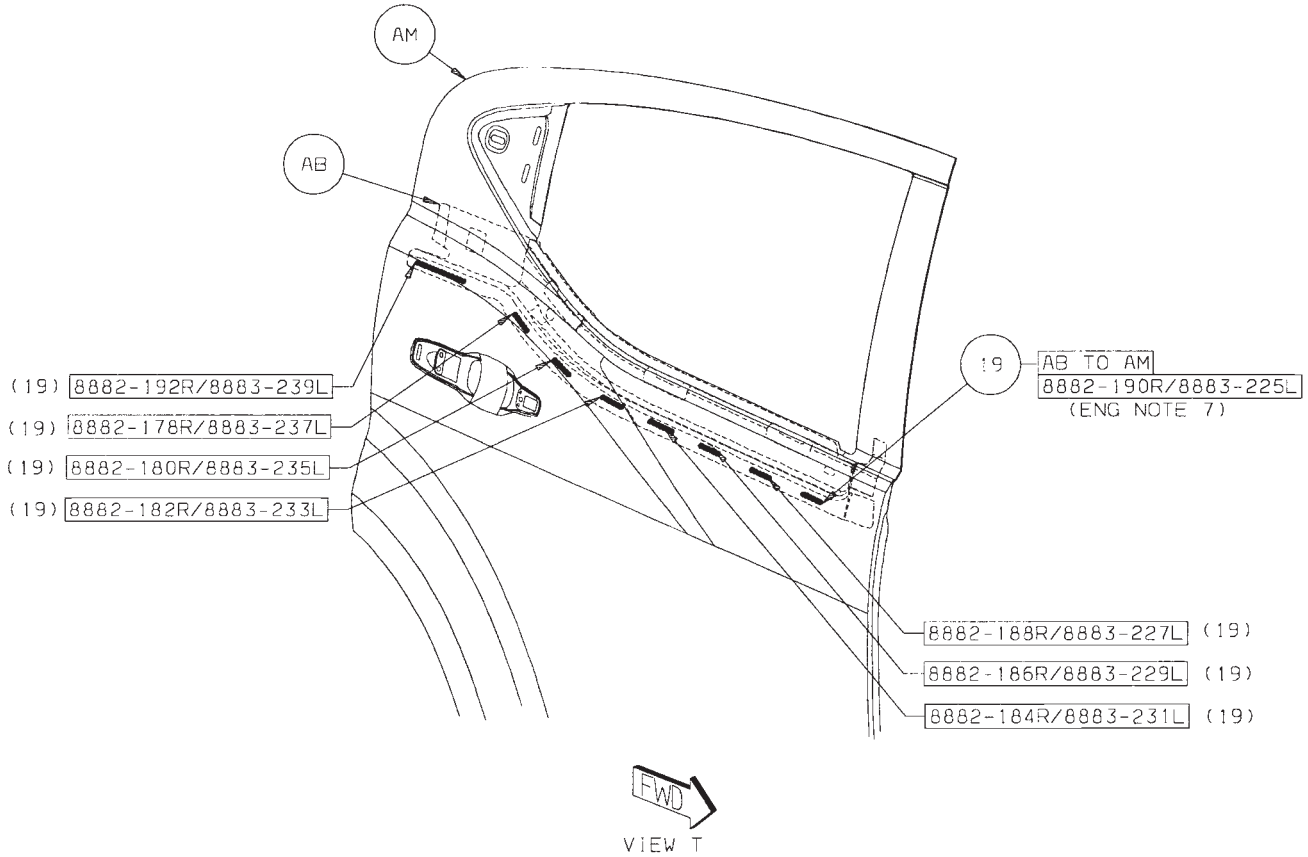

Back to Index

CHRYSLER SEBRING REAR DOOR SECTION

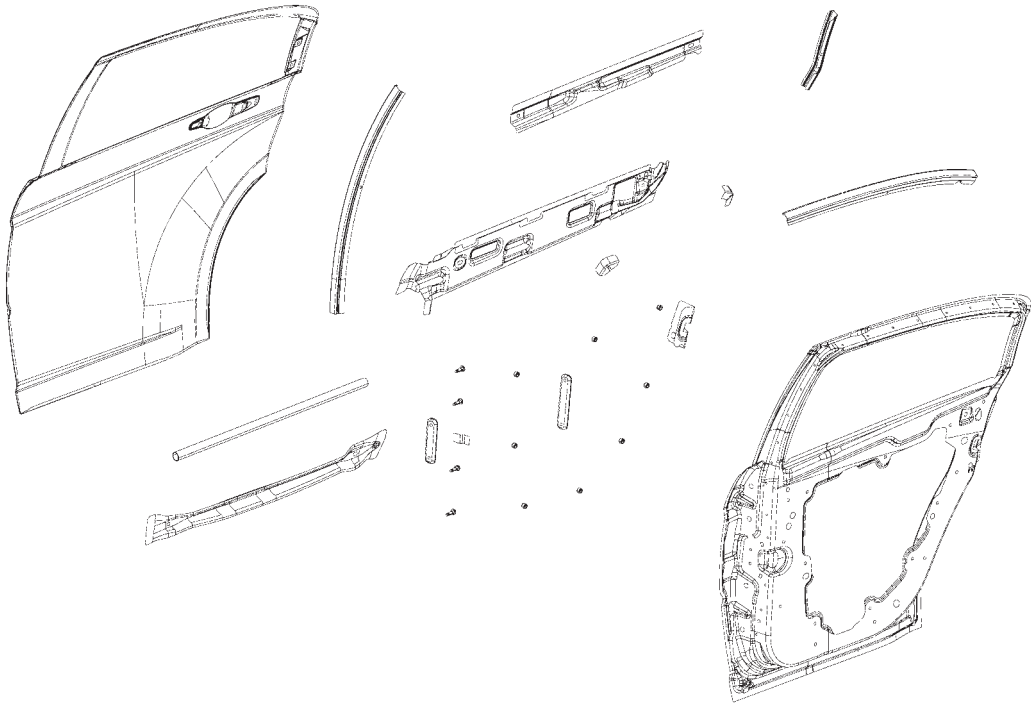

AA PANEL – RR DOOR INR RT –
AA PANEL – RR DOOR INR LT –
AB REINF – RR DOOR INR BELT RT – NONE
AB REINF – RR DOOR INR BELT LT – NONE
AC (2) 05160252 STUD PLATE ASSY – RR HINGE –
AD STUD PLATE – DOOR HINGE MTG STUD –
AD STUD PLATE – DOOR HINGE MTG STUD –
AE BEAM – RR DOOR IMPACT BAR FRT RT –
AE BEAM – RR DOOR IMPACT BAR FRT LT –
AF BRACKET – RR DOOR GLASS RUN LWR RT –
AF BRACKET – RR DOOR GLASS RUN LWR LT –
AG CHANNEL – GLASS RUN CHANNEL RR DOOR RT –
AG CHANNEL – GLASS RUN CHANNEL RR DOOR LT –
AH REINF – RR DOOR LATCH RT –
AH REINF – RR DOOR LATCH LT –
AJ CHANNEL – RR DOOR C-PILLAR RT –
AJ CHANNEL – RR DOOR C-PILLAR LT –
AK CHANNEL – RR DOOR HEADER RT –
AK CHANNEL – RR DOOR HEADER LT –
AL REINF – RR DOOR OTR BELT RT –
AL REINF – RR DOOR OTR BELT LT –
AM NUT/WELD.RD – NO.FIN.SPECIAL – RR DOOR TO DOOR INNER
AM NUT/WELD.RD – NO.FIN.SPECIAL – RR DOOR TO DOOR INNER
AN PANEL – RR DOOR OTR RT –
AN PANEL – RR DOOR OTR LT –

Back to Index

PARTS IDENTIFICATION LEGEND, OVERVIEW 43

AA PANEL – RR DOOR INR RT –
AA PANEL – RR DOOR INR LT –
AB REINF – RR DOOR INR BELT RT – NONE
AB REINF – RR DOOR INR BELT LT – NONE
AC (2) 05160252 STUD PLATE ASSY – RR HINGE –
AD STUD PLATE – DOOR HINGE MTG STUD –
AD STUD PLATE – DOOR HINGE MTG STUD –
AE BEAM – RR DOOR IMPACT BAR FRT RT –
AE BEAM – RR DOOR IMPACT BAR FRT LT –
AF BRACKET – RR DOOR GLASS RUN LWR RT –
AF BRACKET – RR DOOR GLASS RUN LWR LT –
AG CHANNEL – GLASS RUN CHANNEL RR DOOR RT –
AG CHANNEL – GLASS RUN CHANNEL RR DOOR LT –
AH REINF – RR DOOR LATCH RT –
AH REINF – RR DOOR LATCH LT –
AJ CHANNEL – RR DOOR C-PILLAR RT –
AJ CHANNEL – RR DOOR C-PILLAR LT –
AK CHANNEL – RR DOOR HEADER RT –
AK CHANNEL – RR DOOR HEADER LT –
AL REINF – RR DOOR OTR BELT RT –
AL REINF – RR DOOR OTR BELT LT –
AM NUT/WELD.RD – NO.FIN.SPECIAL – RR DOOR TO DOOR INNER
AM NUT/WELD.RD – NO.FIN.SPECIAL – RR DOOR TO DOOR INNER
AN PANEL – RR DOOR OTR RT –
AN PANEL – RR DOOR OTR LT –

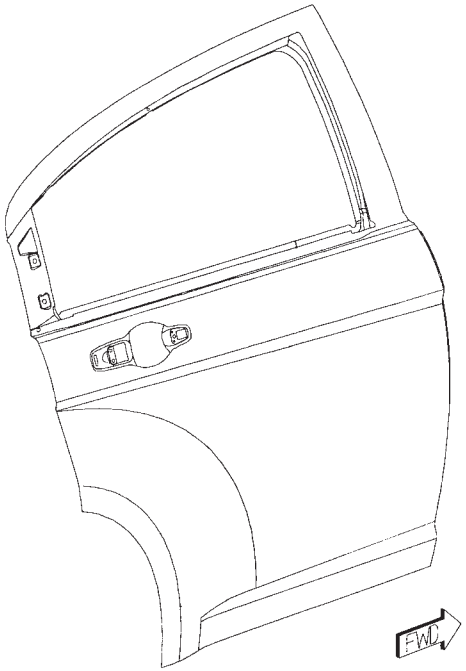

Back to Index

WELD LAYOUT LOCATION GUIDE

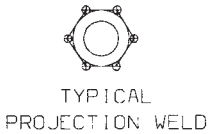

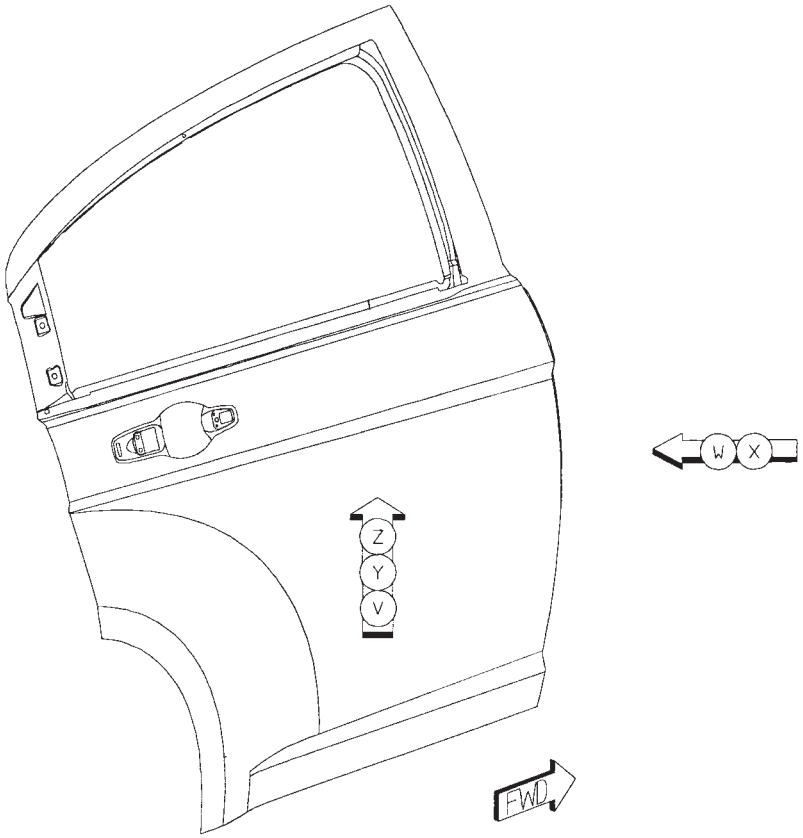

Back to Index

01 AE TO AA 8/SD S/WELDS (SAF)
02 AB TO AA 15/SD S/WELDS (ORD)
03 AC TO AA 2/SD S/WELDS (CRT)
04 AD TO AA 2/SD S/WELDS (CRT)

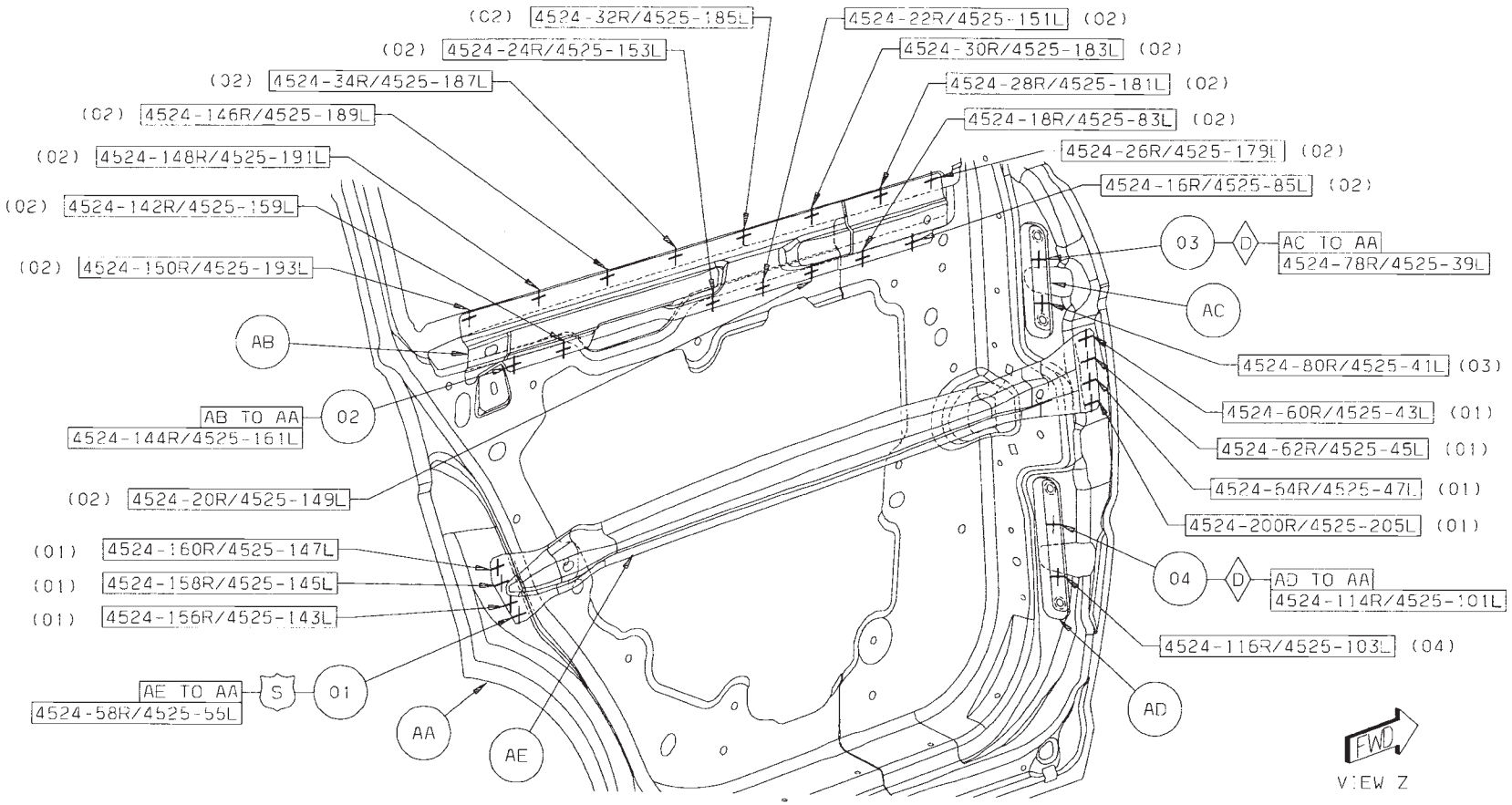

Back to Index

05 AF TO AA 1/SD S/WELDS (ORD)
06 AG TO AA 5/SD S/WELDS (ORD)
07 AJ TO AA 3/SD S/WELDS (ORD)
08 AK TO AA 10/SD S/WELDS (ORD)
09 AH TO AA 6/SD S/WELDS (CRT)

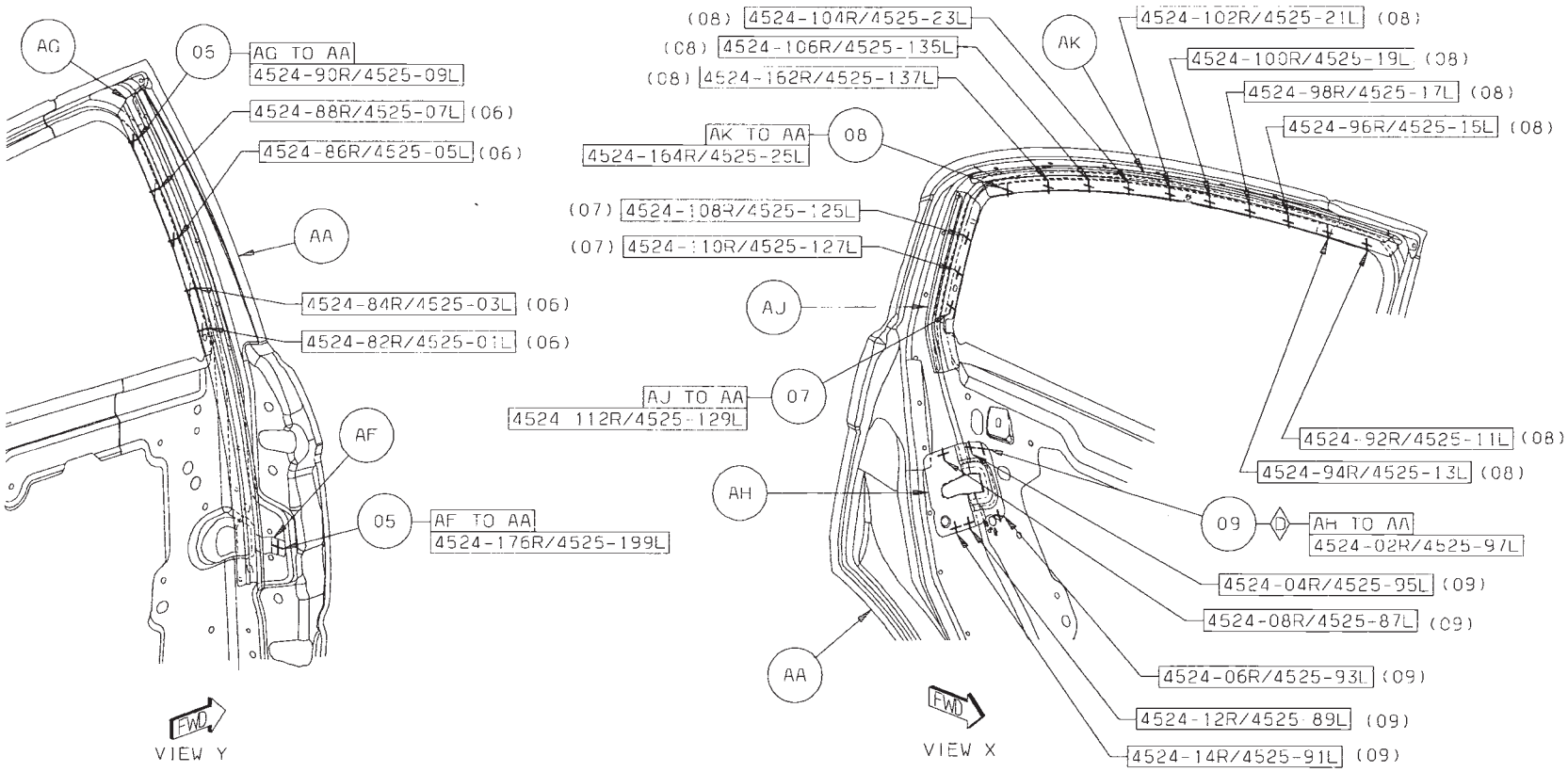

Back to Index

10 AM TO AA 8/SD PROJ WELDS
11 AL TO AA 6/SD S/WELDS (ORD)

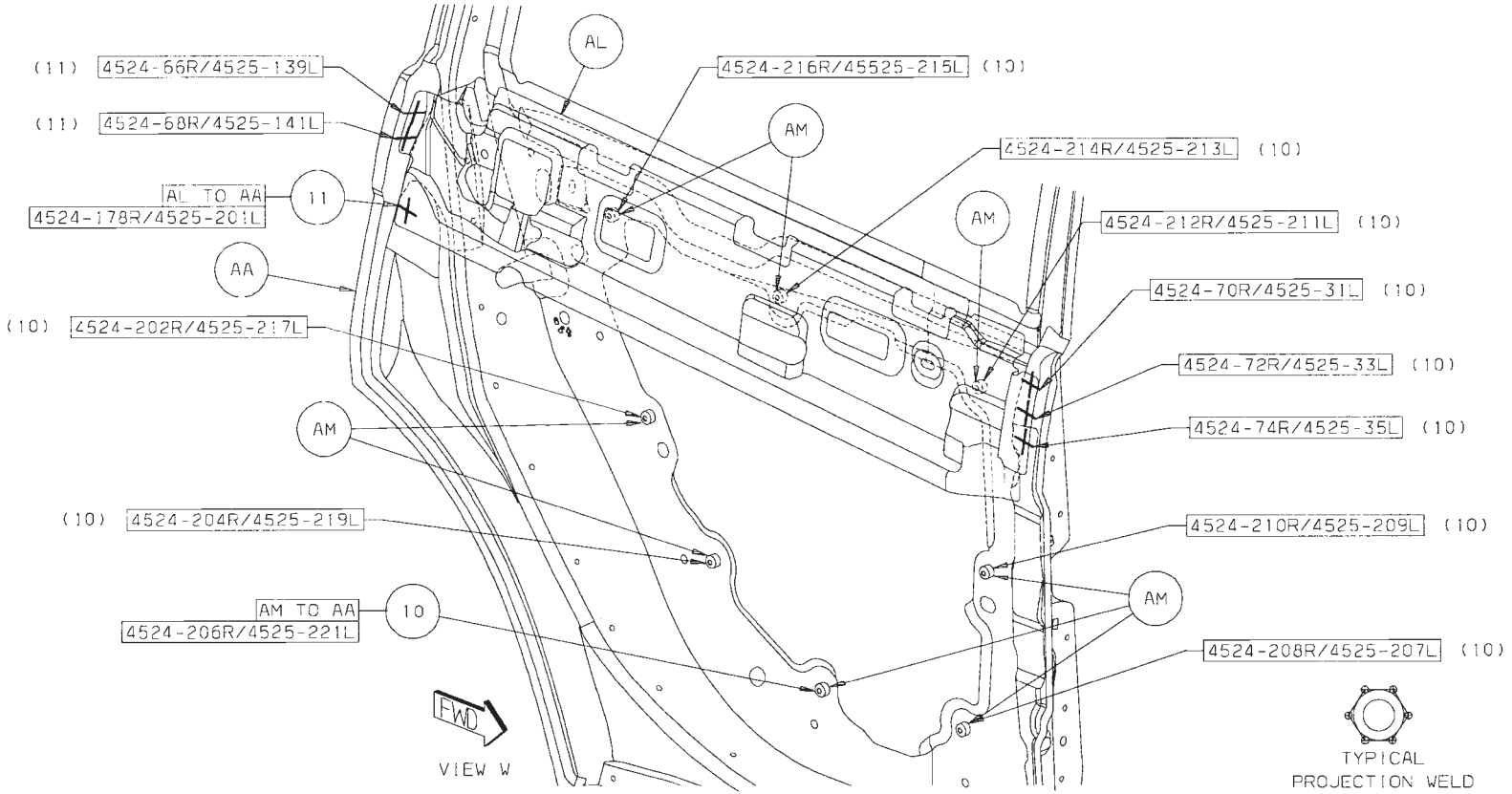

Back to Index

12 AN TO AA 1/SD STRUC ADH
13 AN TO AE 4/SD STRUC ADH
14 AN TO AL 5/SD STRUC ADH
15 AN TO AJ 1/SD STRUC ADH
16 AN TO AK 1/SD STRUC ADH
17 AN TO AA 1/SD STRUC ADH
18 AN TO AL 1/SD STRUC ADH
19 AN TO AL 1/SD STRUC ADH

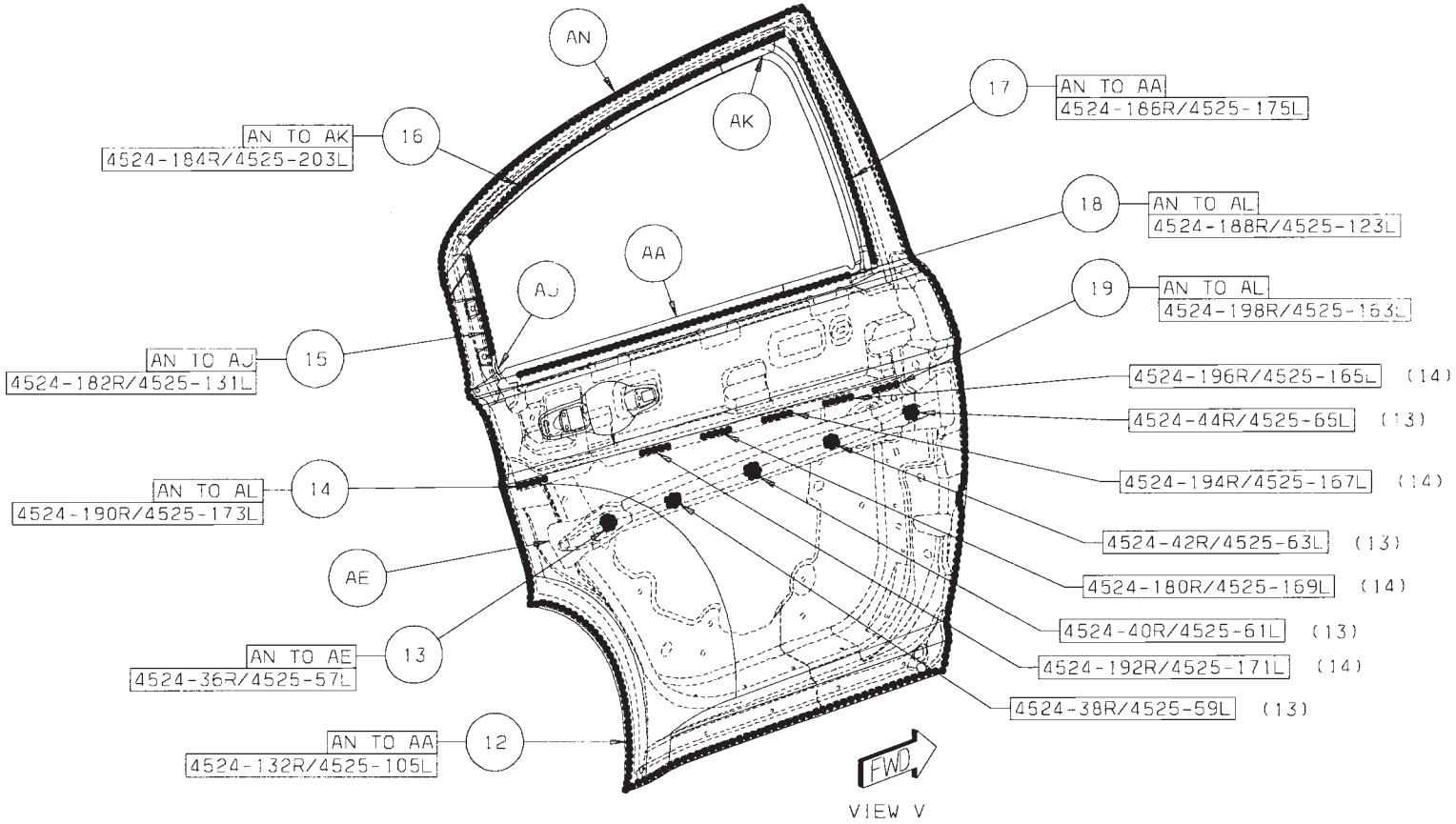

Back to Index

CHRYSLER SEBRING REAR FLOOR SECTION

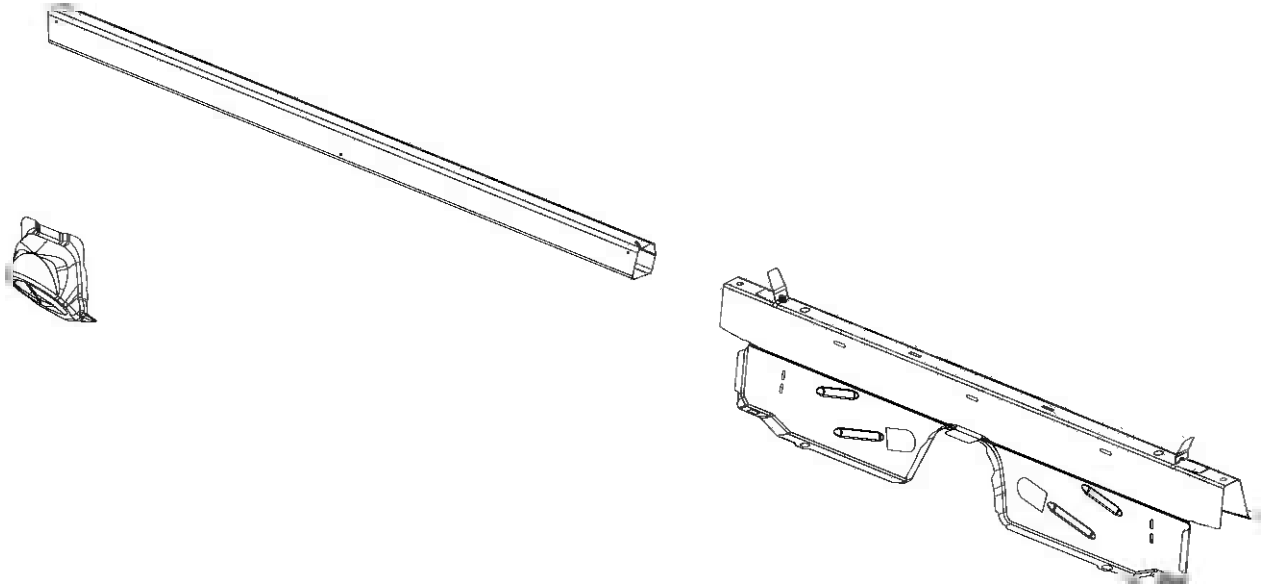

AA BEAM – REINF –
AB BRACKET – RR SEAT CUSHION ATTACHING –
AC EXTENSION – RR FLOOR –

Back to Index

PARTS IDENTIFICATION LEGEND, OVERVIEW 7

AA BEAM – REINF –
AB BRACKET – RR SEAT CUSHION ATTACHING –
AC EXTENSION – RR FLOOR –

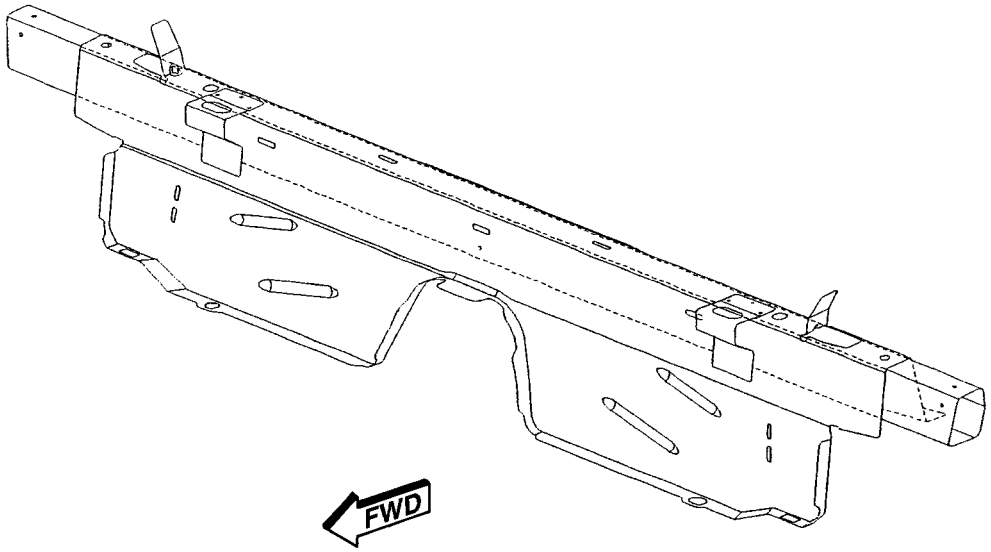

Back to Index

WELD LAYOUT LOCATION GUIDE

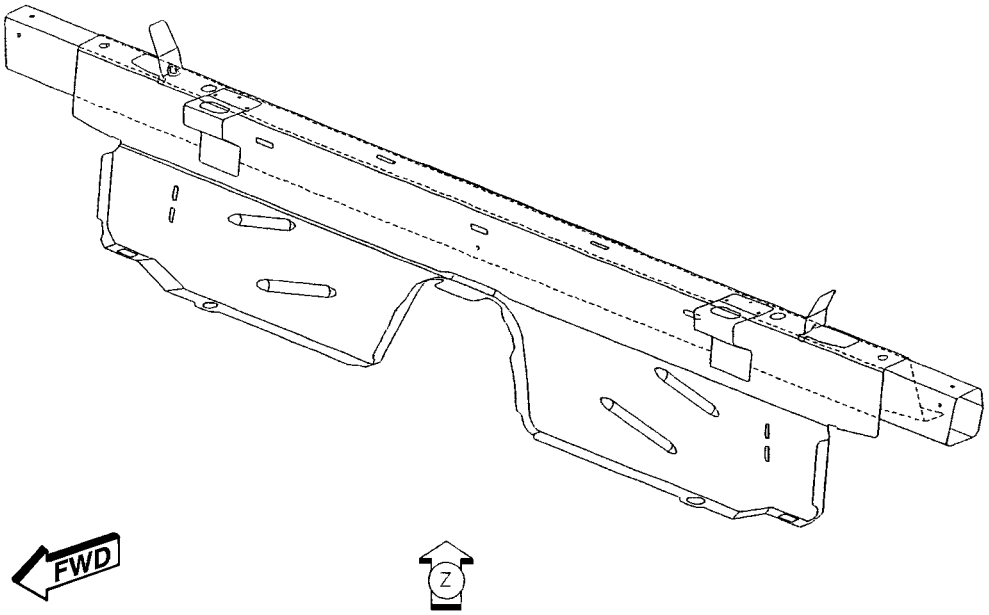

Back to Index

01 AC TO AB 4 FCAW (ORD)
02 AC TO AA 5 FCAW (ORD)

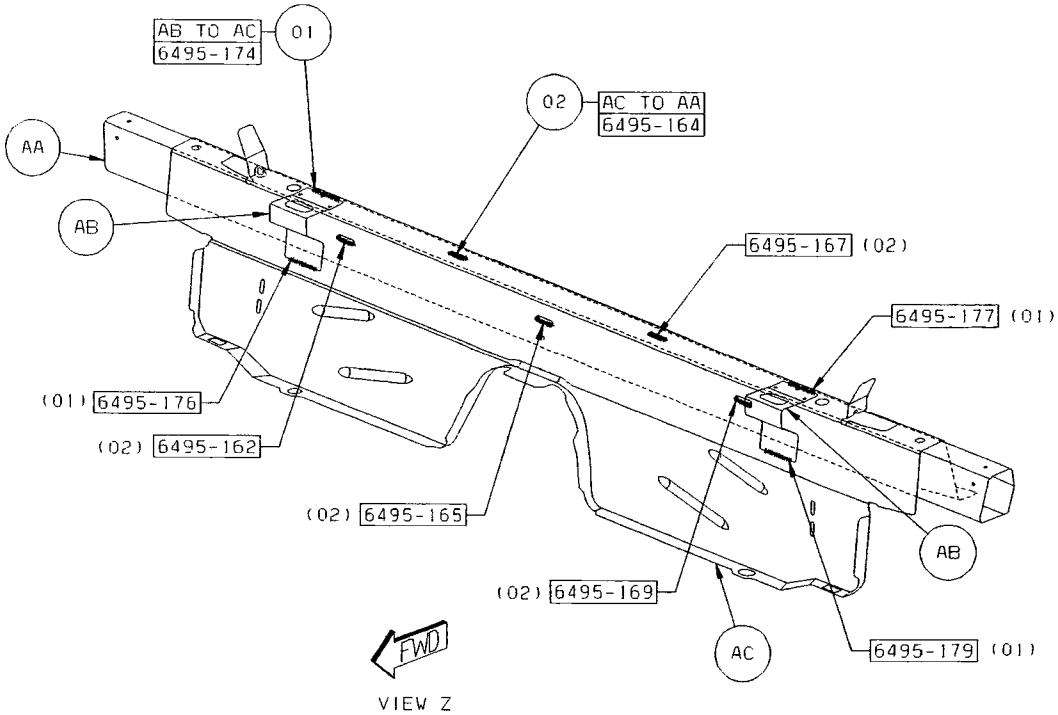

Back to Index

CHRYSLER SEBRING REAR FLOOR COMPLETE SECTION

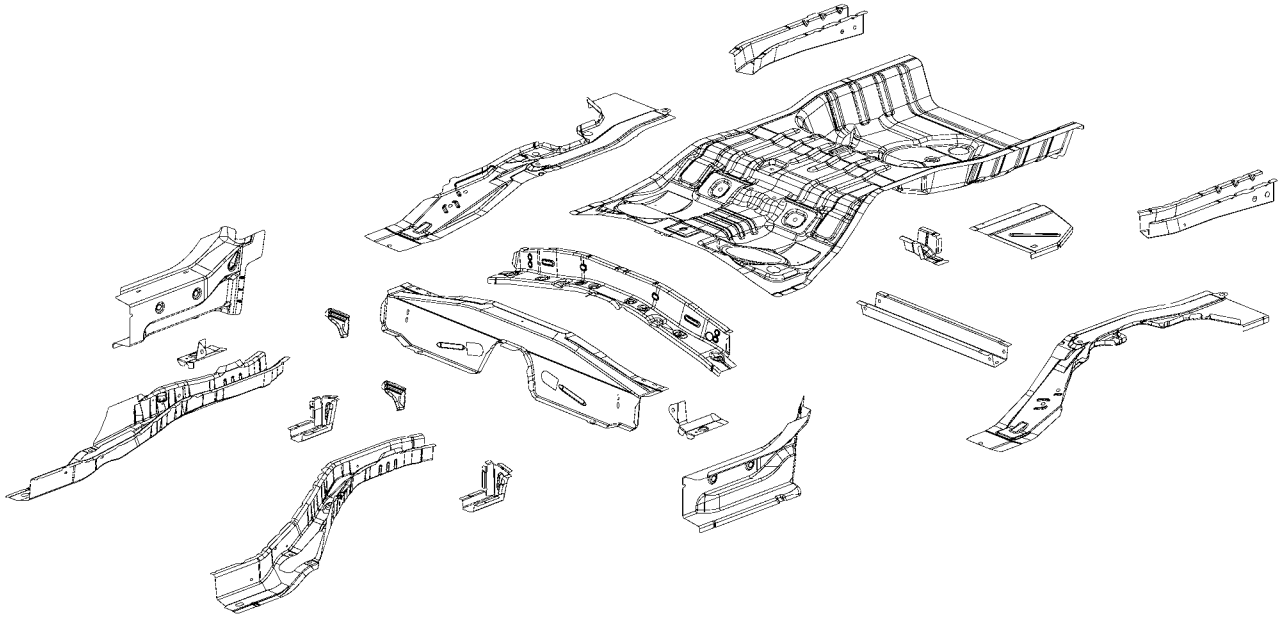

AA SIDEMEMBER - RR FLOOR UPR RT -
AB PAN - RR FLOOR PAN -
AC SIDEMEMBER - RR FLOOR LWR RT -
AC SIDEMEMBER - RR FLOOR LWR LT -
AD EXTENSION - RR FLOOR CROSSMEMBER FRT RT -
AD EXTENSION - RR FLOOR CROSSMEMBER FRT LT -
AE CROSSMEMBER - RR FLOOR FRT -
AF EXTENSION - RR FLOOR SIDEMEMBER RT -
AF EXTENSION - RR FLOOR SIDEMEMBER LT -
AG EXTENSION - RR FLOOR SIDEMEMBER RT -
AG EXTENSION - RR FLOOR SIDEMEMBER LT -
AH STUD.WELD/EXTERNAL -
HEADER.PT.PNT.CUTTER.SPECIAL - QTR INR REINF BRKT TO RR RAIL ASSY
AJ EXTENSION - RR FLOOR -
AK CROSSMEMBER - RR SEAT -
AL EXTENSION - SIDEMEMBER FRT FLOOR RT -
AM SILL - RR FLOOR SIDEMEMBER RT -
AM SILL - RR FLOOR SIDEMEMBER LT -
AN EXTENSION - RR FLOOR SIDEMEMBER RT -
AN EXTENSION - RR FLOOR SIDEMEMBER LT -
AP BULKHEAD - RR FLOOR SIDEMEMBER RT -
AP BULKHEAD - RR FLOOR SIDEMEMBER LT -

Back to Index

PARTS IDENTIFICATION LEGEND, OVERVIEW 21

AA SIDEMEMBER - RR FLOOR UPR RT -
AB PAN - RR FLOOR PAN -
AC SIDEMEMBER - RR FLOOR LWR RT -
AC SIDEMEMBER - RR FLOOR LWR LT -
AD EXTENSION - RR FLOOR CROSSMEMBER FRT RT -
AD EXTENSION - RR FLOOR CROSSMEMBER FRT LT -
AE CROSSMEMBER - RR FLOOR FRT -
AF EXTENSION - RR FLOOR SIDEMEMBER RT -
AF EXTENSION - RR FLOOR SIDEMEMBER LT -
AG EXTENSION - RR FLOOR SIDEMEMBER RT -
AG EXTENSION - RR FLOOR SIDEMEMBER LT -
AH STUD.WELD/EXTERNAL -
HEADER.PT.PNT.CUTTER.SPECIAL - QTR INR REINF BRKT TO RR FAIL ASSY
AJ EXTENSION - RR FLOOR -
AK CROSSMEMBER - RR SEAT -
AL EXTENSION - SIDEMEMBER FRT FLOOR RT -
AM SILL - RR FLOOR SIDEMEMBER RT -
AM SILL - RR FLOOR SIDEMEMBER LT -
AN EXTENSION - RR FLOOR SIDEMEMBER RT -
AN EXTENSION - RR FLOOR SIDEMEMBER LT -
AP BULKHEAD - RR FLOOR SIDEMEMBER RT -
AP BULKHEAD - RR FLOOR SIDEMEMBER LT -

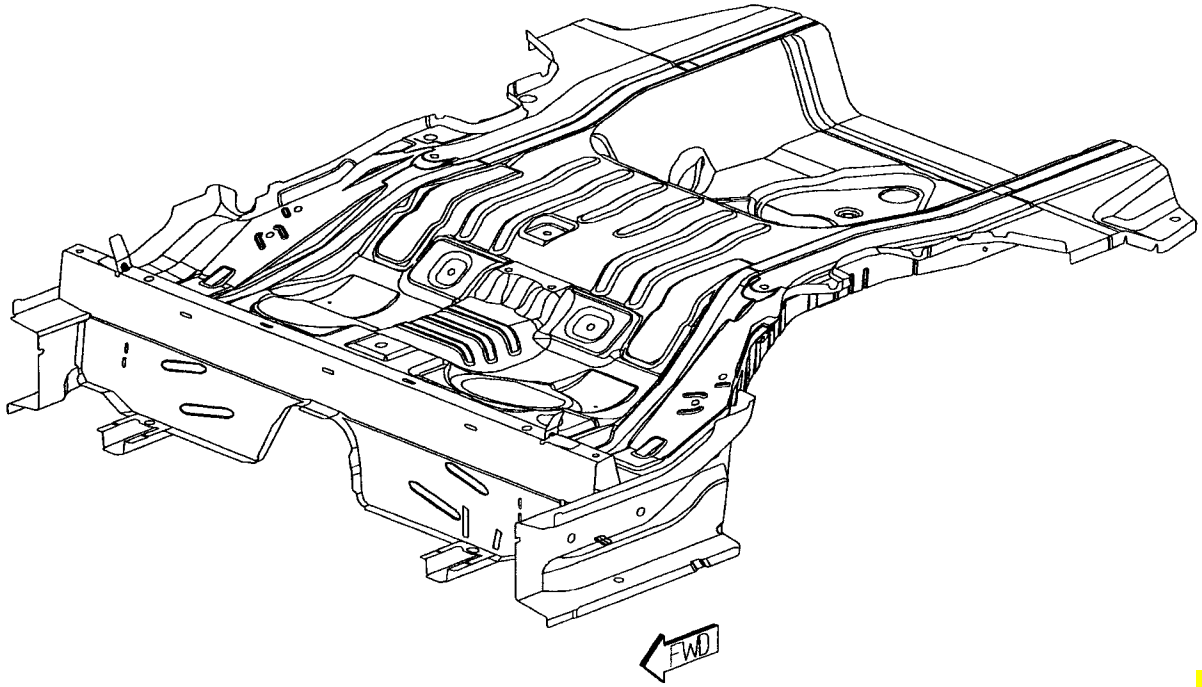

Back to Index

WELD LAYOUT LOCATION GUIDE

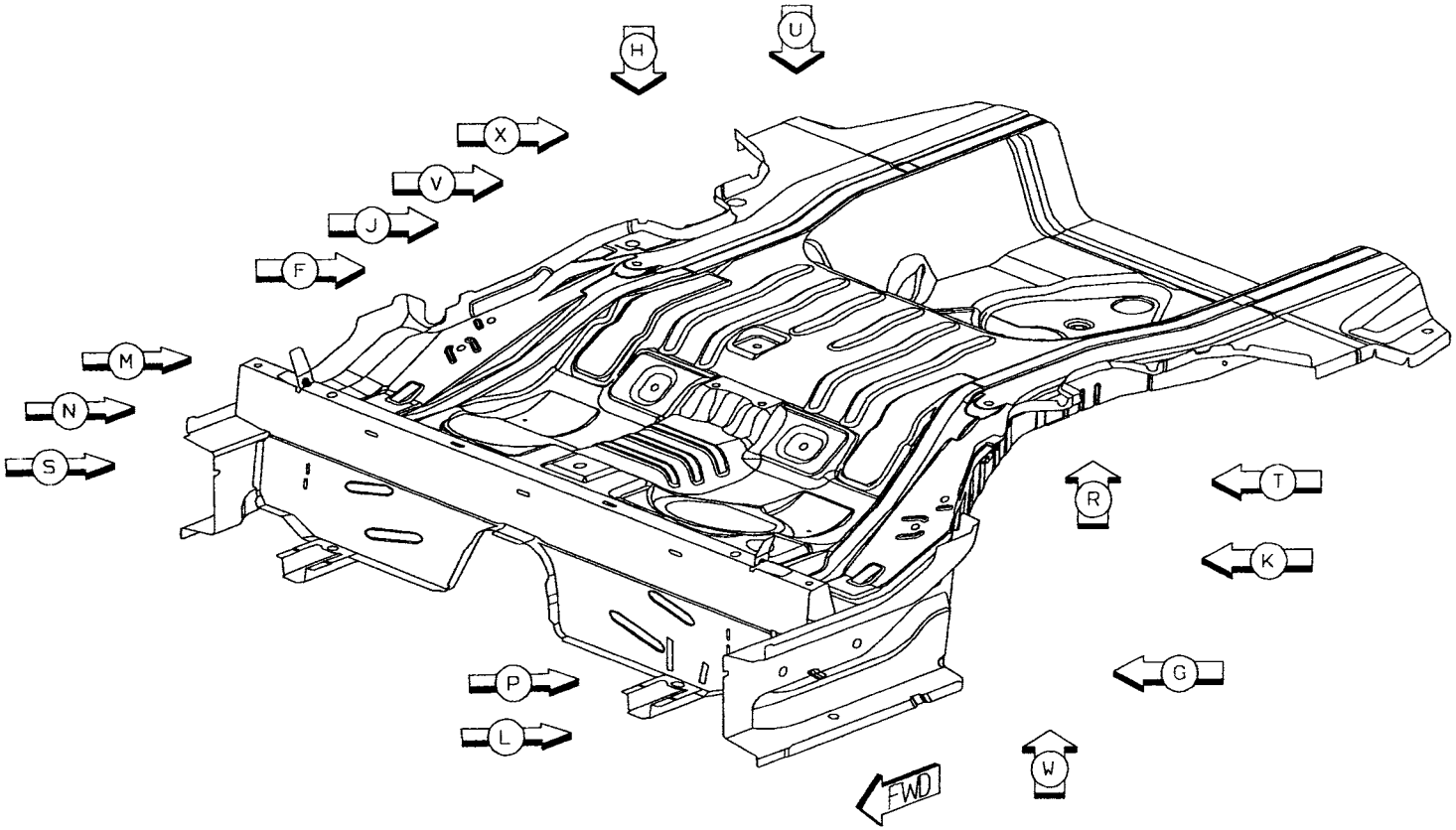

Back to Index

01 AC TO AB TO AA 5R S/WELDS (ORD)
02 AB TO AA 16R S/WELDS (ORD)

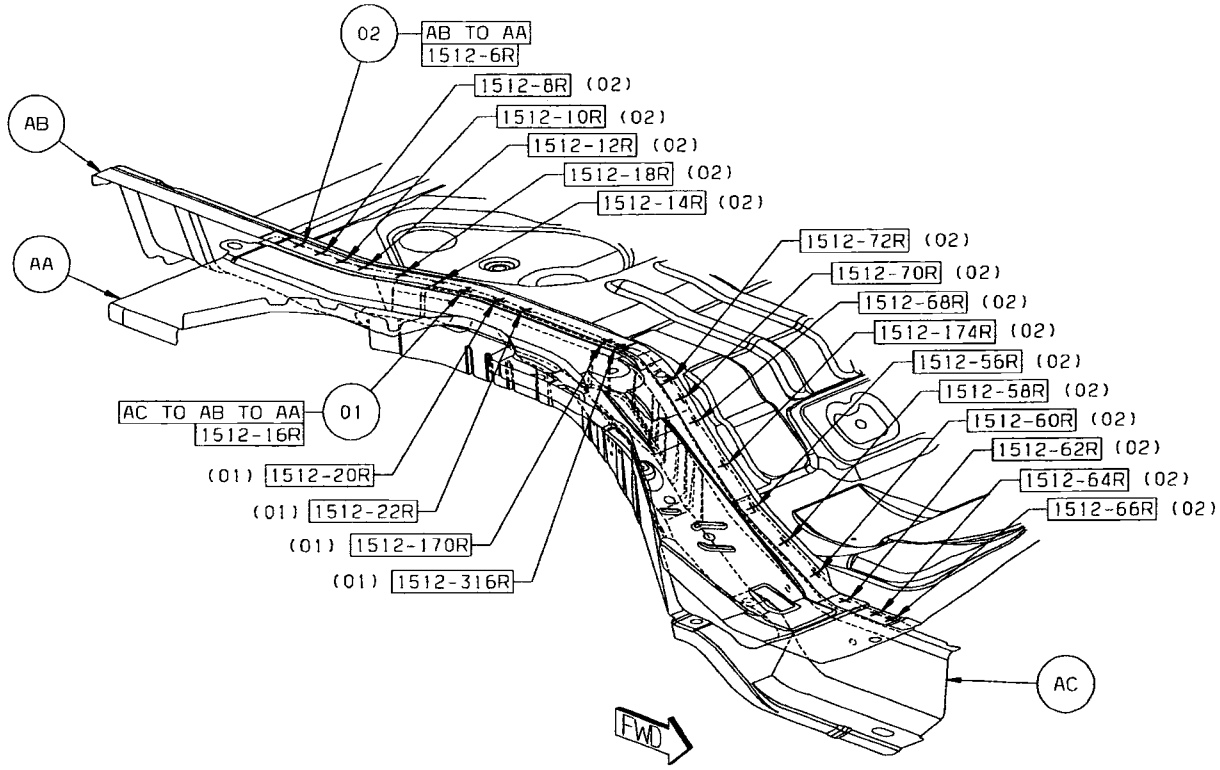

VIEW Z
(RIGHT SIDE ONLY)

Back to Index

03 AC TO AB TO AA 5L S/WELDS (ORD)
04 AB TO AA 16L S/WELDS (ORD)

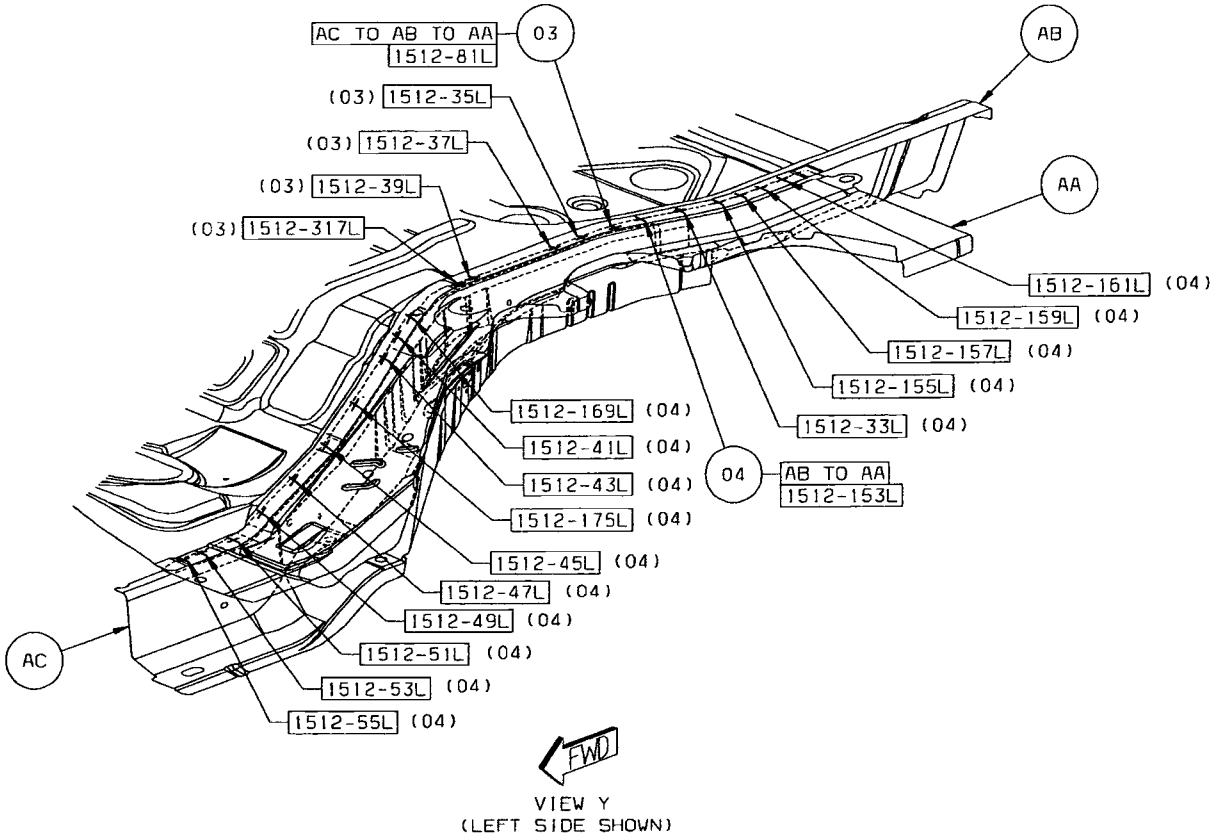

Back to Index

05 AE TO AD TO AB 4/SD S/WELDS (ORD)
06 AE TO AB 28 S/WELDS (ORD)

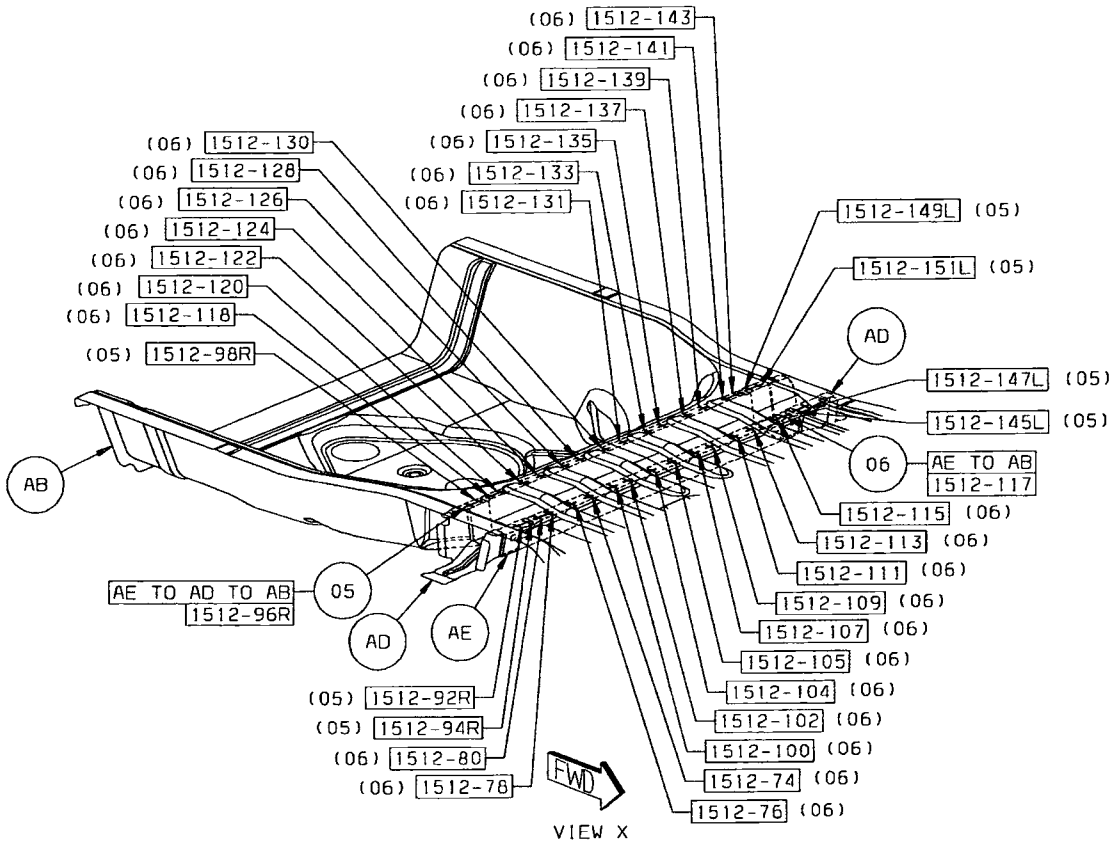

Back to Index

07 AB TO AF 2/SD S/WELDS (ORD)
08 AH TO AB 1 PROJ WELD (ORD)
09 AG TO AF TO AB 7/SD S/WELDS (ORD)

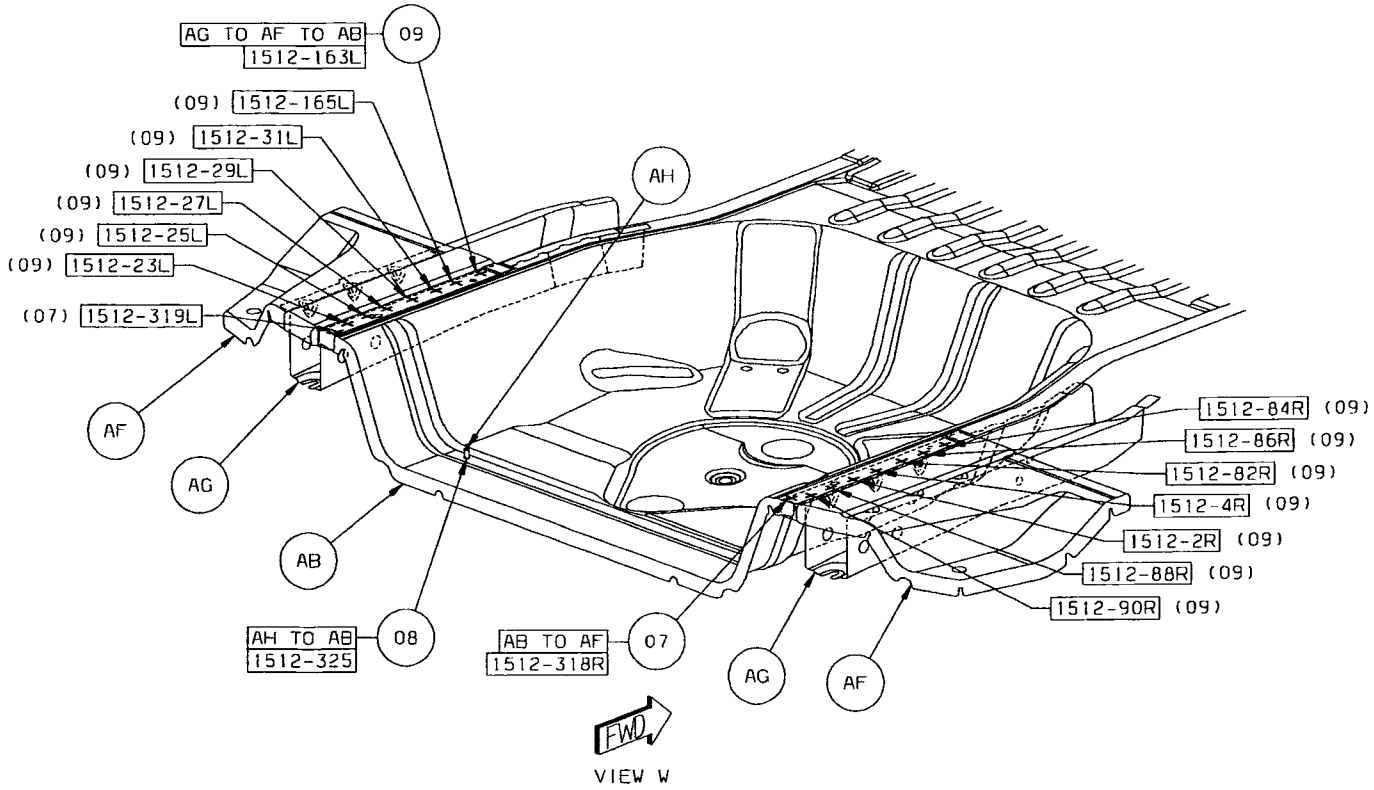

Back to Index

10 AK TO AJ TO AB 19 S/WELDS (ORD)

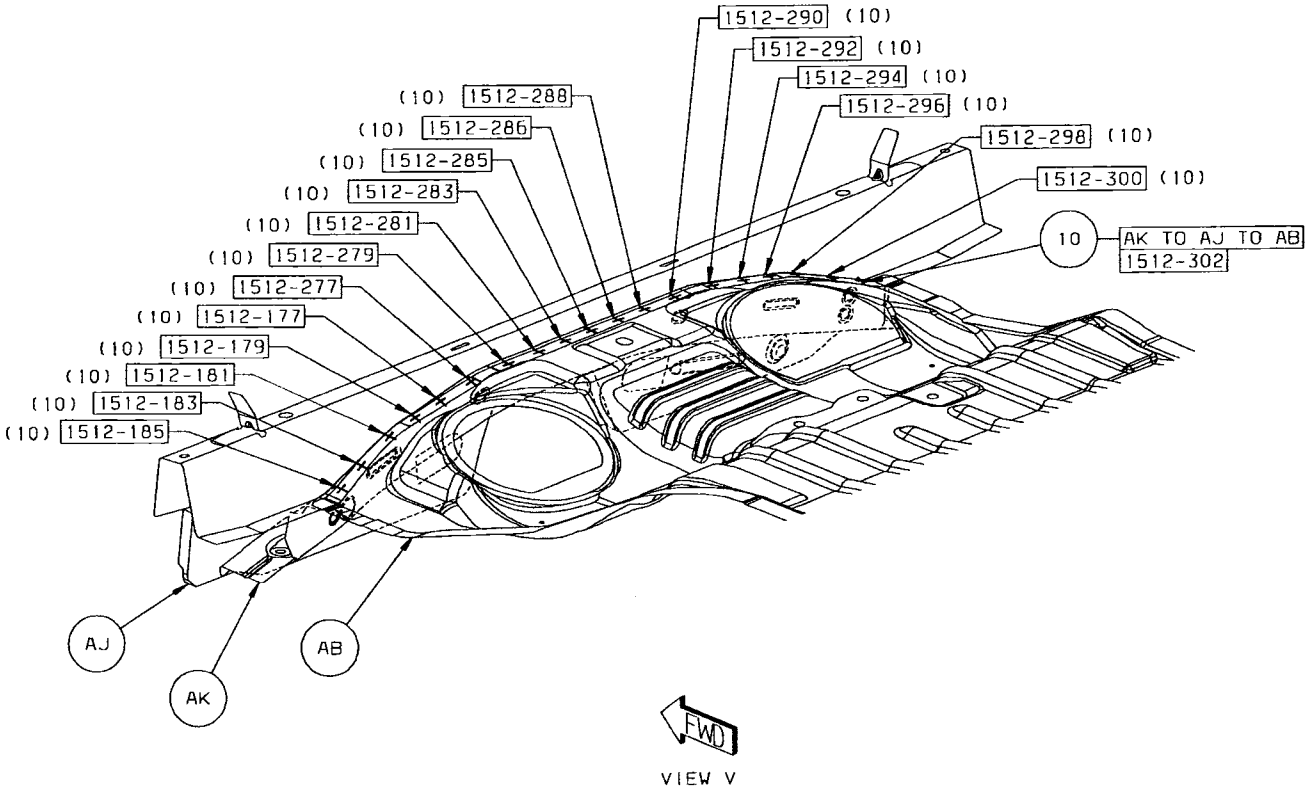

Back to Index

11 AK TO AJ 21 S/WELDS (ORD)

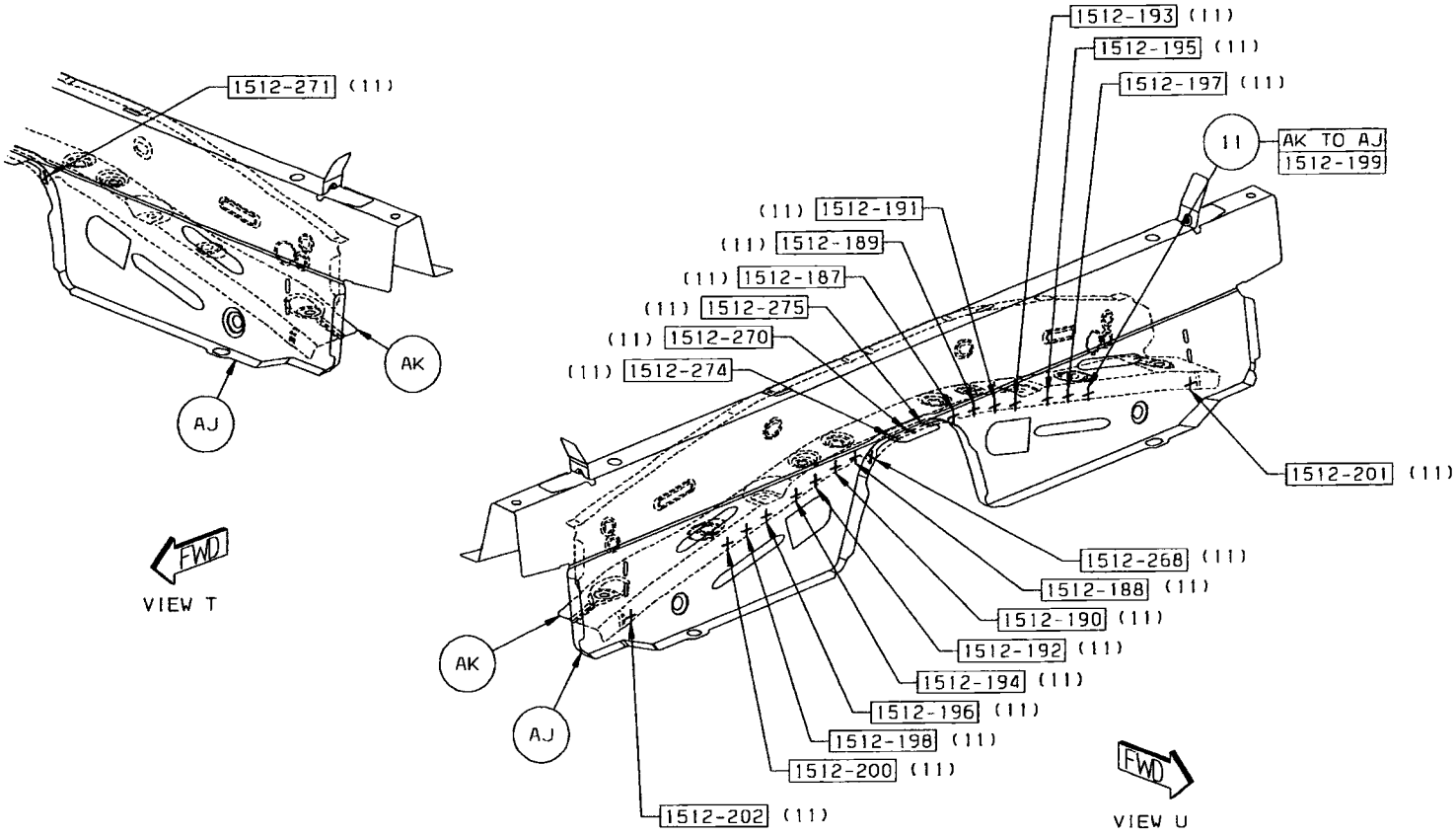

Back to Index

12 AL TO AK TO AJ 2/SD S/WELDS (ORD)
13 AL TO AJ 4/SD S/WELDS (ORD)

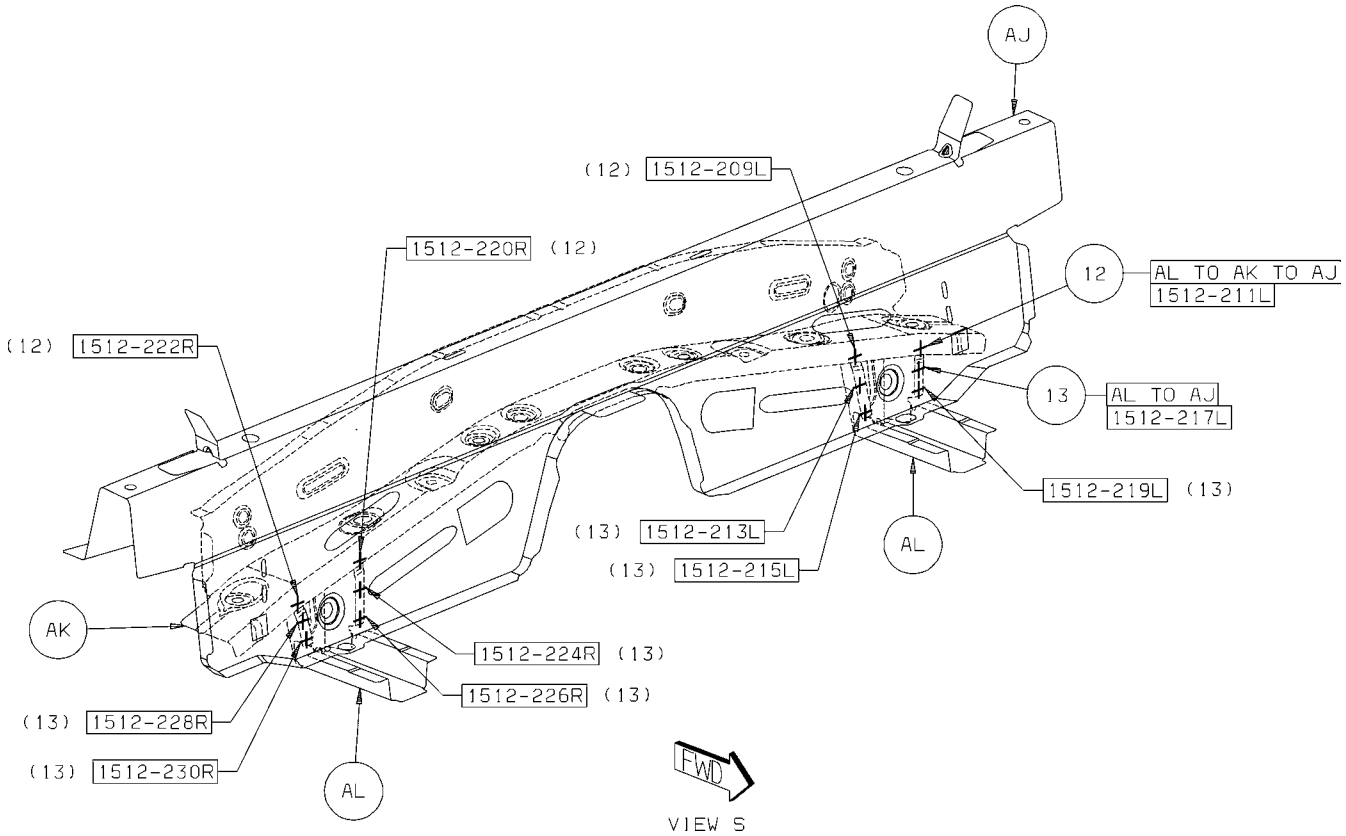

Back to Index

14 AN TO AK 2/SD FCAW (ORD)
15 AN TO AK TO AJ 1/SD S/WELD (ORD)
16 AN TO AK 1/SD S/WELD (ORD)
17 AM TO AJ 2/SD S/WELDS (ORD)

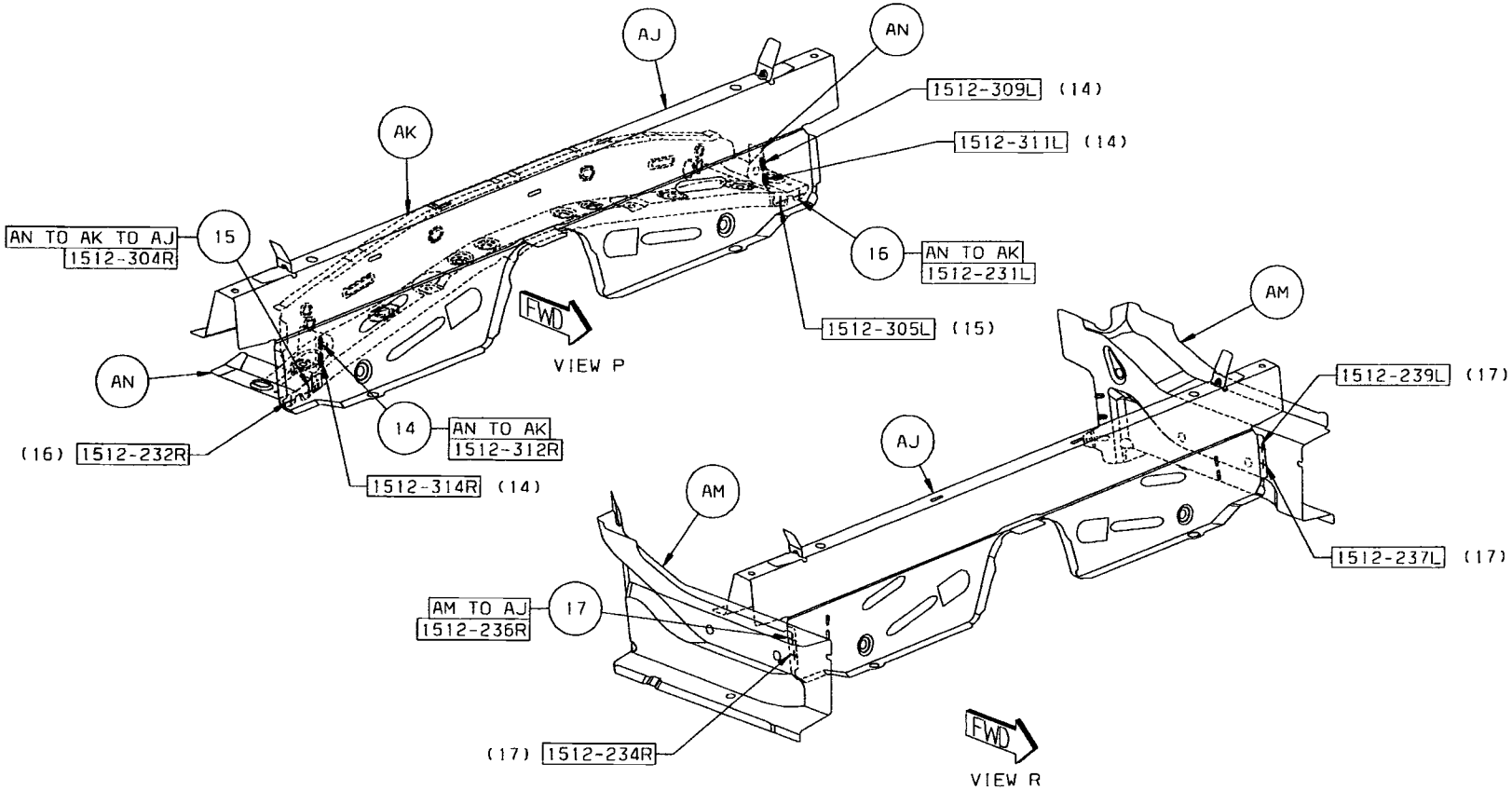

Back to Index

18 AN TO AK TO AC 2/SD S/WELDS (ORD)
19 AK TO AC TO AA 1/SD S/WELD (ORD)
20 AP TO AK TO AC 2/SD S/WELDS (ORD)

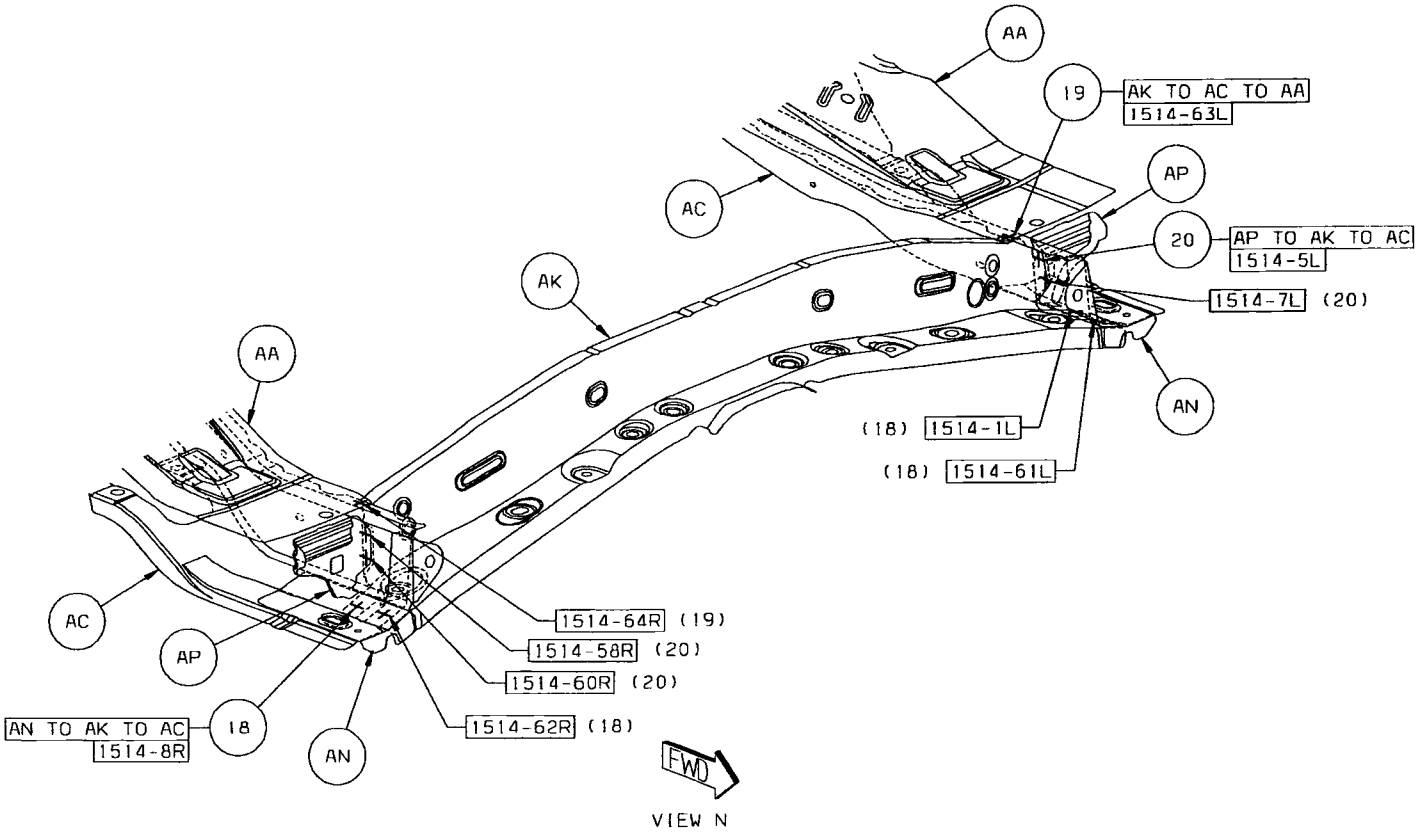

Back to Index

21 AE TO AD 12/SD S/WELDS (ORD)

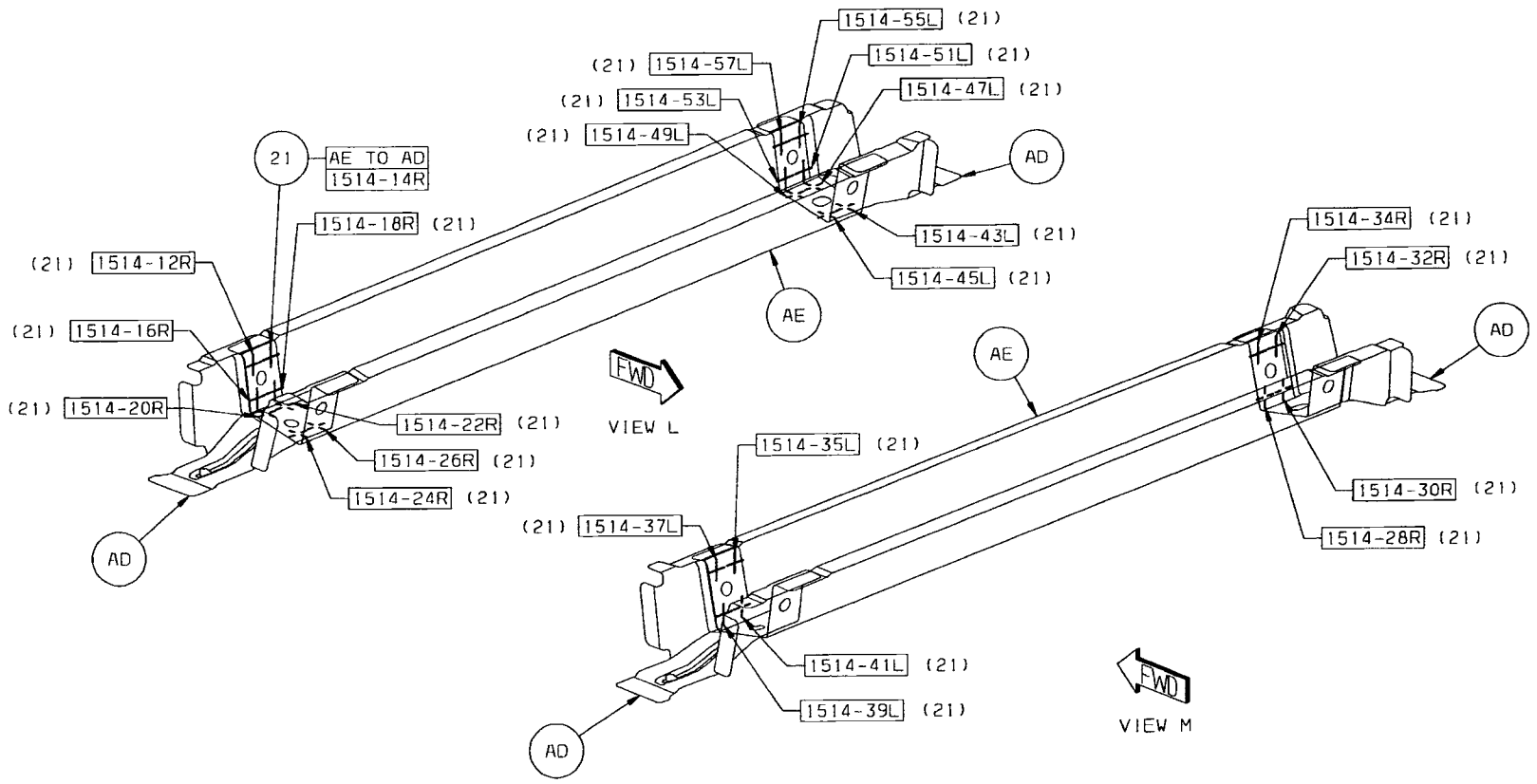

Back to Index

22 AJ TO AB 8 S/WELDS (ORD)

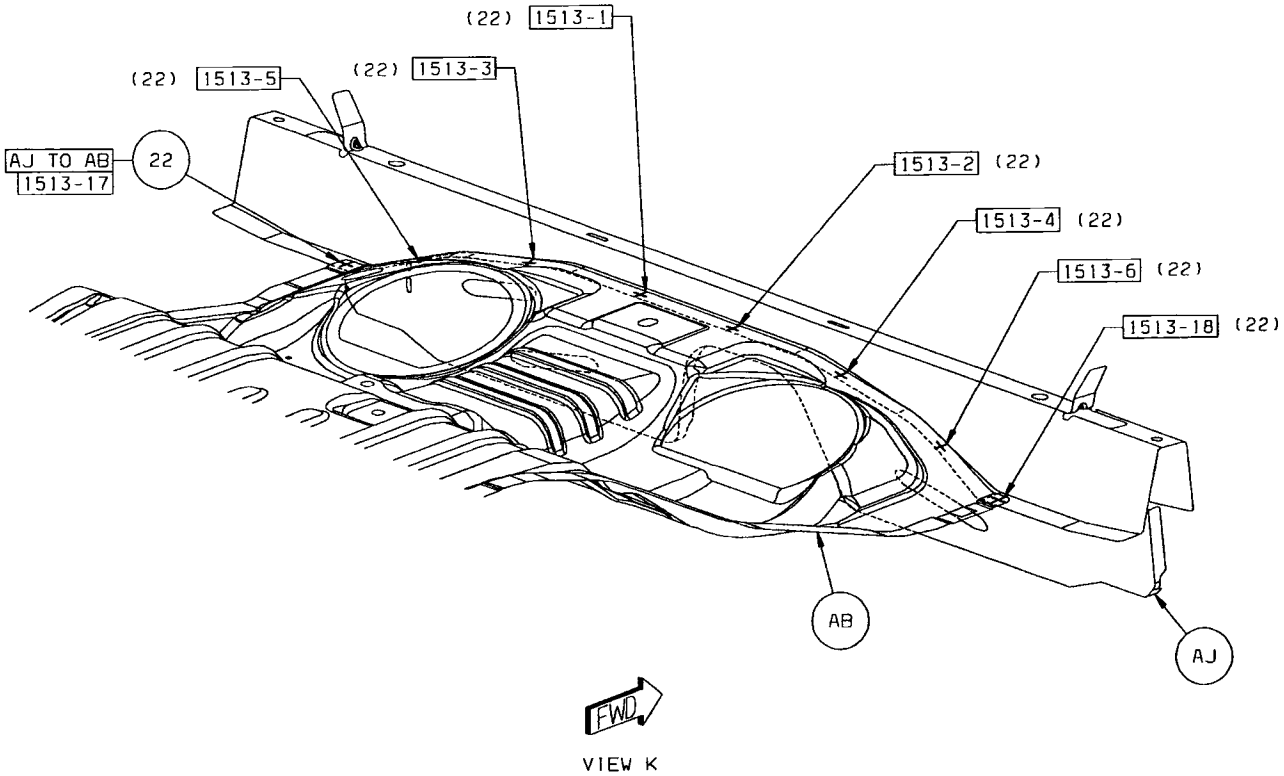

Back to Index

23 AD TO AB 1/SD STRUC ADH
24 AM TO AJ TO AA 1/SD STRUC ADH

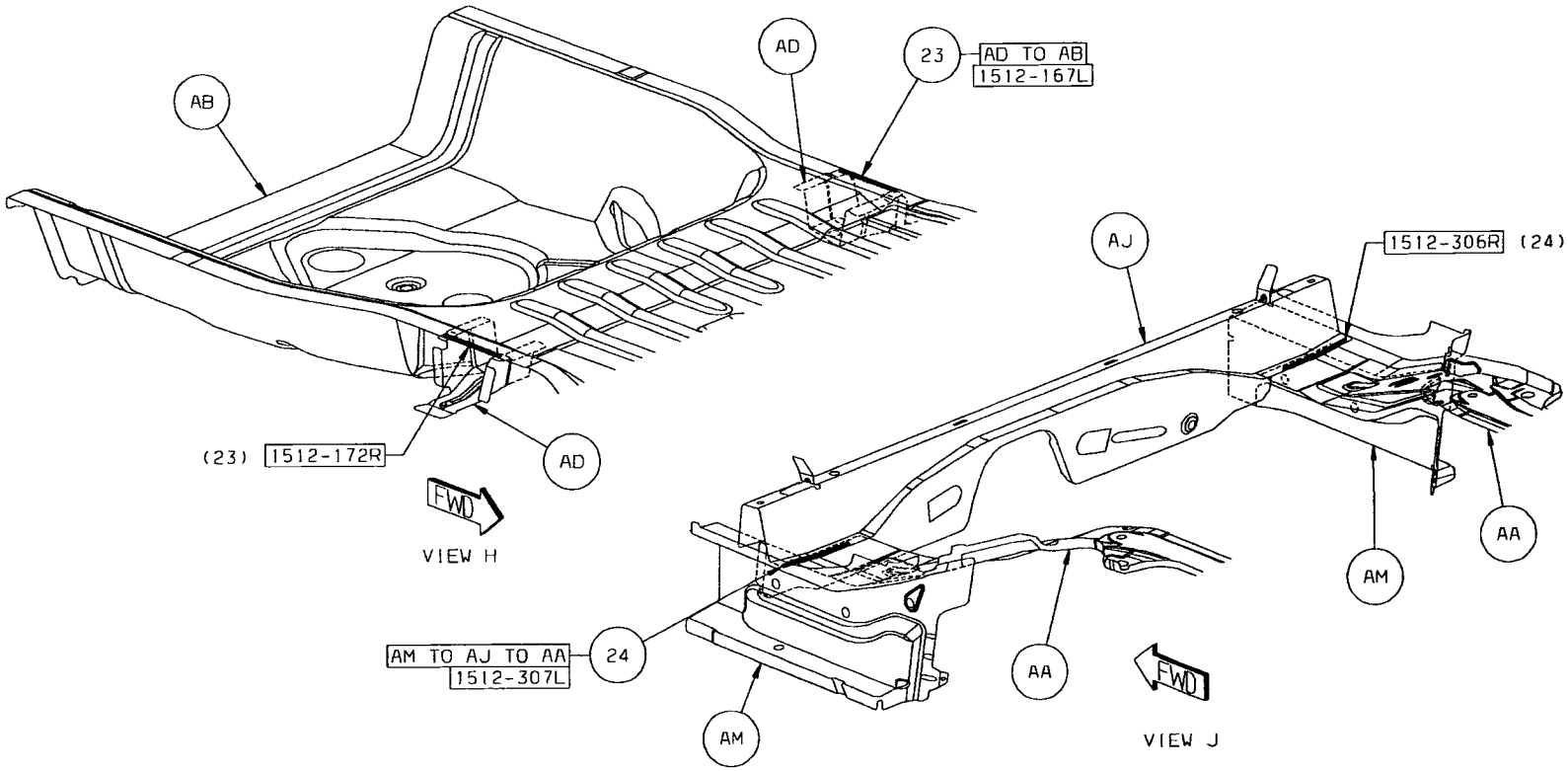

Back to Index

CHRYSLER SEBRING/DODGE AVENGER REAR FLOOR COMPLETE (COMMON) SECTION

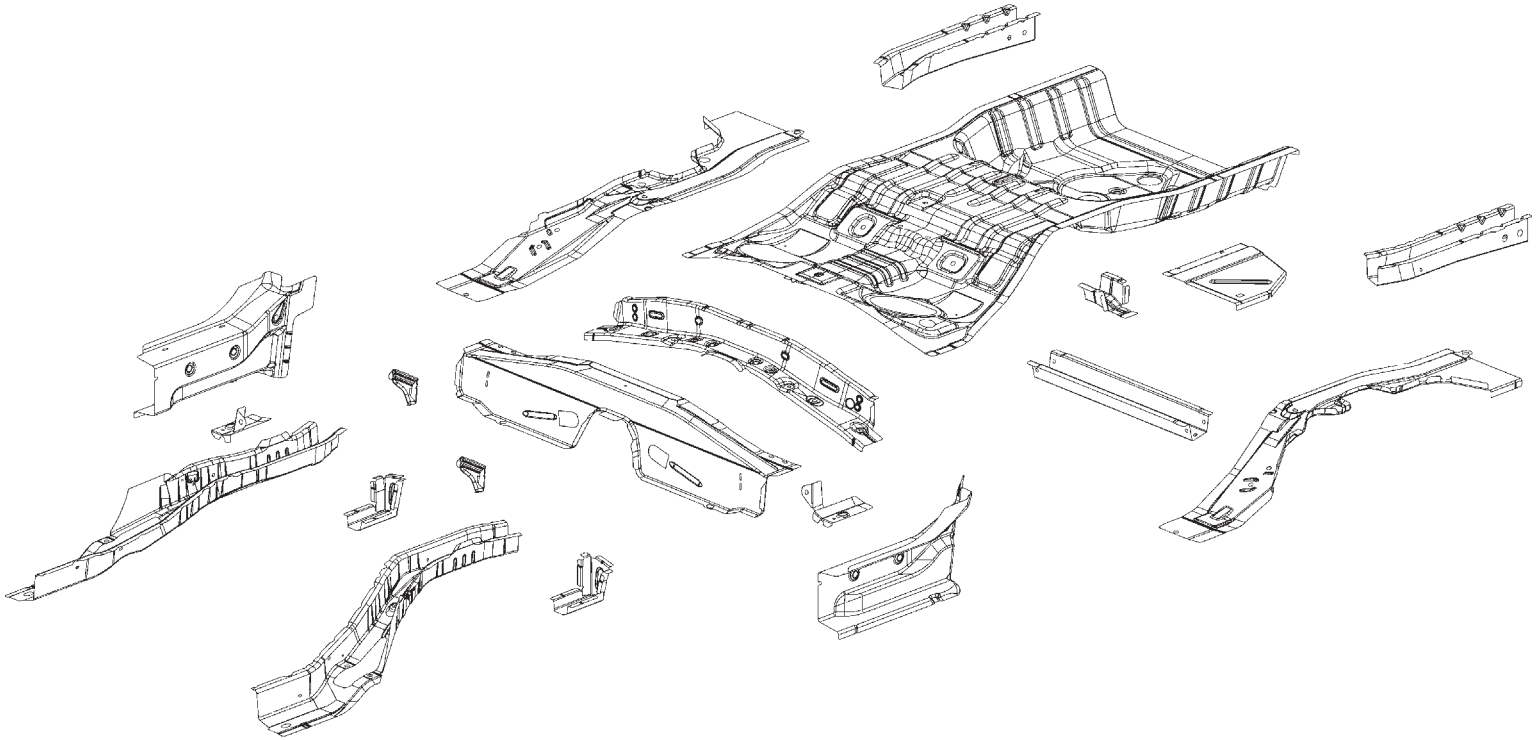

AA PAN – RR FLR PAN –
AB EXTENSION – RR FLOOR –
AC CROSSMEMBER – RR SEAT –
AD EXTENSION – SIDEMEMBER FRT FLOOR LT –
AD EXTENSION – SIDEMEMBER FRT FLOOR RT –
AE CROSSMEMBER – RR FLOOR FRT –
AF EXTENSION – RR FLOOR CROSSMEMBER FRT RT – NONE
AF EXTENSION – RR FLOOR CROSSMEMBER FRT LT – NONE
AG EXTENSION – RR FLOOR SIDEMEMBER RT –
AG EXTENSION – RR FLOOR SIDEMEMBER LT –
AH SILL – RR FLOOR SIDEMEMBER RT –
AH SILL – RR FLOOR SIDEMEMBER LT –
AJ SIDEMEMBER – RR FLOOR UPR RT –
AJ SIDEMEMBER – RR FLOOR UPR LT –
AK SIDEMEMBER – RR FLOOR UPR RT –
AK SIDEMEMBER – RR FLOOR UPR LT –
AL EXTENSION – RR FLOOR SIDEMEMBER RT –
AL EXTENSION – RR FLOOR SIDEMEMBER LT –
AM EXTENSION – RR FLOOR SIDEMEMBER RT –
AM EXTENSION – RR FLOOR SIDEMEMBER LT –
AN BULKHEAD – RR FLOOR SIDEMEMBER RT –
AN BULKHEAD – RR FLOOR SIDEMEMBER LT –

Back to Index

PARTS IDENTIFICATION LEGEND, OVERVIEW 22

AA PAN – RR FLR PAN –
AB EXTENSION – RR FLOOR –
AC CROSSMEMBER – RR SEAT –
AD EXTENSION – SIDEMEMBER FRT FLOOR LT –
AD EXTENSION – SIDEMEMBER FRT FLOOR RT –
AE CROSSMEMBER – RR FLOOR FRT –
AF EXTENSION – RR FLOOR CROSSMEMBER FRT RT – NONE
AF EXTENSION – RR FLOOR CROSSMEMBER FRT LT – NONE
AG EXTENSION – RR FLOOR SIDEMEMBER RT –
AG EXTENSION – RR FLOOR SIDEMEMBER LT –
AH SILL – RR FLOOR SIDEMEMBER RT –
AH SILL – RR FLOOR SIDEMEMBER LT –
AJ SIDEMEMBER – RR FLOOR UPR RT –
AJ SIDEMEMBER – RR FLOOR UPR LT –
AK SIDEMEMBER – RR FLOOR UPR RT –
AK SIDEMEMBER – RR FLOOR UPR LT –
AL EXTENSION – RR FLOOR SIDEMEMBER RT –
AL EXTENSION – RR FLOOR SIDEMEMBER LT –
AM EXTENSION – RR FLOOR SIDEMEMBER RT –
AM EXTENSION – RR FLOOR SIDEMEMBER LT –
AN BULKHEAD – RR FLOOR SIDEMEMBER RT –
AN BULKHEAD – RR FLOOR SIDEMEMBER LT –

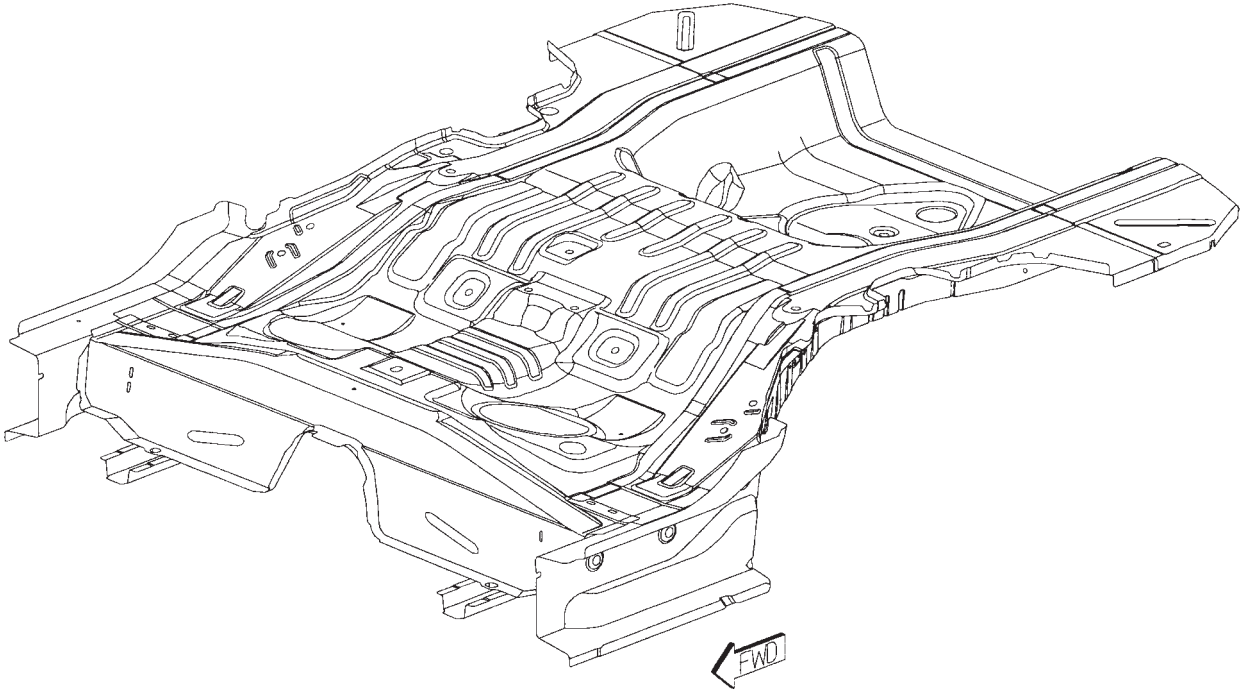

Back to Index

WELD LAYOUT LOCATION GUIDE

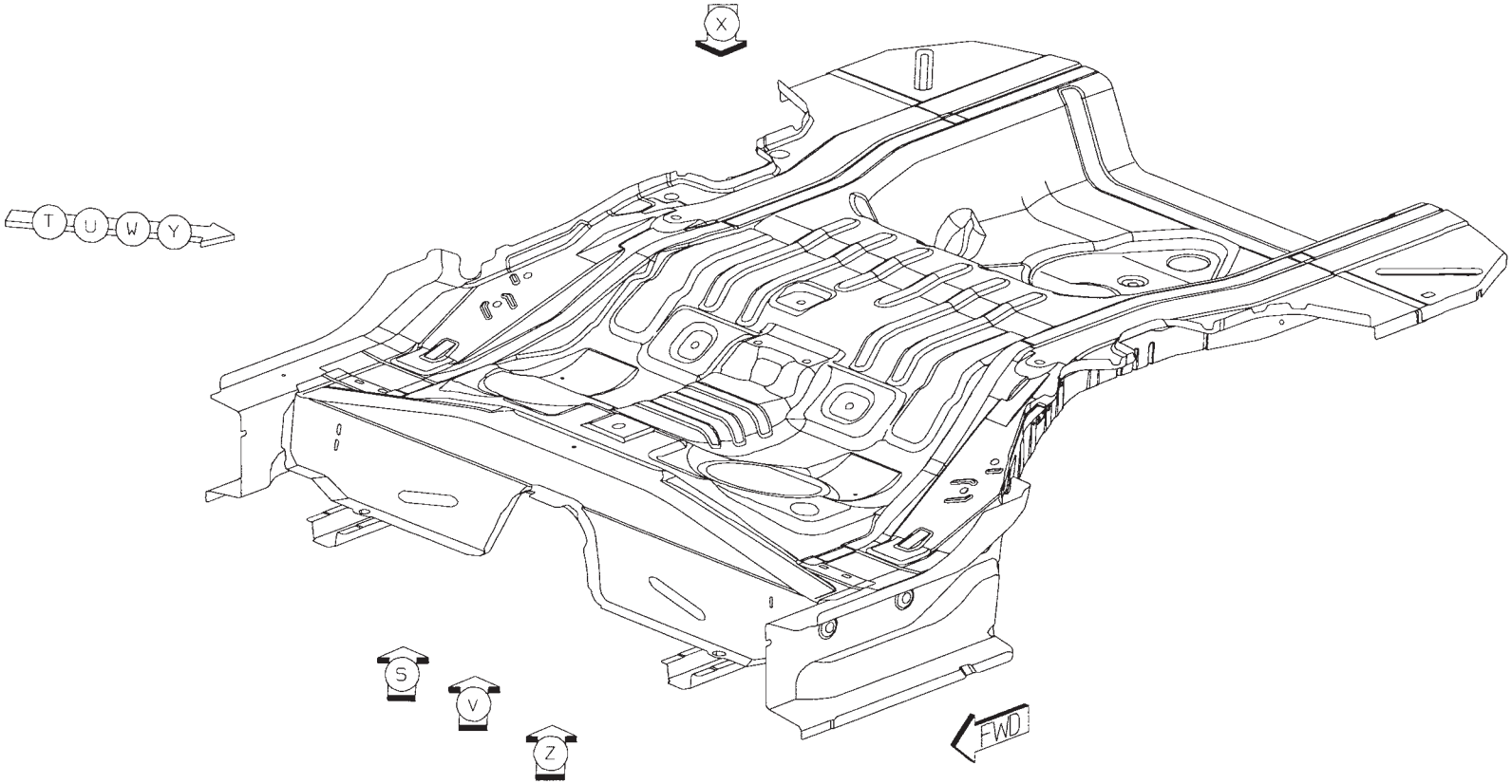

Back to Index

01 AB TO AD 4/SD S/WELDS (ORD)
02 AB TO AC 21 S/WELD (ORD)
03 AB TO AC TO AD 2/SD S/WELDS (ORD)
04 AB TO AA 4/SD S/WELDS (ORD)
05 AA TO AB TO AC 19 A/WELDS (ORD)

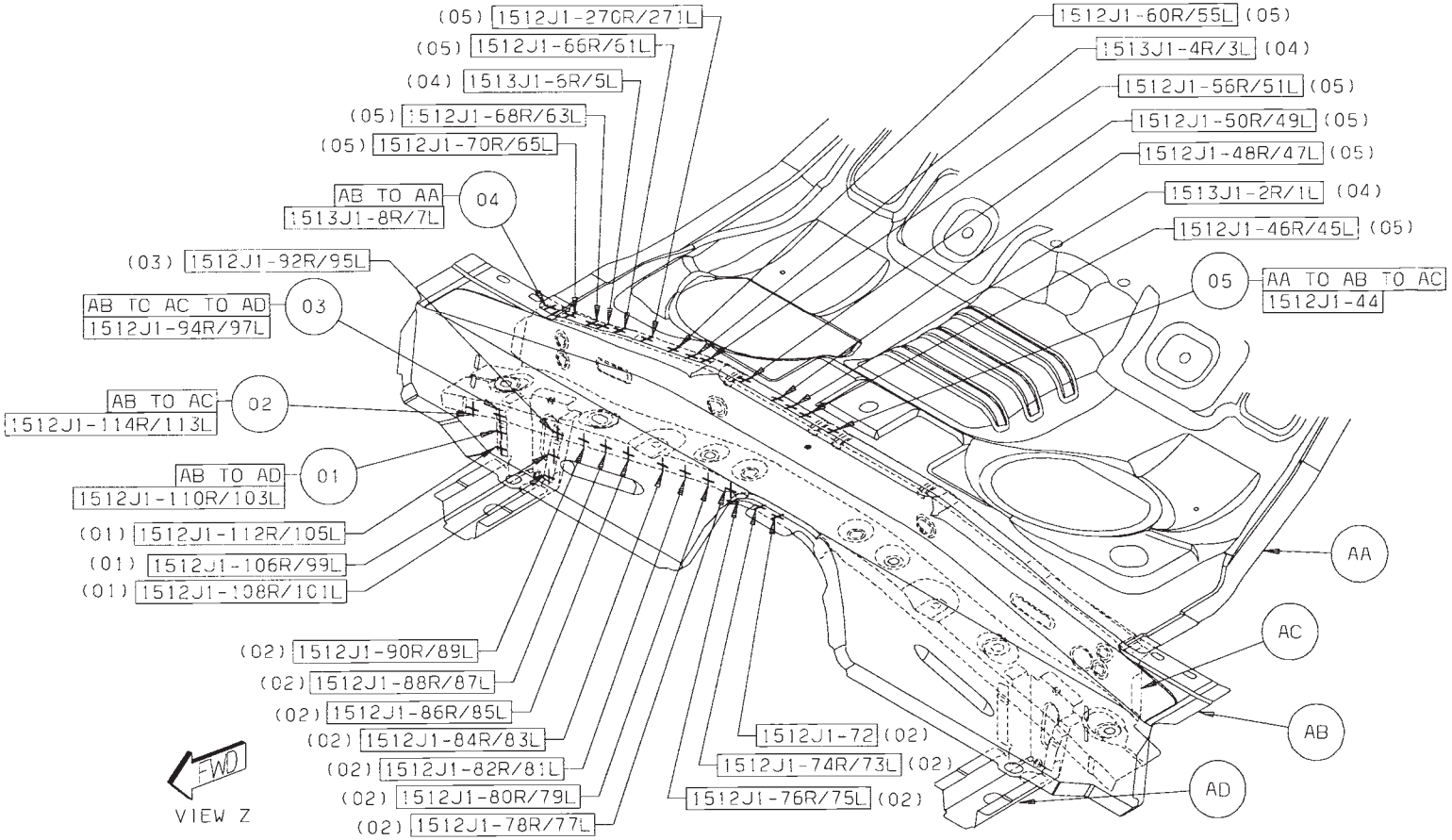

Back to Index

06 AF TO AE 12/SD S/WELDS (ORD)
07 AG TO AK TO AC 2/SD S/WELDS (ORD)

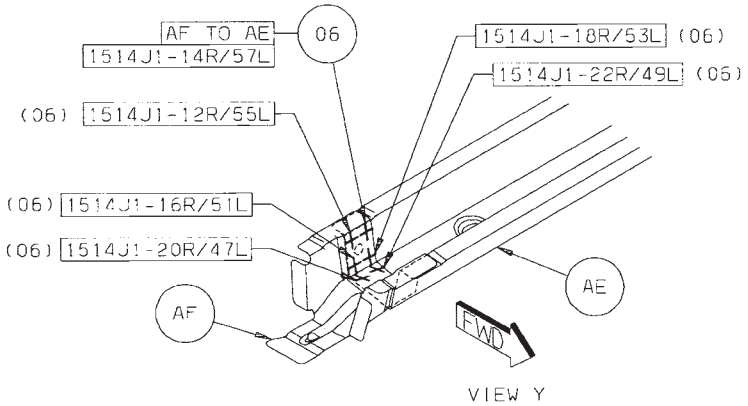

VIEW Y

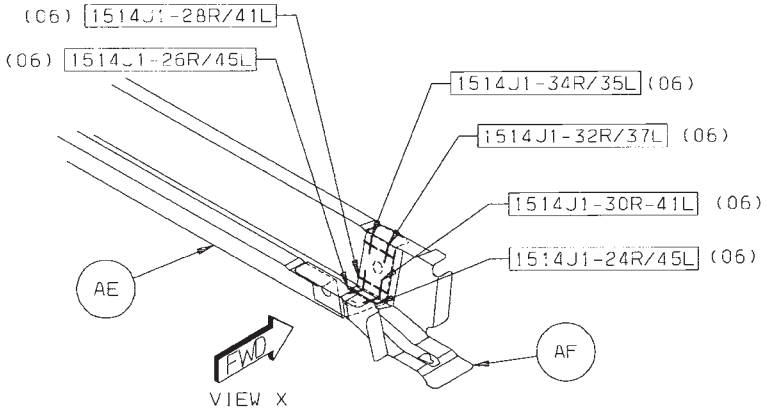

VIEW X

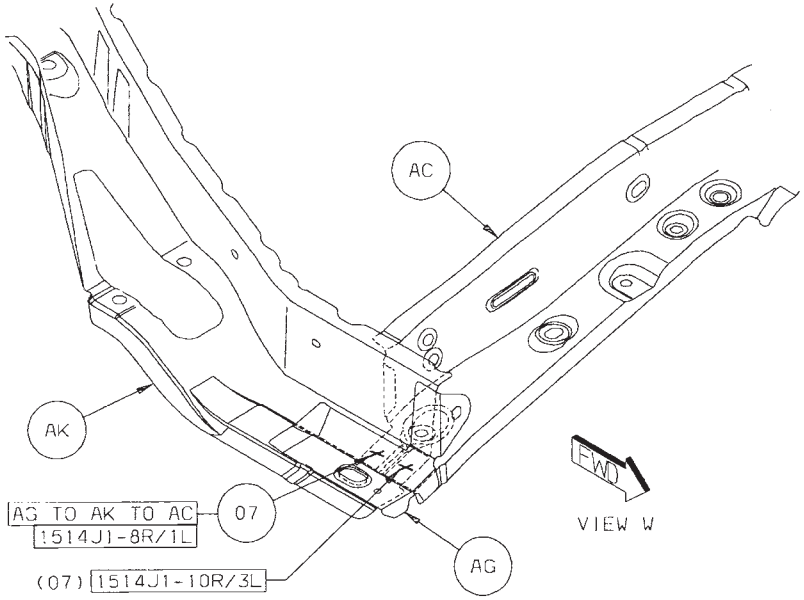

VIEW W

Back to Index

08 AJ TO AA 16/SD S/WELDS (ORD)
09 AE TO AA 14/SD S/WELDS (ORD)

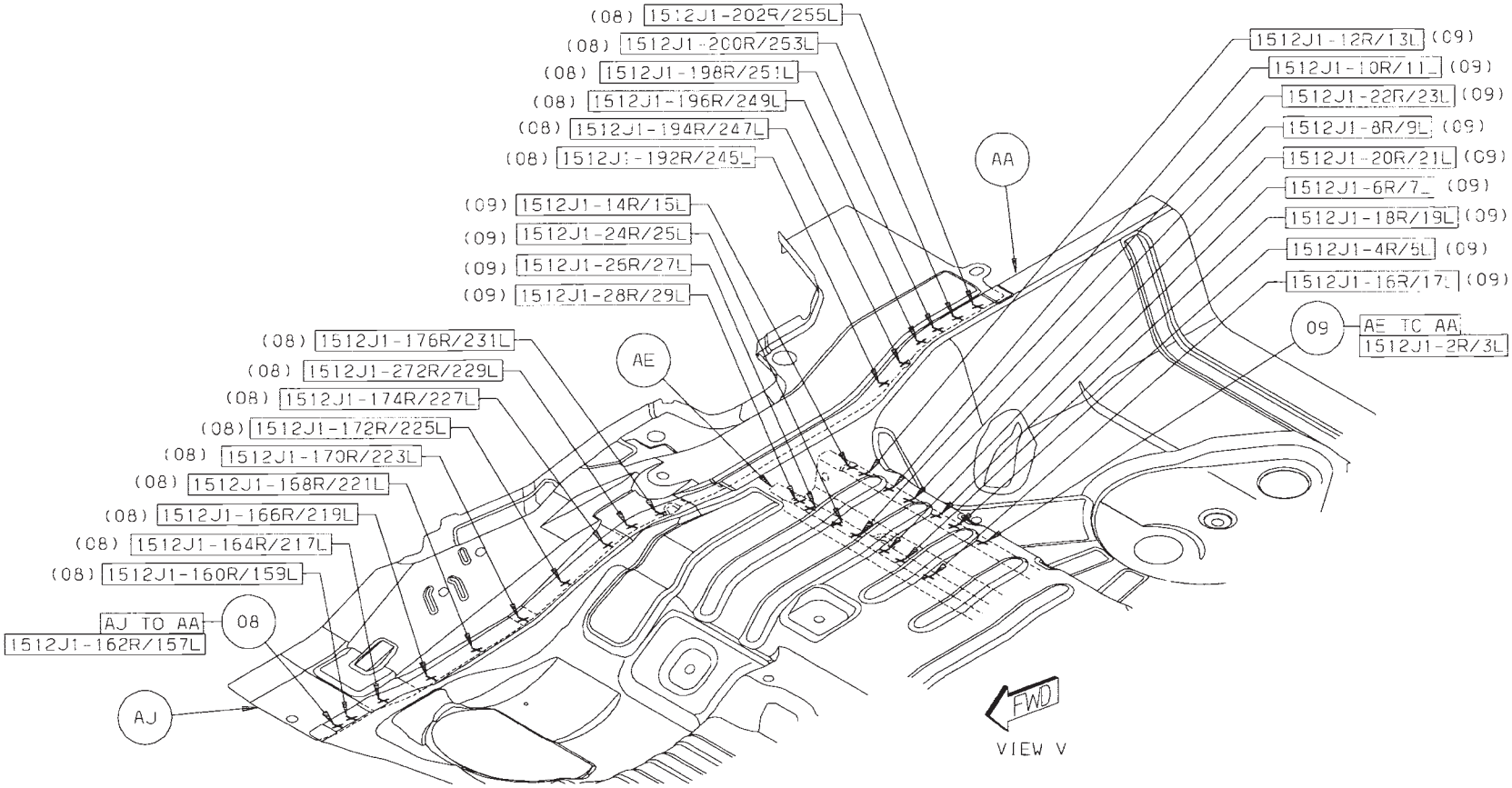

Back to Index

10 AC TO AK TO AN 2/SD S/WELDS (ORD)
11 AC TO AK TO AJ 1/SD S/WELDS (ORD)
12 AJ TO AK TO AA 5/SD S/WELDS (ORD)
13 AA TO AL TO AM 7/SD S/WELDS (ORD)
14 AA TO AM 1/SD S/WELDS (ORD)
15 AE TO AF TO AA 4/SD S/WELDS (ORD)

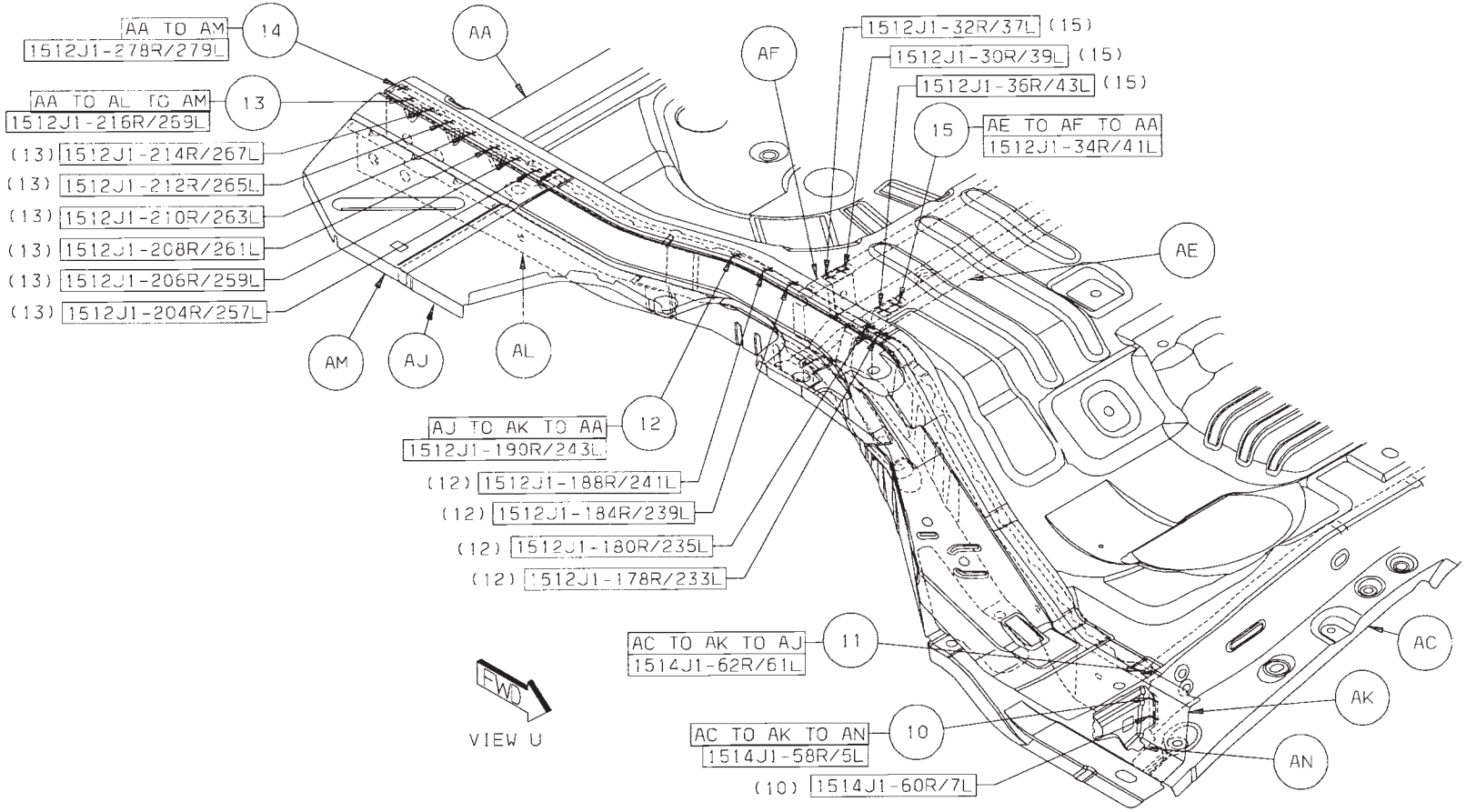

Back to Index

16 AA TO AJ 1/SD STRUC ADH
17 AG TO AB 2/SD ARC WELDS (ORD)
18 AC TO AG TO AB 1/SD S/WELDS (ORD)
19 AG TO AB 1/SD S/WELDS (ORD)
20 AH TO AB 4/SD S/WELDS (ORD)
21 AH TO AB TO AJ 1/SD S/WELDS (ORD)
22 AJ TO AB 2/SD ARC WELDS (ORD)

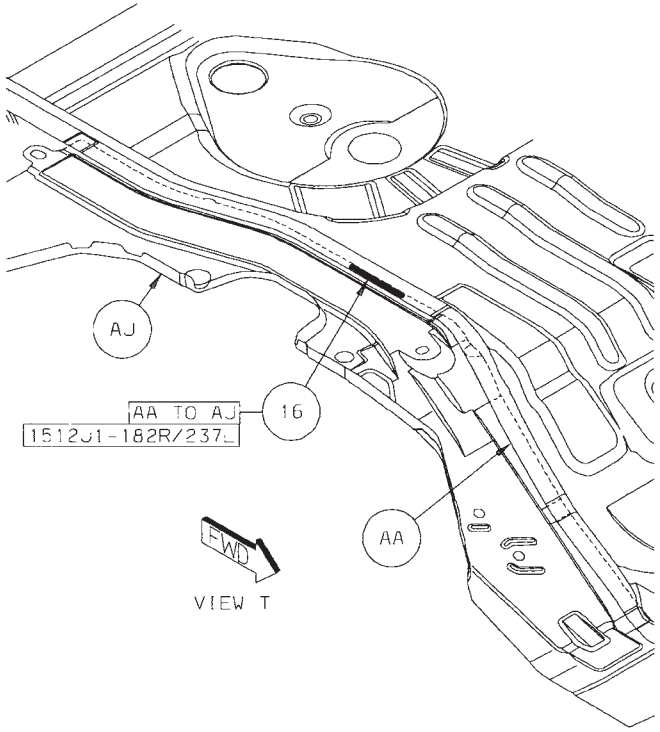

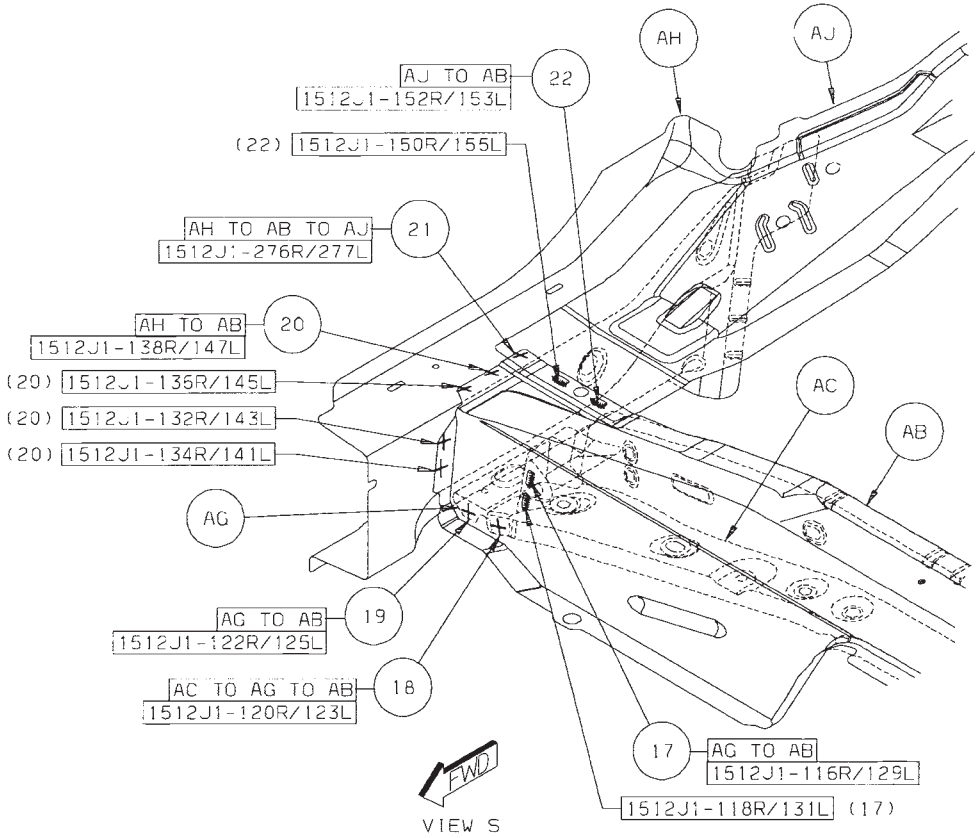

Back to Index

CHRYSLER SEBRING REAR SEAT BULKHEAD SECTION

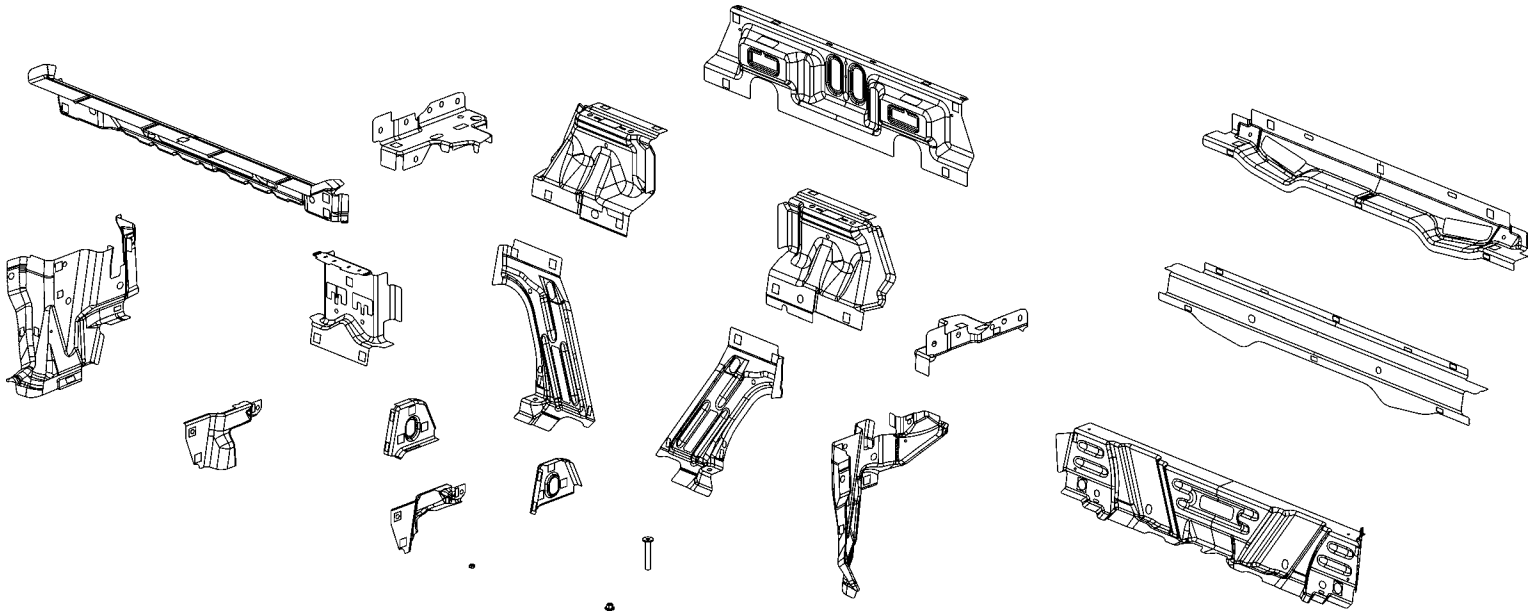

AA BULKHEAD – REINF –
AA BULKHEAD – REINF –
AB REINF – BULKHEAD –
AB REINF – BULKHEAD –
AC REINF – BULKHEAD –
AC REINF – BULKHEAD – NONE.
AD BULKHEAD – RR SEAT FRT –
AE PLATE – FOLDING TOP MOUNTING ADJUSTMENT –
AE PLATE – FOLDING TOP MOUNTING ADJUSTMENT –
AF BULKHEAD – CROSSMEMBER –
AG 06104990AA NUT/WELD.HEX – NIBS.NO.FIN – BULKHEAD REINF RT/LT (2/SD)
AH REINF – SEAT BACK MTG RT –
AH REINF – SEAT BACK MTG LT –
AJ 06104987AA NUT/WELD.HEX – NIBS.NO.FIN.PILOT.PT – SEAT BACK MTG REINF RT/LT (2/SD)
AK 06104990AA NUT/WELD.HEX – NIBS.NO.FIN – FOLDING TOP MTG ADJ PLATE RT/LT (2/SD)
AL REINF – RR SEAT BACK PANEL TO RESTRAINT RETRACTOR RT –
AL REINF – RR SEAT BACK PANEL TO RESTRAINT RETRACTOR LT –
AM BULKHEAD – REINF –
AN 06104972AA STUD.WELD/INTERNAL – HEADER.PT.NIBS.NO.FIN – BULKHEAD REINF RT/LT (1/SD)
AP BULKHEAD – REINF –
AR REINF – SEAT BACK MTG RT –
AR REINF – SEAT BACK MTG LT –
AS SPACER – CROSSMEMBER –
AT BULKHEAD – RR SEAT RR – NONE.
AU REINF – BULKHEAD TRIM – NONE.
AV 06104991AA NUT/WELD.HEX – NIBS.NO.FIN. – RR SEAT BACK PNL TO RESTRAINT RETRACTOR RT/LT (1/SD)
AW 06104987AA NUT/WELD.HEX – NIBS.NO.FIN.PILOT.PT – BULKHEAD CROSSMEMBER (4)

Back to Index

PARTS IDENTIFICATION LEGEND, OVERVIEW 9

AA BULKHEAD – REINF –
AA BULKHEAD – REINF –
AB REINF – BULKHEAD –
AB REINF – BULKHEAD –
AC REINF – BULKHEAD –
AC REINF – BULKHEAD – NONE.
AD BULKHEAD – RR SEAT FRT –
AE PLATE – FOLDING TOP MOUNTING ADJUSTMENT –
AE PLATE – FOLDING TOP MOUNTING ADJUSTMENT –
AF BULKHEAD – CROSSMEMBER –
AG 06104990AA NUT/WELD.HEX – NIBS.NO.FIN – BULKHEAD REINF RT/LT (2/SD)
AH REINF – SEAT BACK MTG RT –
AH REINF – SEAT BACK MTG LT –
AJ 06104987AA NUT/WELD.HEX – NIBS.NO.FIN.PILOT.PT – SEAT BACK MTG REINF RT/LT (2/SD)
AK 06104990AA NUT/WELD.HEX – NIBS.NO.FIN – FOLDING TOP MTG ADJ PLATE RT/LT (2/SD)
AL REINF – RR SEAT BACK PANEL TO RESTRAINT RETRACTOR RT –
AL REINF – RR SEAT BACK PANEL TO RESTRAINT RETRACTOR LT –
AM BULKHEAD – REINF –
AN 06104972AA STUD.WELD/INTERNAL – HEADER.PT.NIBS.NO.FIN – BULKHEAD REINF RT/LT (1/SD)
AP BULKHEAD – REINF –
AR REINF – SEAT BACK MTG RT –
AR REINF – SEAT BACK MTG LT –
AS SPACER – CROSSMEMBER –
AT BULKHEAD – RR SEAT RR – NONE.
AU REINF – BULKHEAD TRIM – NONE.
AV 06104991AA NUT/WELD.HEX – NIBS.NO.FIN. – RR SEAT BACK PNL TO RESTRAINT RETRACTOR RT/LT (1/SD)
AW 06104987AA NUT/WELD.HEX – NIBS.NO.FIN.PILOT.PT – BULKHEAD CROSSMEMBER (4)

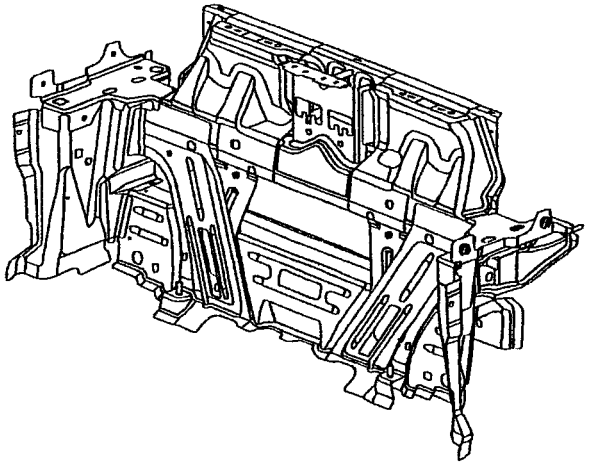

Back to Index

WELD LAYOUT LOCATION GUIDE

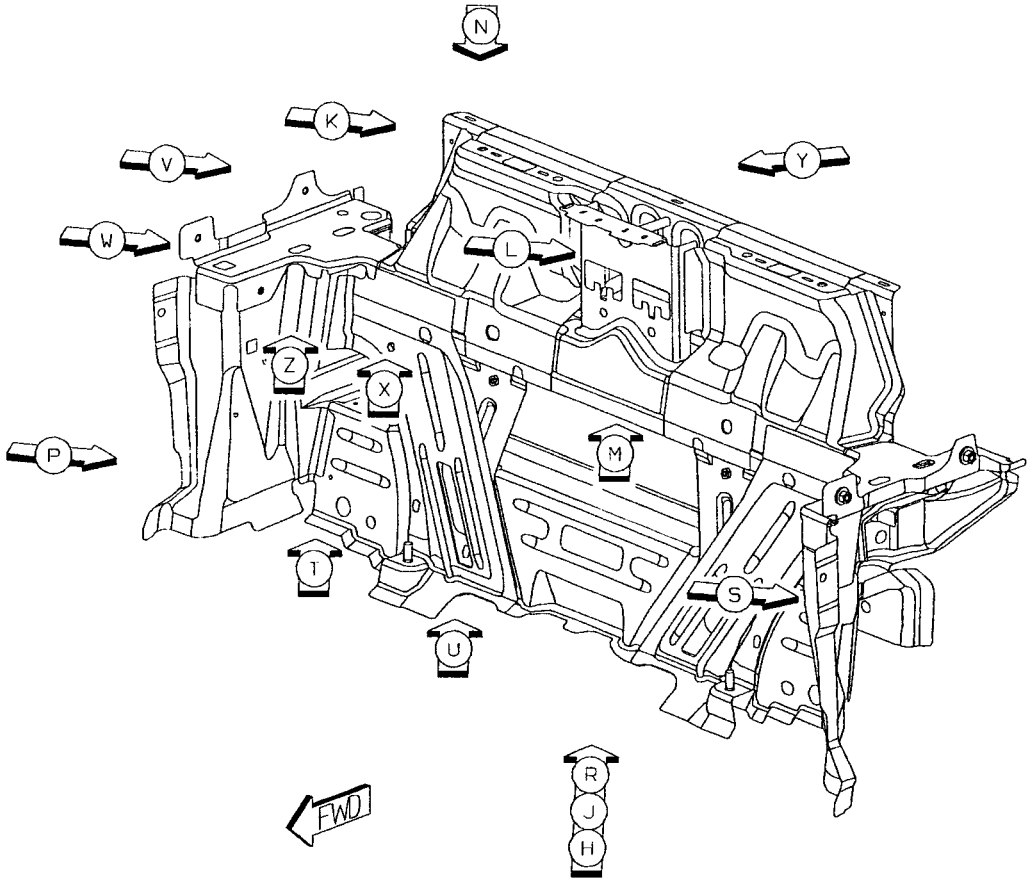

Back to Index

01 AB TO AA TO AE 1/SD S/WELD (ORD)
02 AB TO AA 7/SD S/WELDS (ORD)
03 AB TO AD TO AE 2/SD S/WELDS (ORD)
04 AB TO AD 4/SD S/WELDS (ORD)
05 AB TO AC TO AD 1/SD S/WELD (ORD)

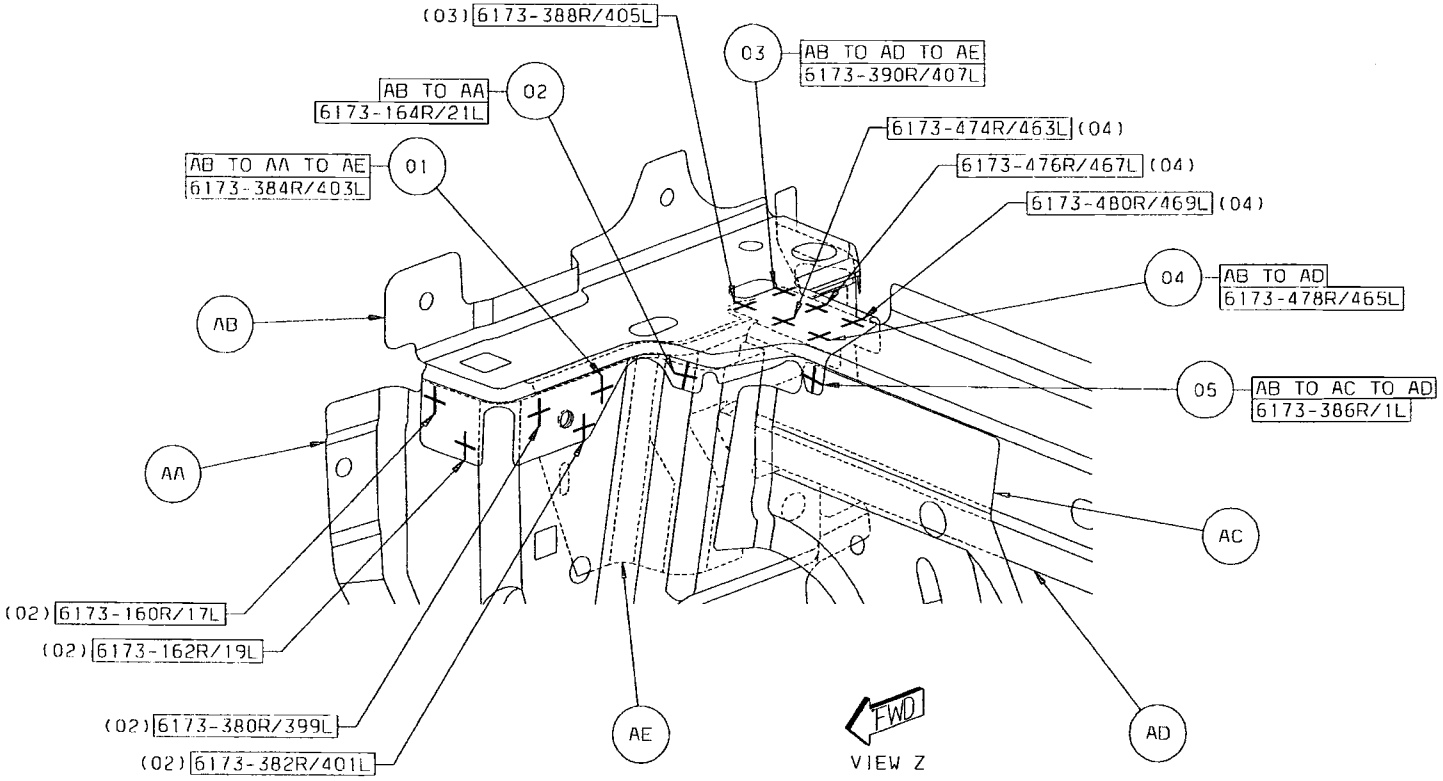

Back to Index

06 AJ TO AH 2/SD PROJ WELDS (ORD)
07 AF TO AB 1/SD S/WELD (ORD)
08 AF TO AA 1/SD S/WELD (ORD)
09 AB TO AB 2/SD PROJ WELDS (ORD)
10 AE TO AA 1/SD S/WELD (ORD)
11 AH TO AF TO AA 1/SD S/WELD (ORD)
12 AH TO AA 2/SD S/WELDS (ORD)

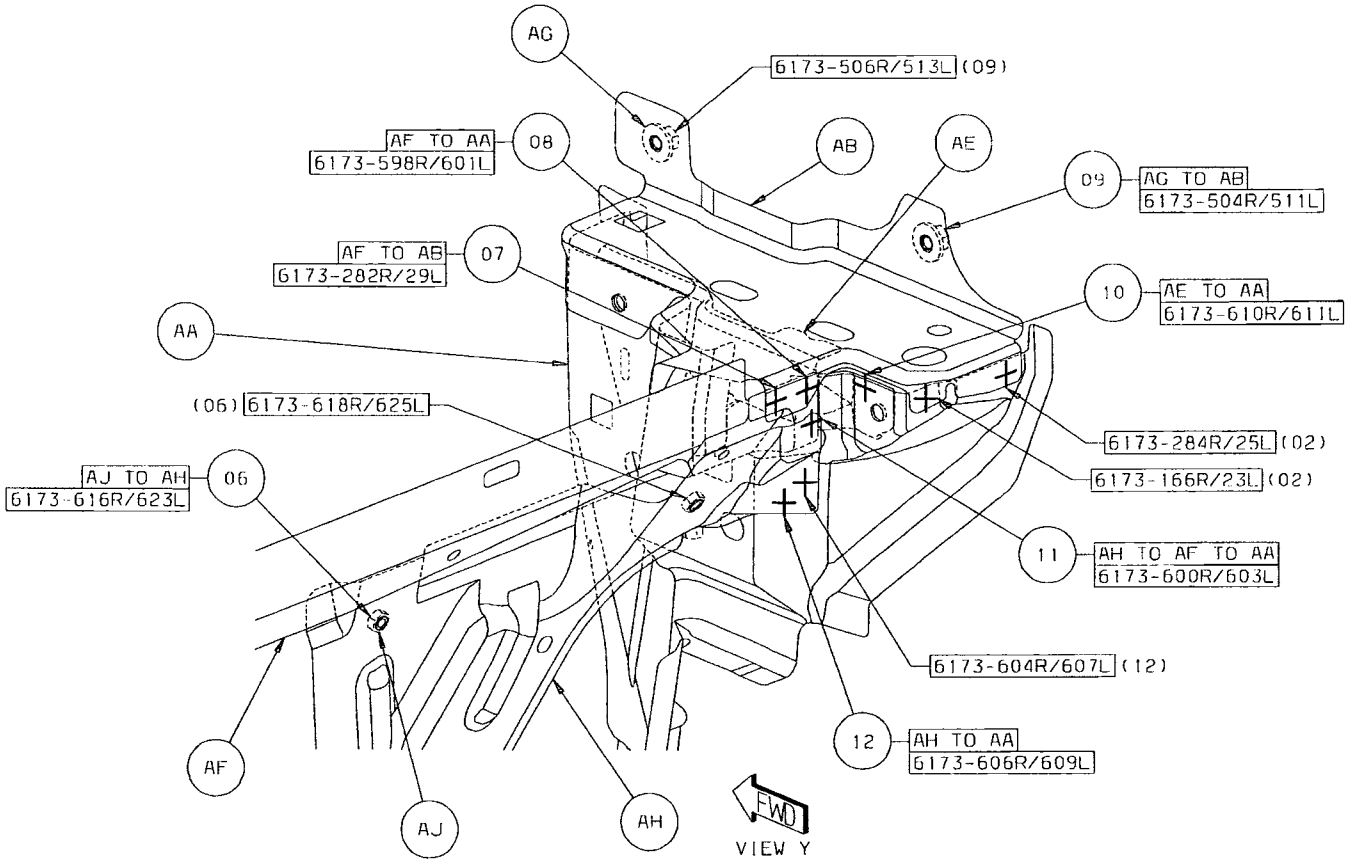

Back to Index

13 AA TO AC 4/SD S/WELDS (ORD)
14 AC TO AD TO AF 1/SD S/WELD (ORD)
15 AF TO AH TO AC 1/SD S/WELD (ORD)
16 AC TO AD 5/SD S/WELDS (ORD)
17 AK TO AE 2/SD PROJ WELDS (ORD)
18 AD TO AF TO AA 1/SD S/WELD (ORD)
19 AE TO AF 1/SD S/WELD (ORD)
20 AA TO AD 1/SD S/WELD (ORD)

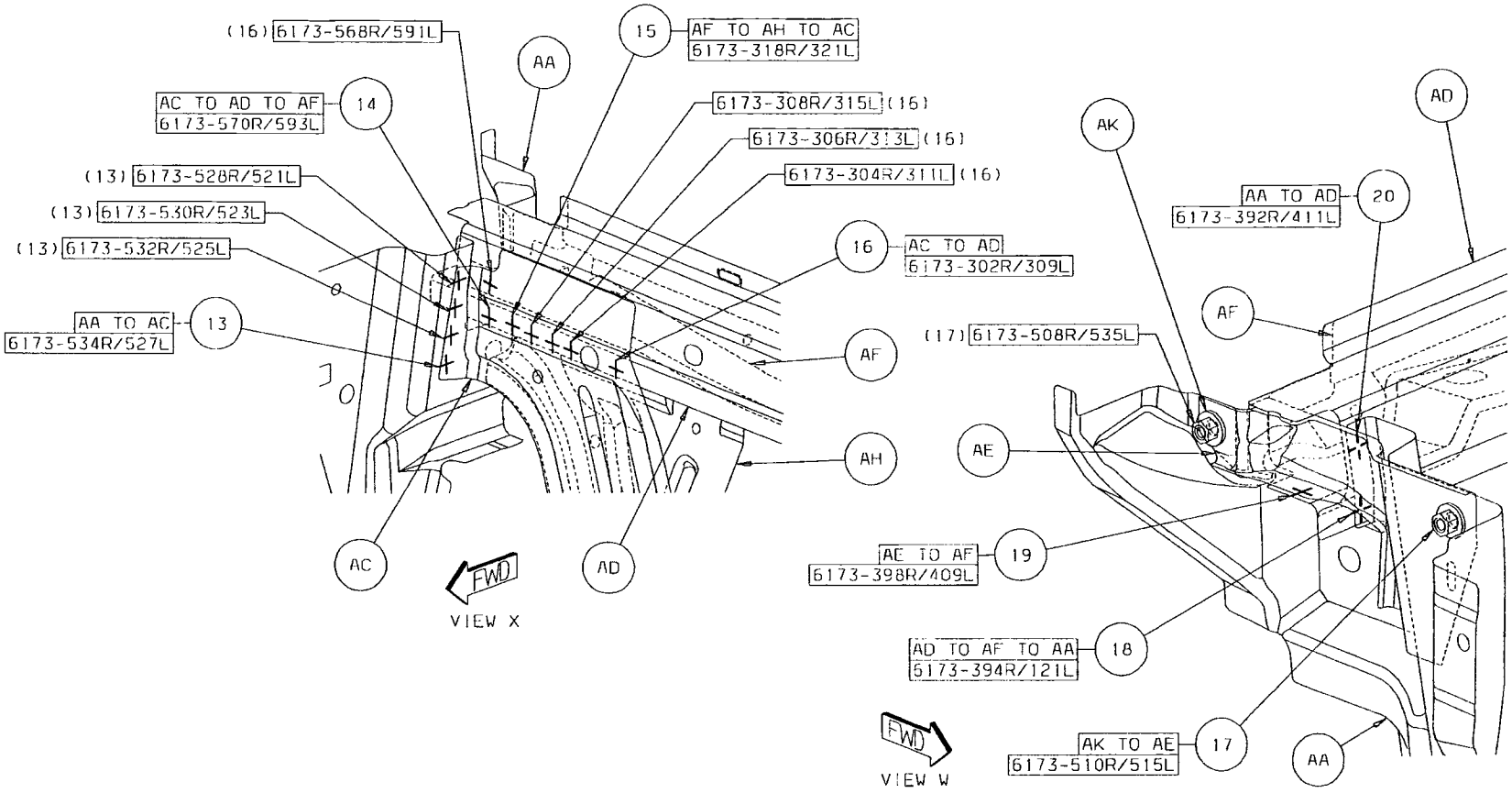

Back to Index

21 AL TO AA TO AD 6/SD S/WELDS (ORD)
22 AD TO AL 6/SD S/WELDS (ORD)
23 AL TO AF TO AD 2/SD S/WELDS (ORD)
24 AD TO AF TO AH 3/SD S/WELD (ORD)
25 AL TO AF 2/SD S/WELDS (ORD)

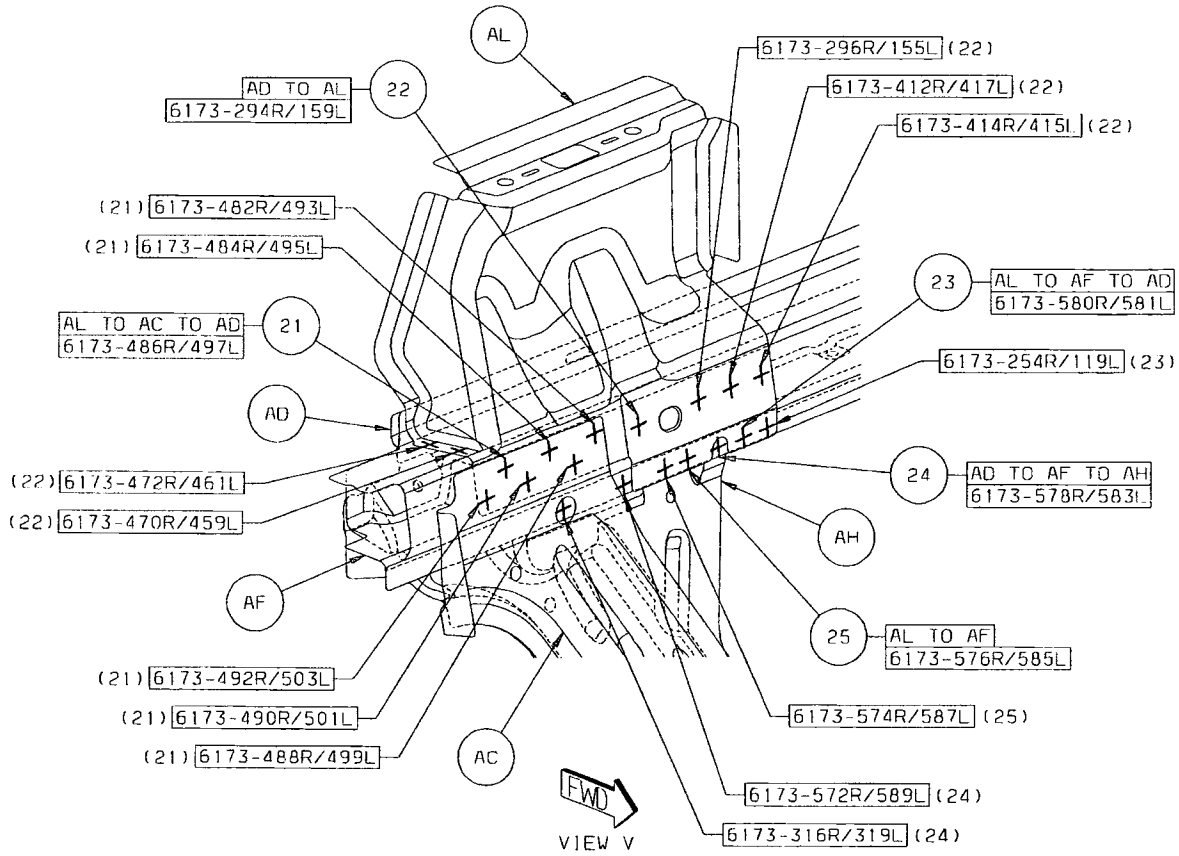

Back to Index

26 AN TO AC 1/SD PROJ WELD (ORD)
27 AC TO AH 6/SD S/WELDS (ORD)
28 AC TO AH TO AM 9/SD S/WELDS (ORD)
29 AC TO AM 2/SD S/WELD (ORD)

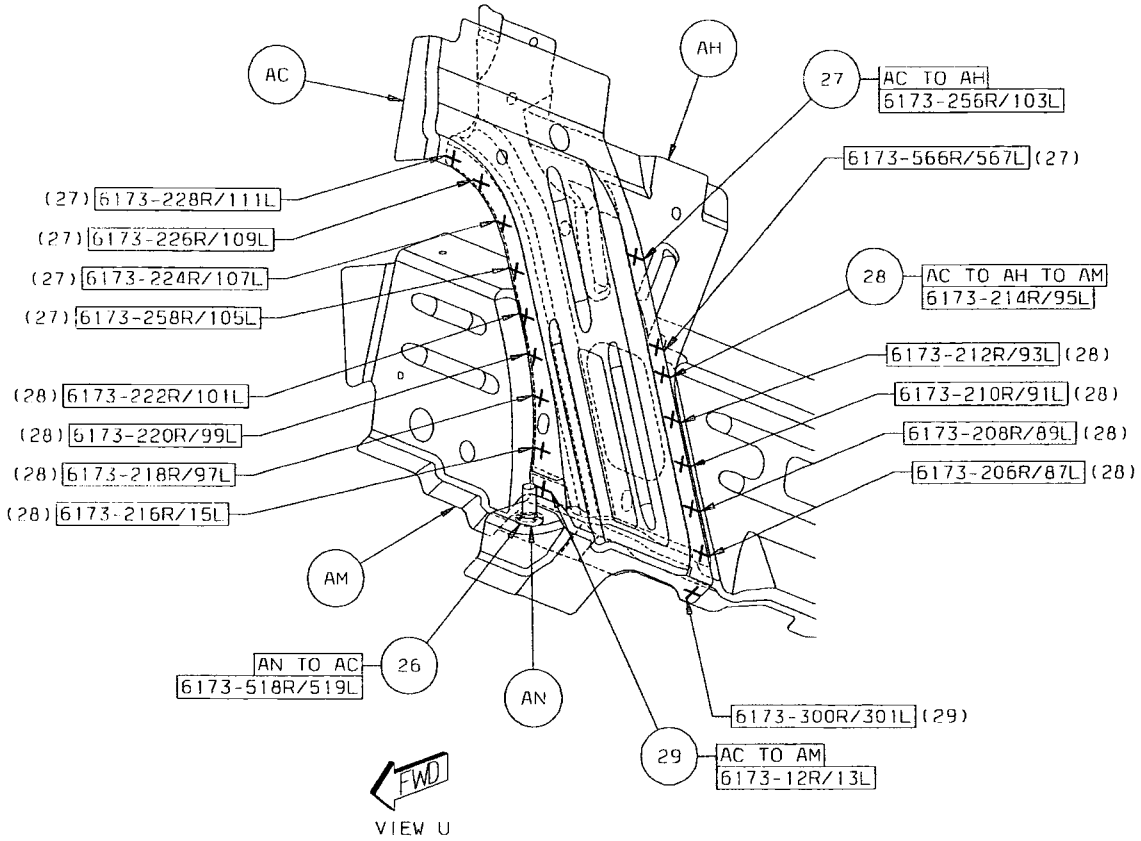

Back to Index

30 AP TO AA 3R S/WELDS (ORD)
31 AP TO AM TO AA 1R S/WELD (ORD)
32 AM TO AA 6R S/WELDS (ORD)
33 AP TO AM TO AA 1L S/WELD (ORD)
34 AP TO AA 3L S/WELDS (ORD)
35 AM TO AA 8L S/WELDS (ORD)

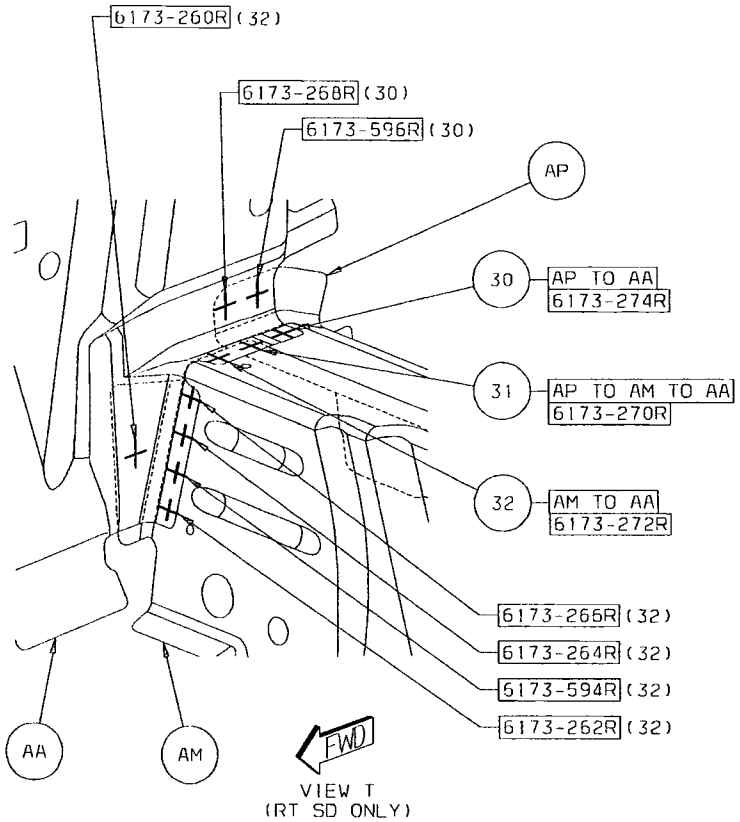

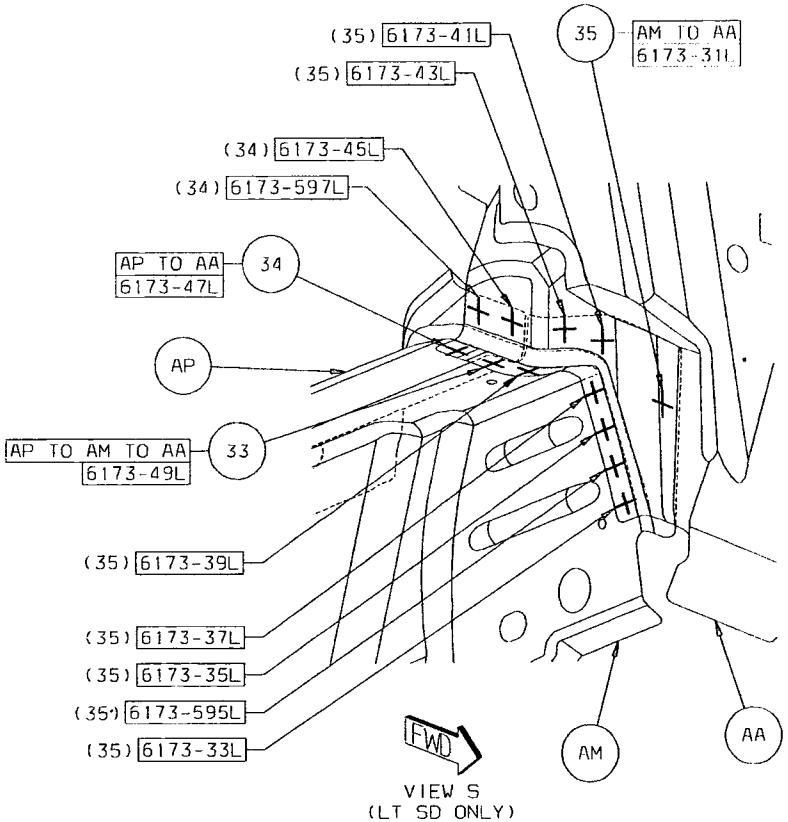

Back to Index

36 AP TO AM 21 S/WELDS (ORD)

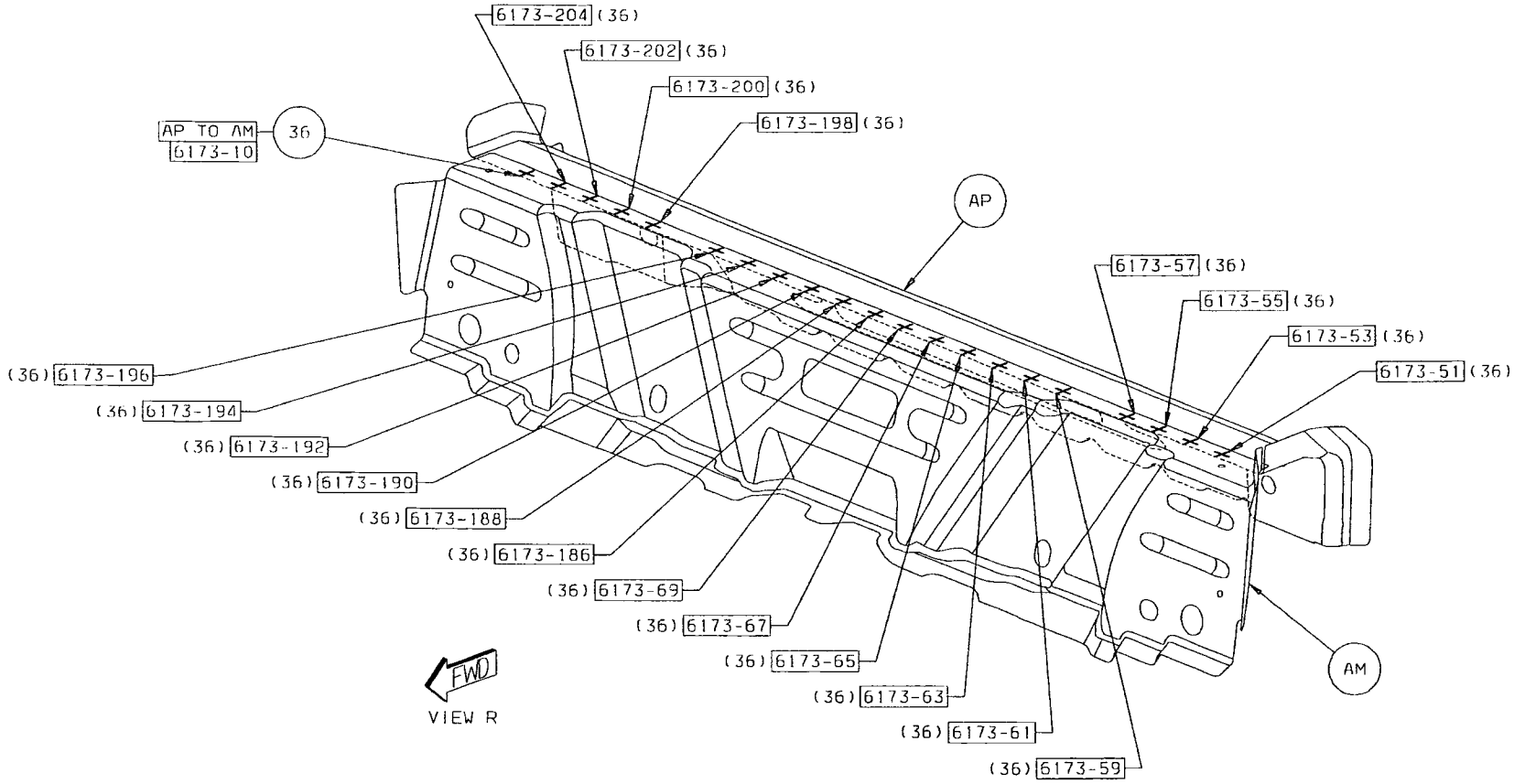

Back to Index

37 AR TO AM 5/SD S/WELDS (ORD)
38 AR TO AP 5/SD S/WELDS (ORD)
39 AP TO AR TO AM 1/SD S/WELD (ORD)

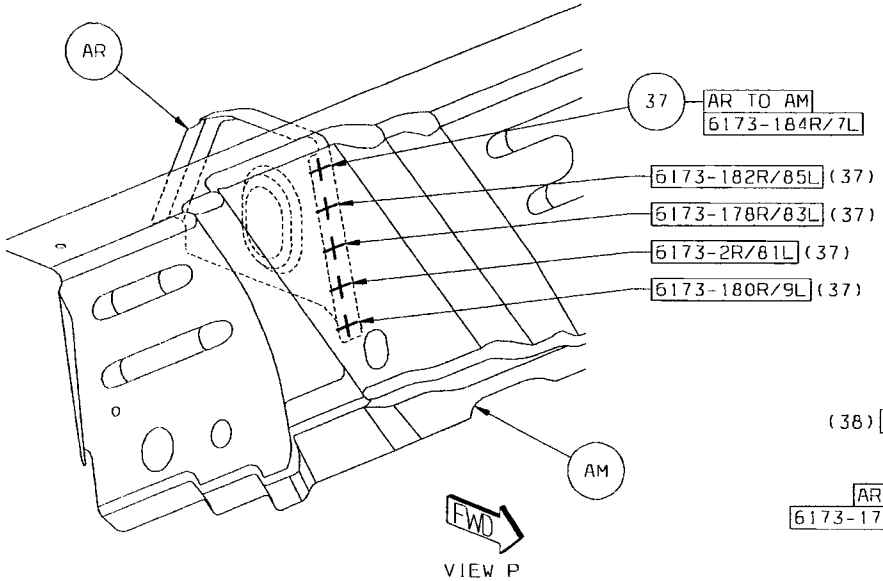

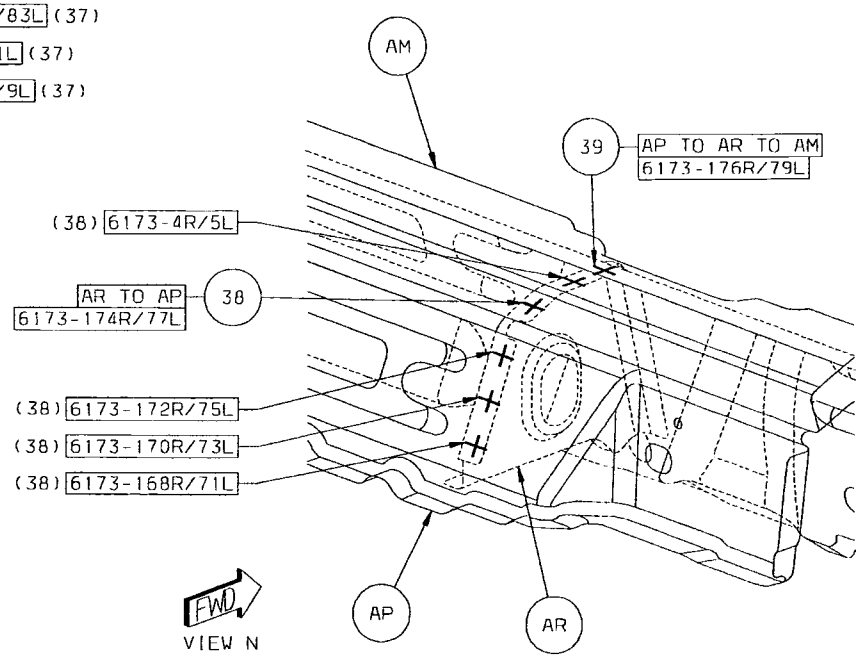

Back to Index

40 AS TO AT 1 PROJ WELD (SAF)
41 AT TO AD 15 S/WELDS (ORD)
42 AT TO AL 4/SD S/WELDS (ORD)
43 AT TO AL 5/SD S/WELDS (SAF)

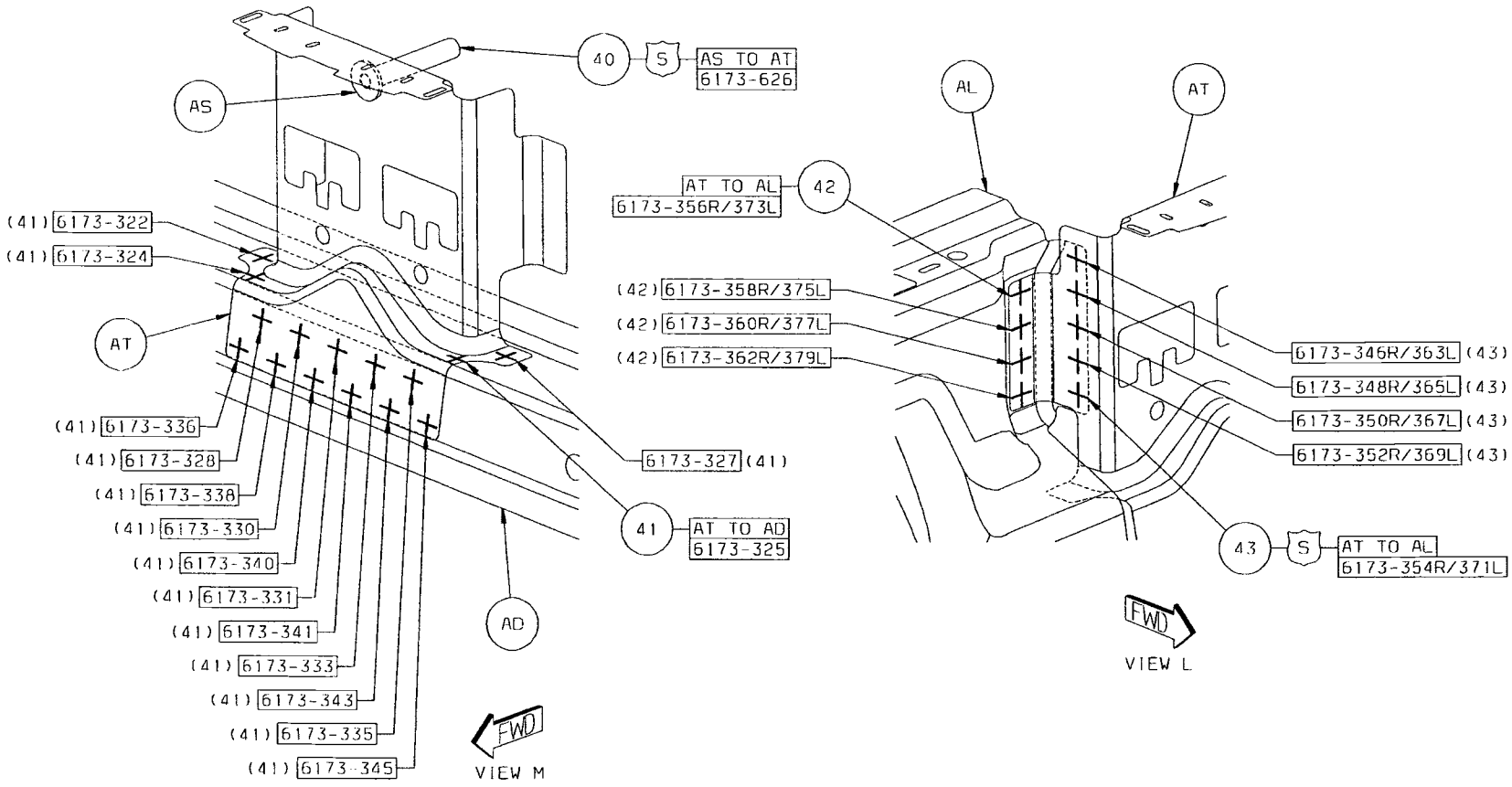

Back to Index

44 AV TO AL 1/SD S/WELD (ORD)
45 AL TO AU 15/SD S/WELDS (ORD)
46 AL TO AU 3/SD S/WELDS (SAF)

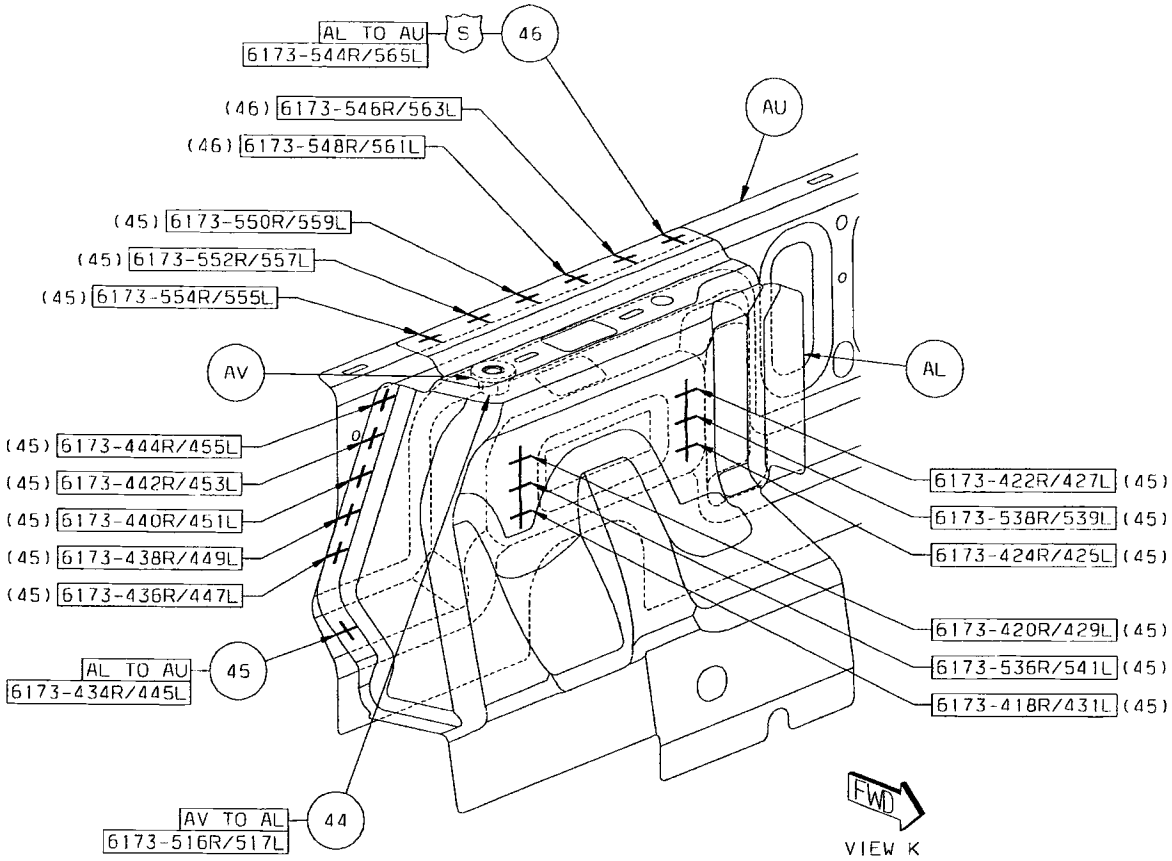

Back to Index

47 AD TO AF 26 S/WELDS (ORD)

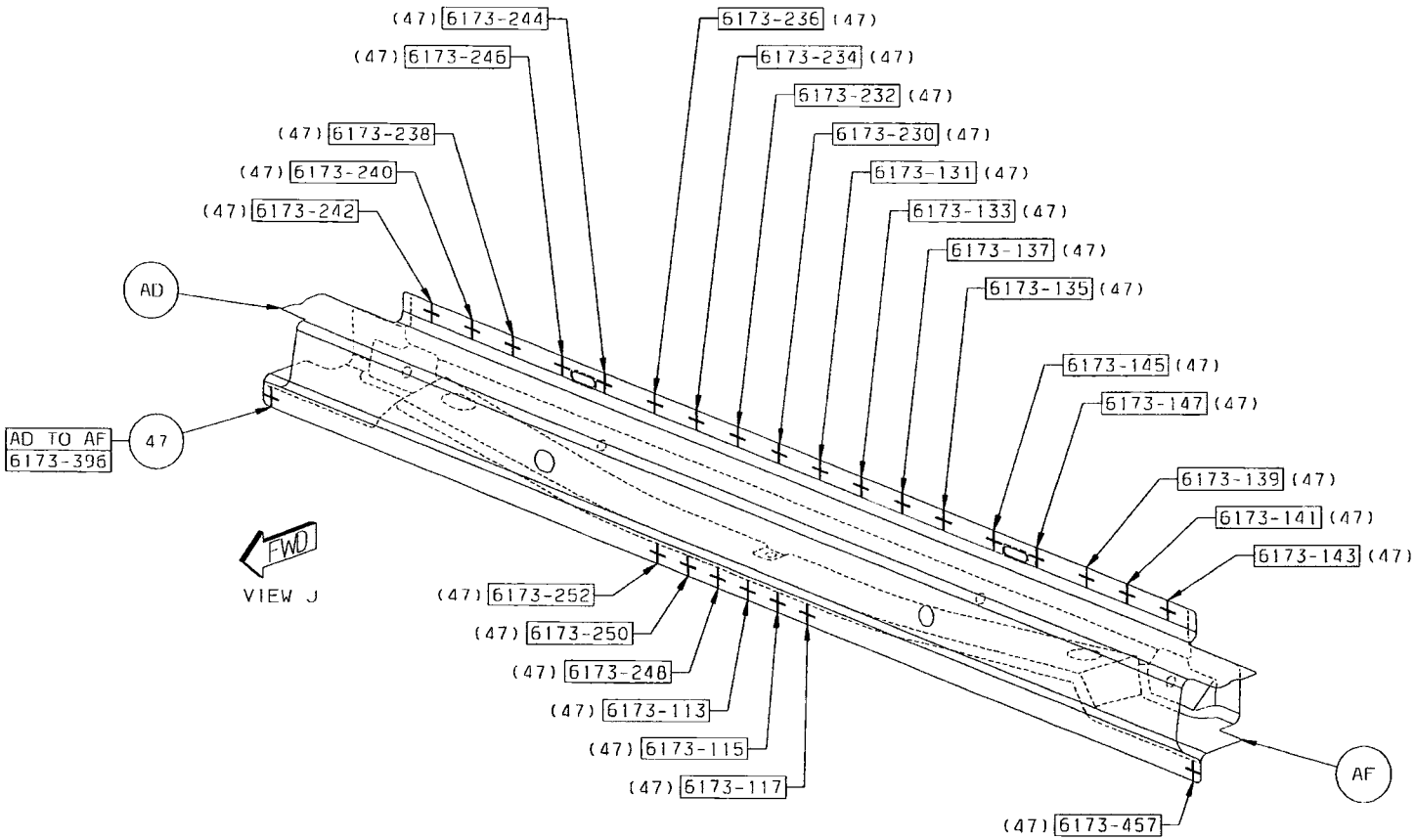

Back to Index

48 AW TO AF 4 PROJ WELDS (ORD)
49 AF TO AU 19 S/WELDS (ORD)

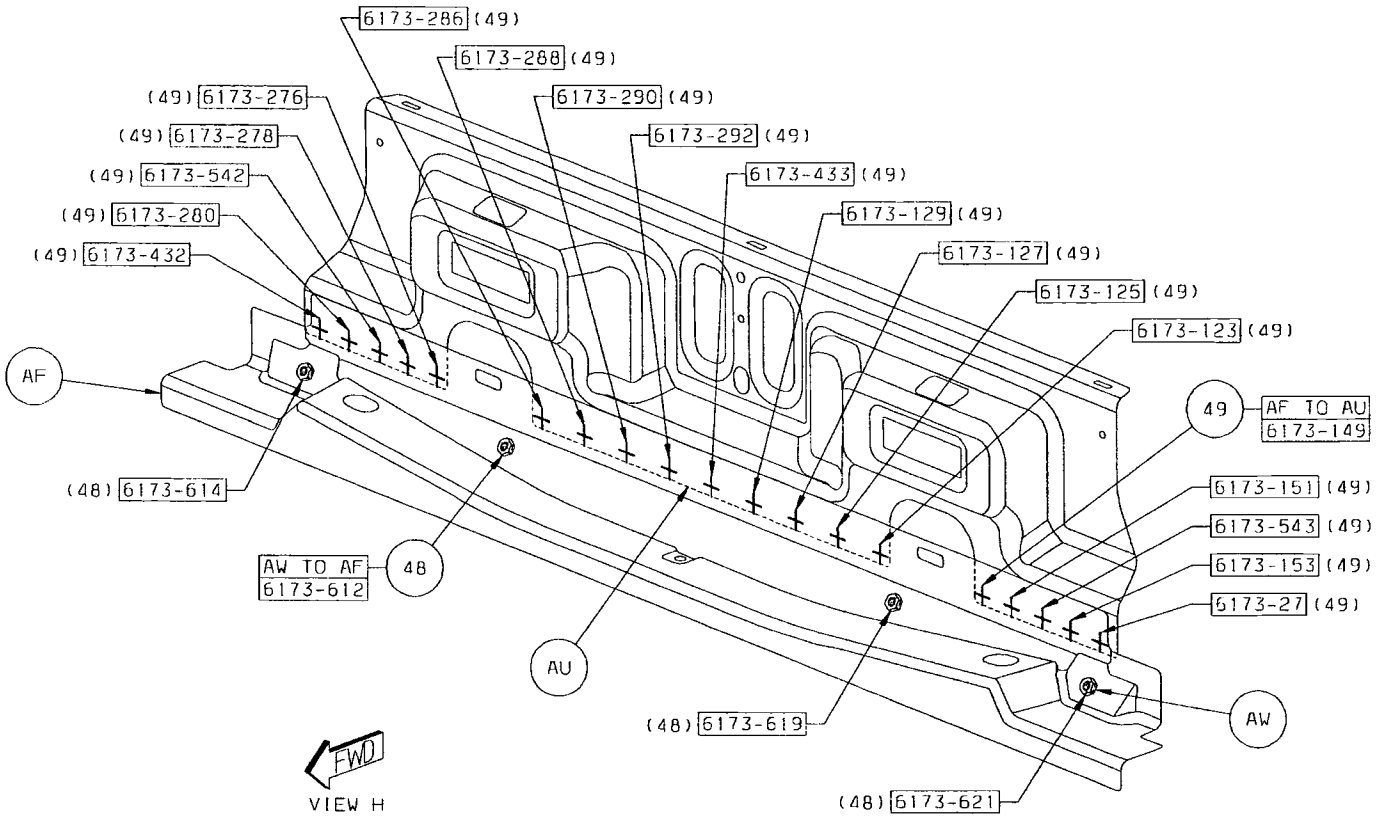

Back to Index

Sealer/Structural Adhesive/Sound Deadener/ Locations

Chrysler Sebring/Dodge Avenger

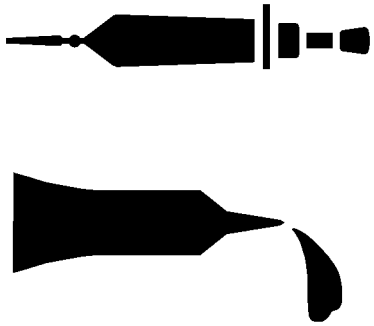

This section shows the different locations for Sealers, Sound Deadeners and Structural Adhesives and has been prepared for use by all body technicians involved in the repair of the Chrysler Sebring/Dodge Avenger.

Back to Index

Sealer/Structural Adhesive/Sound Deadener/ Locations

Chrysler Sebring Convertible

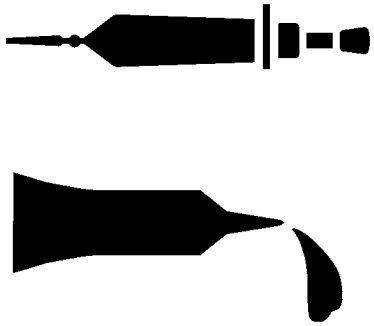

This section shows the different locations for Sealers, Sound Deadeners and Structural Adhesives and has been prepared for use by all body technicians involved in the repair of the Chrysler Sebring Convertible.

Back to Index

CHRYSLER SEBRING SIDEMEMBER ASSEMBLY SECTION

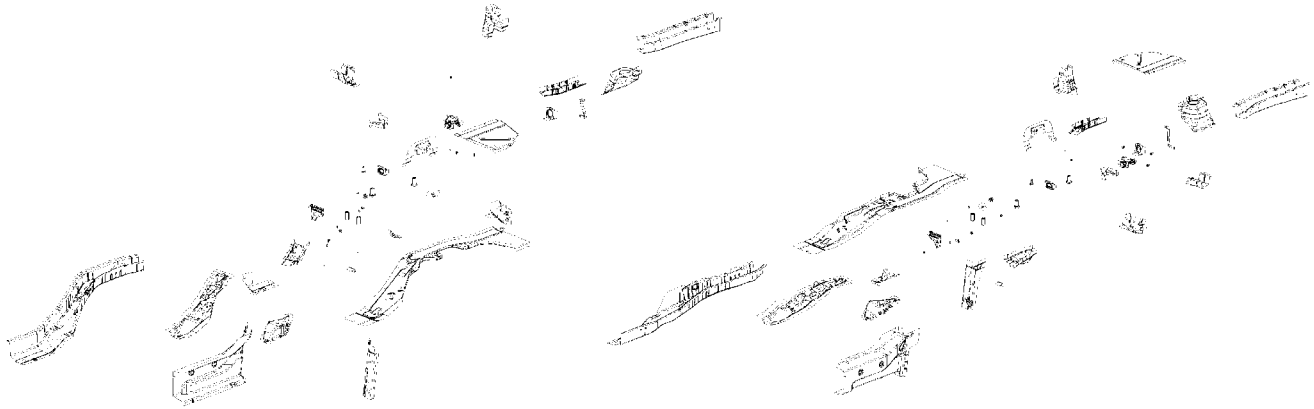

AA SIDEMEMBER – RR FLOOR LWR RT –
AA SIDEMEMBER – RR FLOOR LWR LT –
AB EXTENSION – RR FLOOR SIDEMEMBER RT –
AB EXTENSION – RR FLOOR SIDEMEMBER LT –
AC BULKHEAD – RR FLOOR SIDEMEMBER RT –
AC BULKHEAD – RR FLOOR SIDEMEMBER LT –
AD SILL – RR FLOOR SIDEMEMBER RT –
AD SILL – RR FLOOR SIDEMEMBER LT –
AE STUD.WELD/EXTERNAL – HEADER.PT.PNT.CUTTER.SPECIAL – FUEL TANK CLOSE OUT TO SILL EXT
AF SIDEMEMBER – RR FLOOR UPR RT –
AF SIDEMEMBER – RR FLOOR UPR LT –
AG SUPPORT – RR BUMPER RT –
AG SUPPORT – RR BUMPER LT –
AH TAPPING PLATE –
AH NUT – PIPE – FRT SUSPENSION TO BODY
AJ BRACKET – TRAILING ARM RT –
AJ BRACKET – TRAILING ARM LT –
AK BRACKET – PARKING BRAKE CABLE RR RT –
AK BRACKET – PARKING BRAKE CABLE RR LT –
AL NUT – PIPE – TRAILING ARM TO RR RAIL ASSY
AM NUT/WELD.HEX – NIBS.NO.FIN –SPARE TIRE TO RR FLOOR PAN
AN BRACKET – RR BRAKE HOSE
AN BRACKET – RR BRAKE HOSE
AP BRACKET – RR SUSPENSION FRT –
AP BRACKET – RR SUSPENSION FRT –
AR EXTENSION – RR FLOOR CROSSMEMBER FRT RT –
AR EXTENSION – RR FLOOR CROSSMEMBER FRT LT –
AS BULKHEAD – RR FLOOR SIDEMEMBER RT –
AS BULKHEAD – RR FLOOR SIDEMEMBER LT –
AT BULKHEAD – RR FLOOR SIDEMEMBER RT –
AT BULKHEAD – RR FLOOR SIDEMEMBER LT –
AU BRACKET – SPRING RR RT –
AU BRACKET – SPRING RR LT –
AV PANEL – SPRING RR –
AW REINF – SUSPENSION RR RT –
AW REINF – SUSPENSION RR LT
AX BRACKET – RR SUSPENSION RR RT –
AX BRACKET – RR SUSPENSION RR LT –
AY NUT/WELD.HEX – NO.FIN –
AZ EXTENSION – RR FLOOR SIDEMEMBER RT –
AZ EXTENSION – RR FLOOR SIDEMEMBER LT –
BA REINF – RR FLOOR SIDEMEMBER EXTENSION RT –
BA REINF – RR FLOOR SIDEMEMBER EXTENSION LT –
BB EXTENSION – RR FLOOR SIDEMEMBER RT –
BB EXTENSION – RR FLOOR SIDEMEMBER LT –
BC BRACKET – VAPOR CANISTER –
BC BRACKET – VAPOR CANISTER –
BD BRACKET – RR RAIL –
BE HOOK – MUFFLER HANGER BRACKET –
BF SPACER – RR FLOOR SIDEMEMBER EXTENSION – TRAILER HITCH ATTACH
BG SUPPORT ASSY – RR BUMPER RT –
BG SUPPORT ASSY – RR BUMPER LT –
BH BULKHEAD – RR FLOOR SIDEMEMBER EXTENSION RT –
BH BULKHEAD – RR FLOOR SIDEMEMBER EXTENSION LT –
BJ SPACER – RR FLOOR SIDEMEMBER EXTENSION – TRAILER HITCH ATTACH

Back to Index

PARTS IDENTIFICATION LEGEND, OVERVIEW 5

AA SIDEMEMBER – RR FLOOR LWR RT –
AA SIDEMEMBER – RR FLOOR LWR LT –
AB EXTENSION – RR FLOOR SIDEMEMBER RT –
AB EXTENSION – RR FLOOR SIDEMEMBER LT –
AC BULKHEAD – RR FLOOR SIDEMEMBER RT –
AC BULKHEAD – RR FLOOR SIDEMEMBER LT –
AD SILL – RR FLOOR SIDEMEMBER RT –
AD SILL – RR FLOOR SIDEMEMBER LT –
AE STUD.WELD/EXTERNAL – HEADER.PT.PNT.CUTTER.SPECIAL – FUEL TANK CLOSE OUT TO SILL EXT
AF SIDEMEMBER – RR FLOOR UPR RT –
AF SIDEMEMBER – RR FLOOR UPR LT –
AG SUPPORT – RR BUMPER RT –
AG SUPPORT – RR BUMPER LT –
AH TAPPING PLATE –
AH NUT – PIPE – FRT SUSPENSION TO BODY
AJ BRACKET – TRAILING ARM RT –
AJ BRACKET – TRAILING ARM LT –
AK BRACKET – PARKING BRAKE CABLE RR RT –
AK BRACKET – PARKING BRAKE CABLE RR LT –
AL NUT – PIPE – TRAILING ARM TO RR RAIL ASSY
AM NUT/WELD.HEX – NIBS.NO.FIN –SPARE TIRE TO RR FLOOR PAN
AN BRACKET – RR BRAKE HOSE
AN BRACKET – RR BRAKE HOSE
AP BRACKET – RR SUSPENSION FRT –
AP BRACKET – RR SUSPENSION FRT –
AR EXTENSION – RR FLOOR CROSSMEMBER FRT RT –
AR EXTENSION – RR FLOOR CROSSMEMBER FRT LT –
AS BULKHEAD – RR FLOOR SIDEMEMBER RT –
AS BULKHEAD – RR FLOOR SIDEMEMBER LT –
AT BULKHEAD – RR FLOOR SIDEMEMBER RT –
AT BULKHEAD – RR FLOOR SIDEMEMBER LT –
AU BRACKET – SPRING RR RT –
AU BRACKET – SPRING RR LT –
AV PANEL – SPRING RR –
AW REINF – SUSPENSION RR RT –
AW REINF – SUSPENSION RR LT
AX BRACKET – RR SUSPENSION RR RT –
AX BRACKET – RR SUSPENSION RR LT –
AY NUT/WELD.HEX – NO.FIN –
AZ EXTENSION – RR FLOOR SIDEMEMBER RT –
AZ EXTENSION – RR FLOOR SIDEMEMBER LT –
BA REINF – RR FLOOR SIDEMEMBER EXTENSION RT –
BA REINF – RR FLOOR SIDEMEMBER EXTENSION LT –
BB EXTENSION – RR FLOOR SIDEMEMBER RT –
BB EXTENSION – RR FLOOR SIDEMEMBER LT –
BC BRACKET – VAPOR CANISTER –
BC BRACKET – VAPOR CANISTER –
BD BRACKET – RR RAIL –
BE HOOK – MUFFLER HANGER BRACKET –
BF SPACER – RR FLOOR SIDEMEMBER EXTENSION – TRAILER HITCH ATTACH
BG SUPPORT ASSY – RR BUMPER RT –
BG SUPPORT ASSY – RR BUMPER LT –
BH BULKHEAD – RR FLOOR SIDEMEMBER EXTENSION RT –
BH BULKHEAD – RR FLOOR SIDEMEMBER EXTENSION LT –
BJ SPACER – RR FLOOR SIDEMEMBER EXTENSION – TRAILER HITCH ATTACH

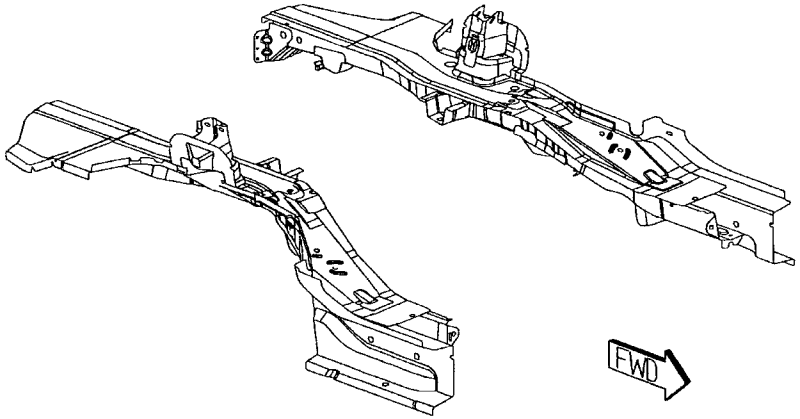

Back to Index

WELD LAYOUT LOCATION GUIDE

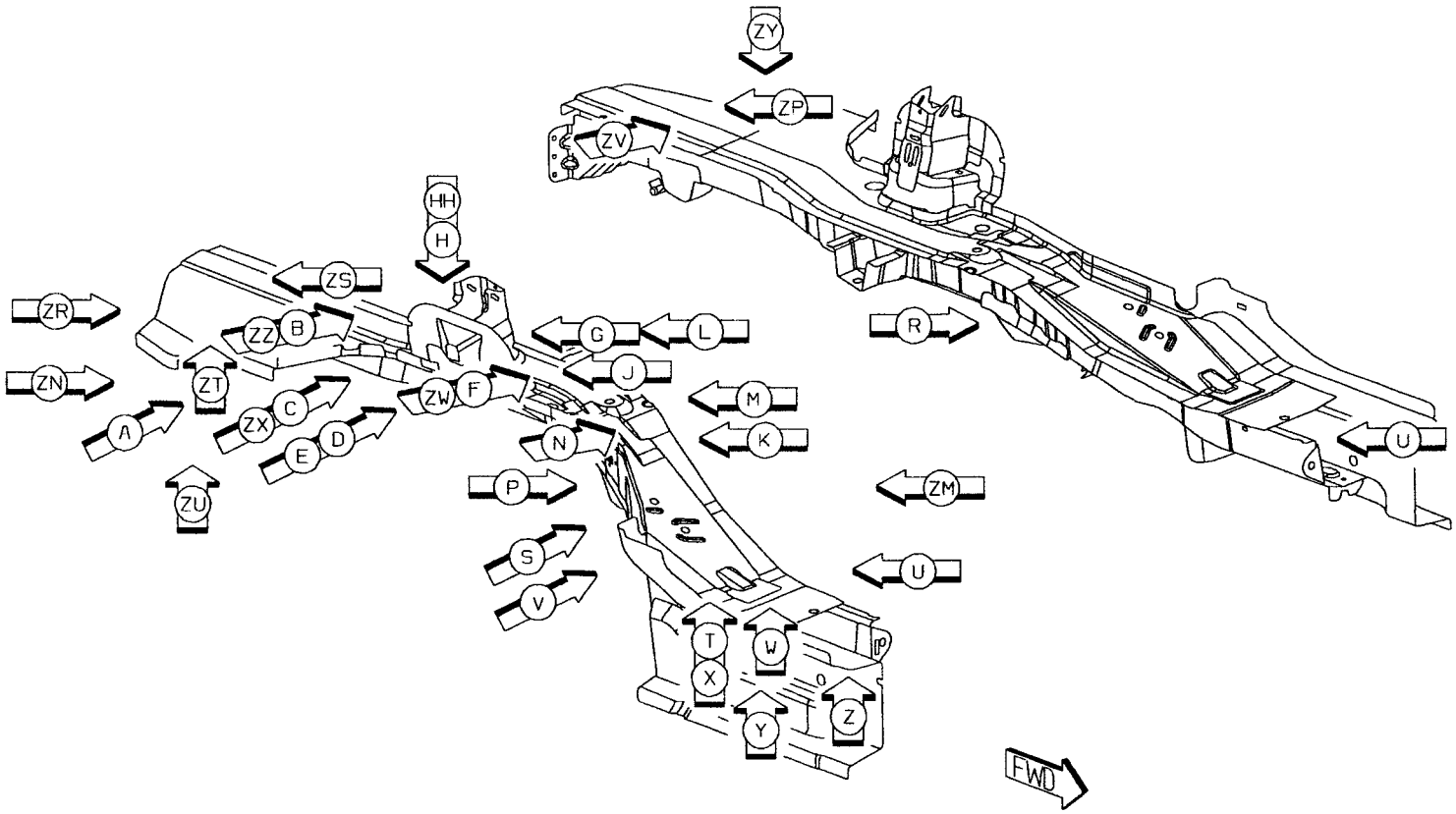

Back to Index

01 AB TO AA 7/SD S/WELDS (ORD)
02 AC TO AB TO AA 1/SD S/WELD (ORD)
03 AE TO AA 1/SD S/WELD (ORD)
04 AD TO AA 12/SD S/WELDS (ORD)

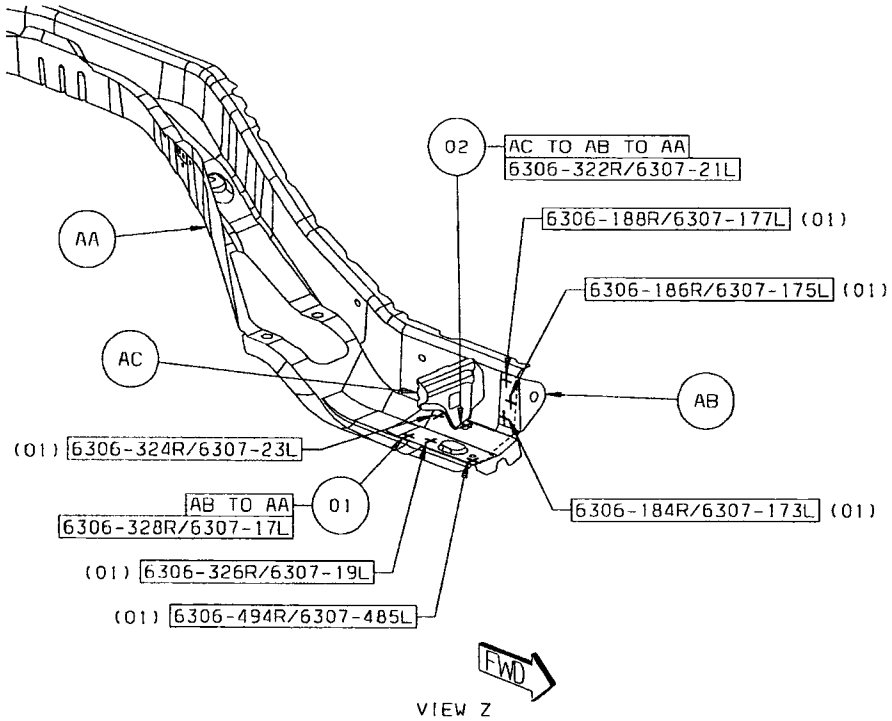

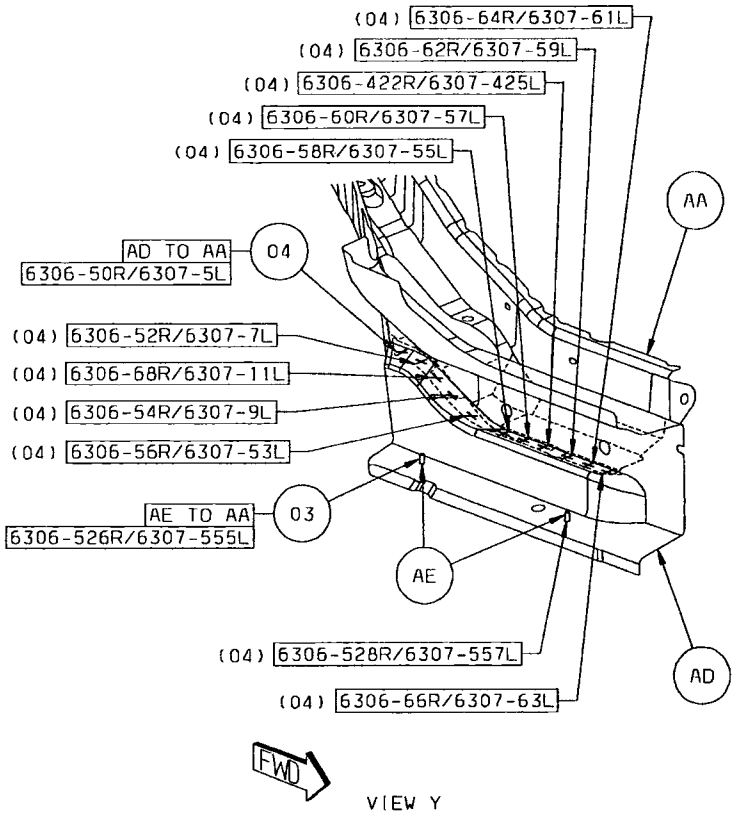

Back to Index

05 AF TO AA 2/SD S/WELDS (CRT)
06 AH TO AF 4/SD S/WELDS (ORD)
07 AF TO AA 7/SD S/WELDS (ORD)
08 AE TO AF 2/SD S/WELDS (ORD)
09 AF TO AD 3/SD S/WELDS (ORD)
10 AG TO AF TO AA 11/SD S/WELDS (CRT)

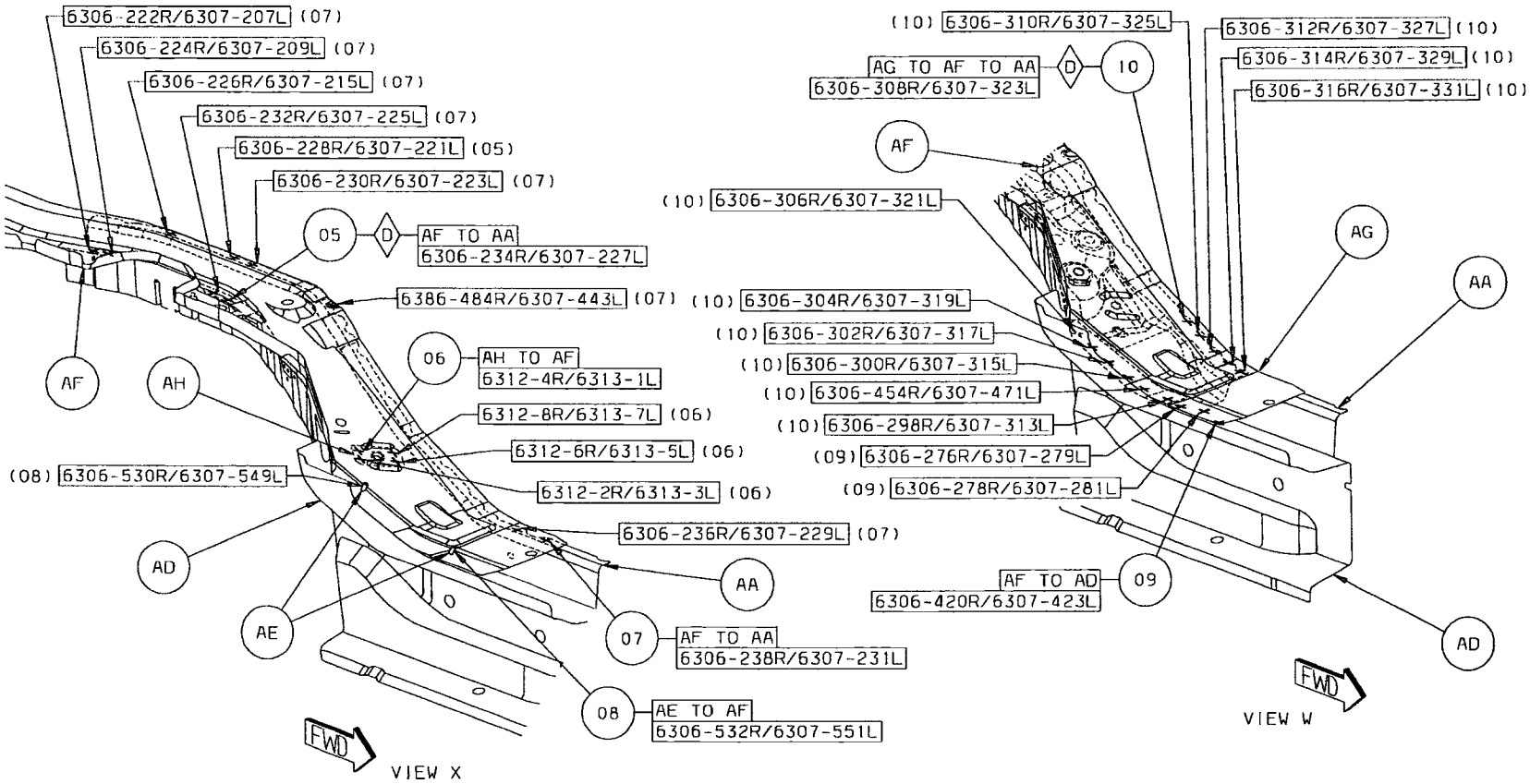

Back to Index

11 AM TO AA TO AJ 2/SD S/WELD (CRT)
12 AL TO AJ 4/SD FCAW
13 AJ TO AA 12R/13L S/WELDS (CRT)
14 AK TO AA TO AJ 1R S/WELD (CRT)
15 AK TO AA 1R/2L S/WELDS (CRT)
16 AM TO AG 1/SD PROJ WELD
17 AJ TO AG 2/SD S/WELDS (CRT)

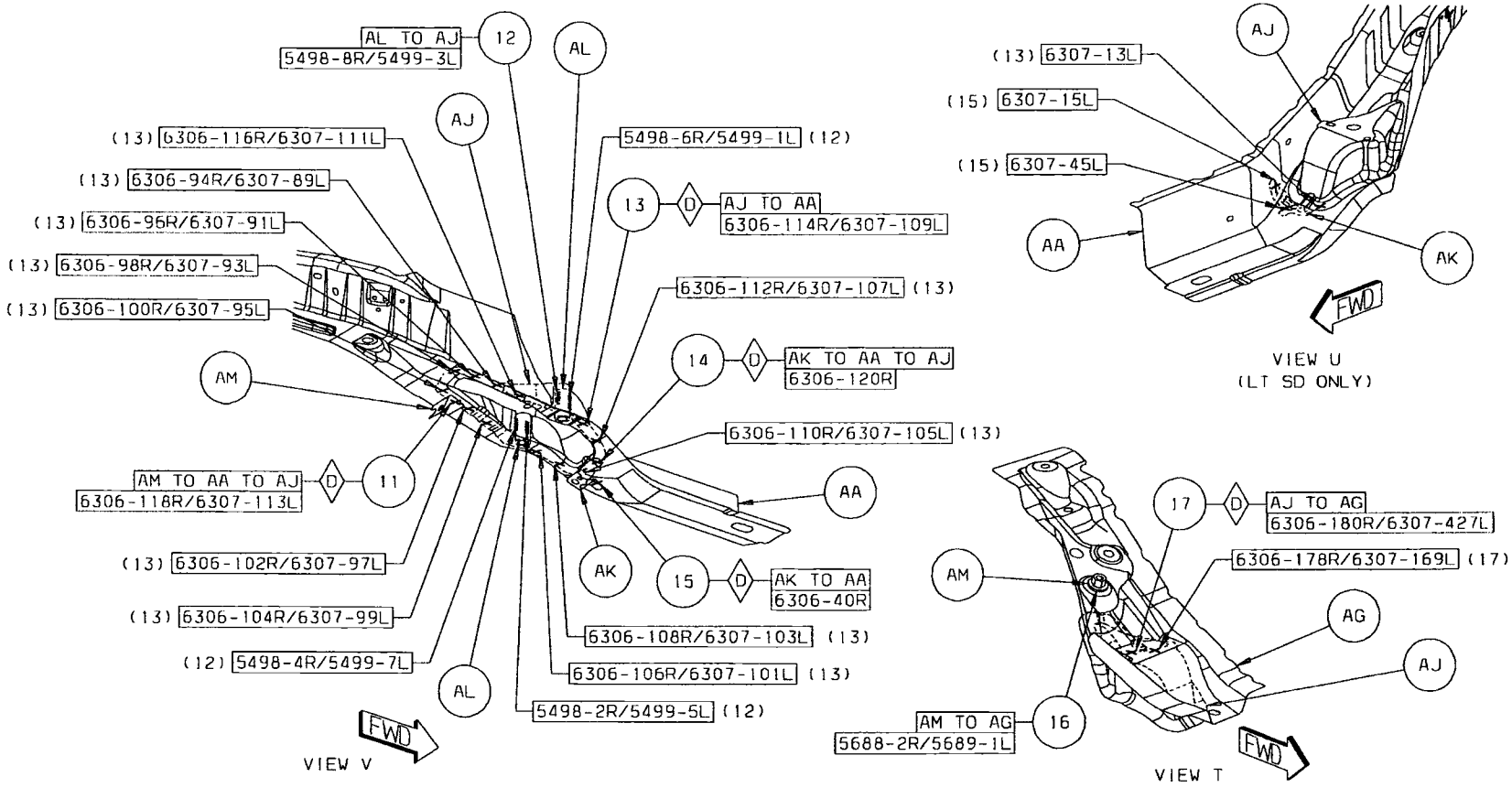

Back to Index

18 AN TO AA 1/SD S/WELD (CRT)
19 AF TO AG TO AA 5/SD S/WELDS (CRT)
20 AP TO AA 5/SD S/WELDS (CRT)
21 AF TO AA TO AD 3/SD S/WELDS (CRT)
22 AD TO AA 2/SD S/WELDS (ORD)
23 AE TO AA 1L PROJ WELD

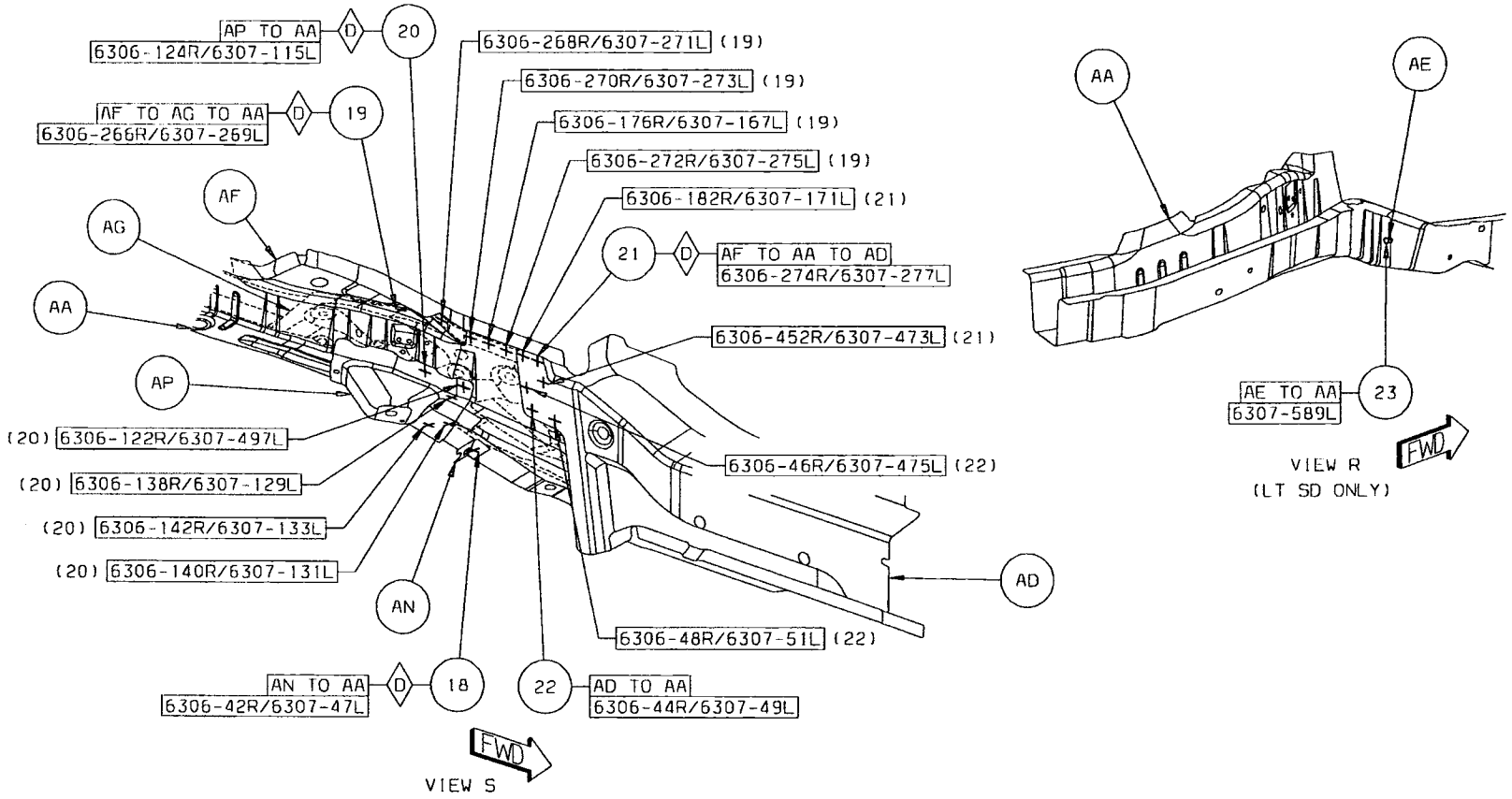

Back to Index

24 AF TO AG TO AA 6/SD S/WELDS (CRT)
25 AG TO AA 3/SD S/WELDS (CRT)
26 AP TO AA 6/SD S/WELDS (CRT)
27 AS TO AA 4/SD S/WELDS (ORD)
28 AF TO AG TO AA 2/SD S/WELDS (CRT)
29 AR TO AA 4/SD S/WELDS (ORD)

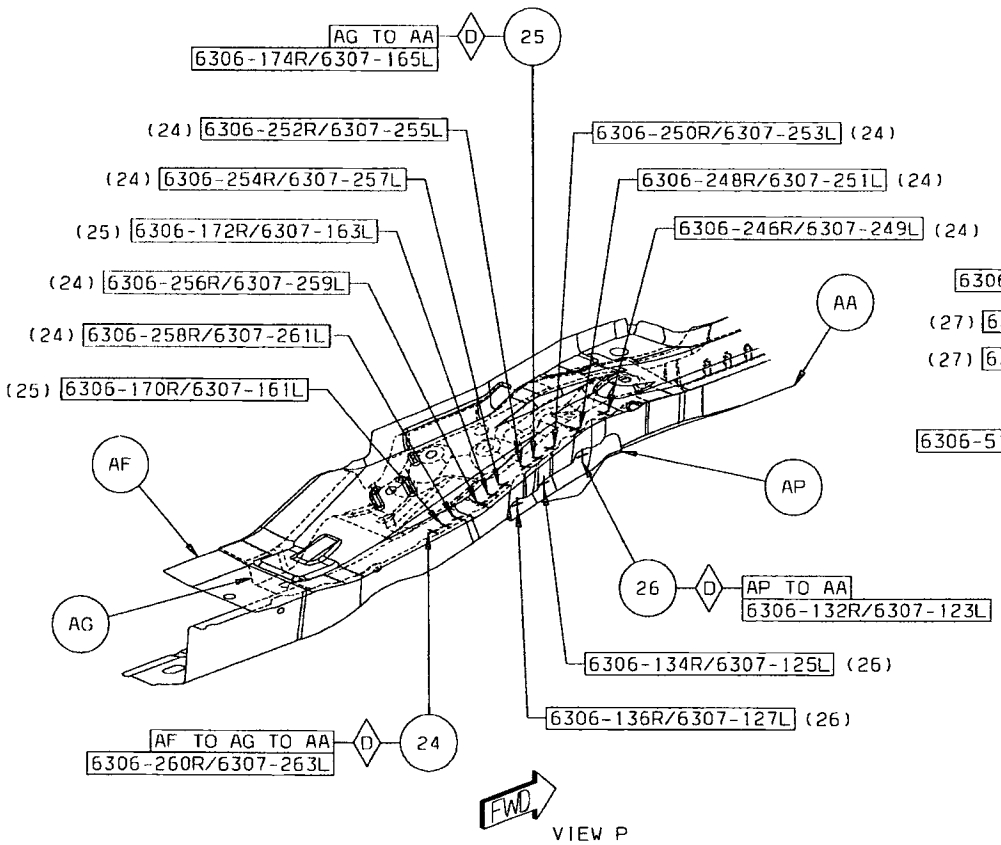

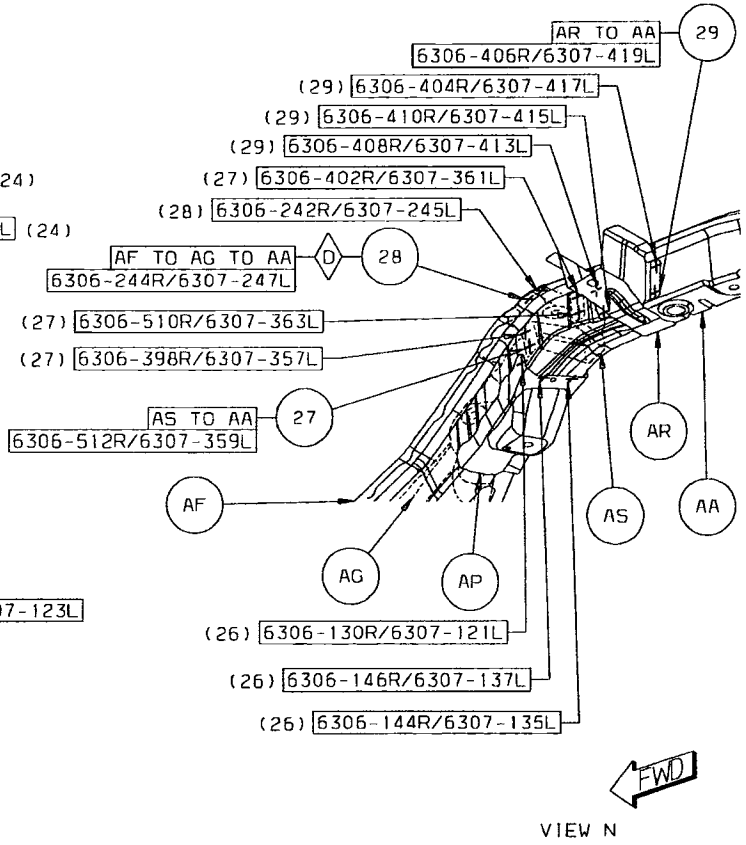

Back to Index

30 AT TO AA 3/SD S/WELDS (ORD)
31 AS TO AA 2/SD S/WELDS (ORD)
32 AP TO AA 2/SD S/WELDS (ORD)
33 AR TO AA 1/SD S/WELD (ORD)
34 AT TO AA TO AU 3/SD S/WELDS (CRT)
35 AU TO AA 7/SD S/WELDS (CRT)
36 AF TO AG TO AA 2/SD S/WELDS (CRT)
37 AF TO AA TO AR 2/SD S/WELDS (ORD)

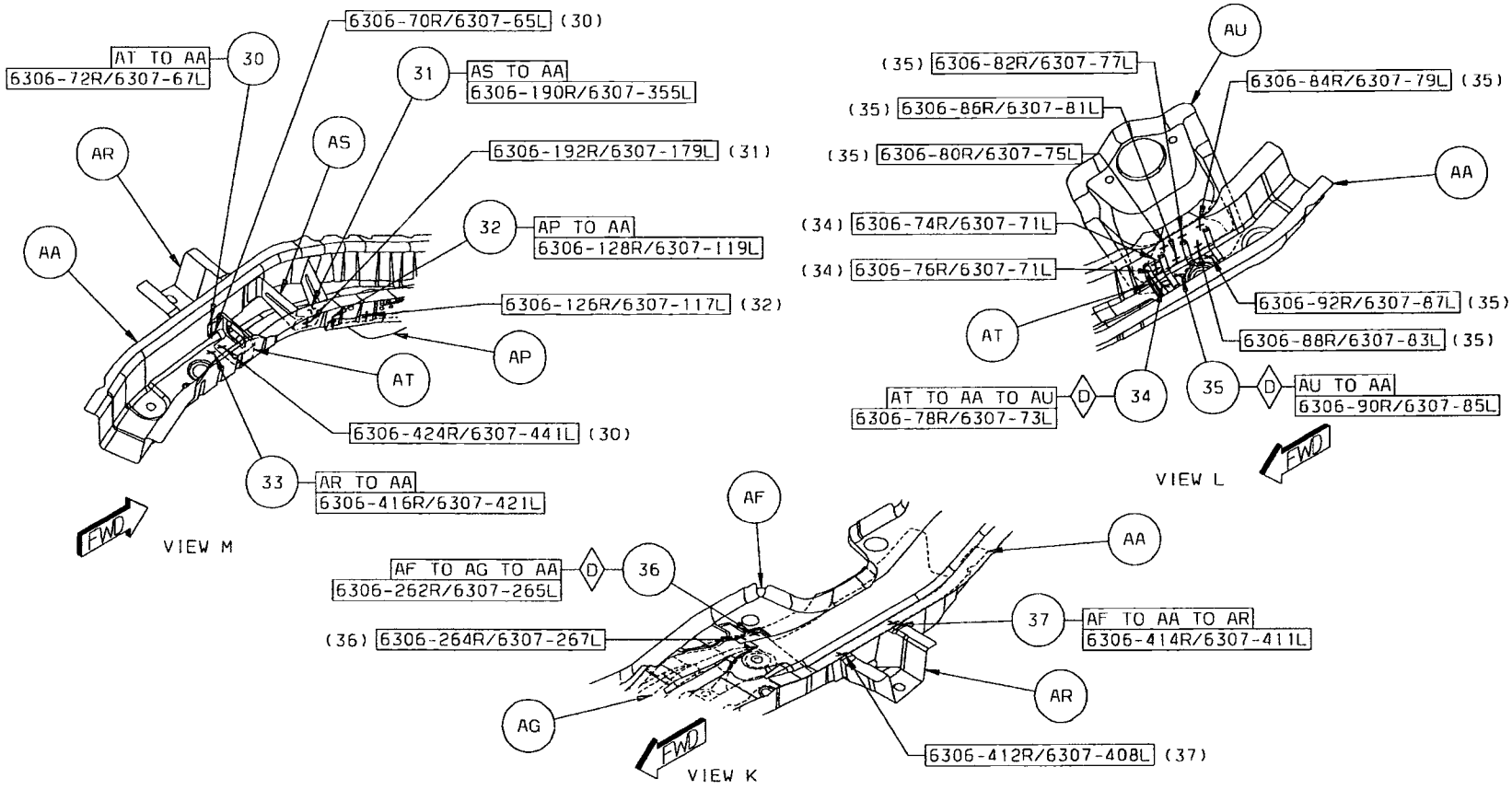

Back to Index

38 AU TO AF 4/SD S/WELDS (CRT)
39 AV TO AU TO AF 3/SD S/WELDS (CRT)
40 AV TO AU 3/SD S/WELDS (CRT)
41 AV TO AW 2/SD S/WELDS (CRT)
42 AW TO AU TO AV 1/SD S/WELD (CRT)
43 AW TO AU 6/SD S/WELDS (CRT)
44 AU TO AA TO AF 3/SD S/WELDS (CRT)

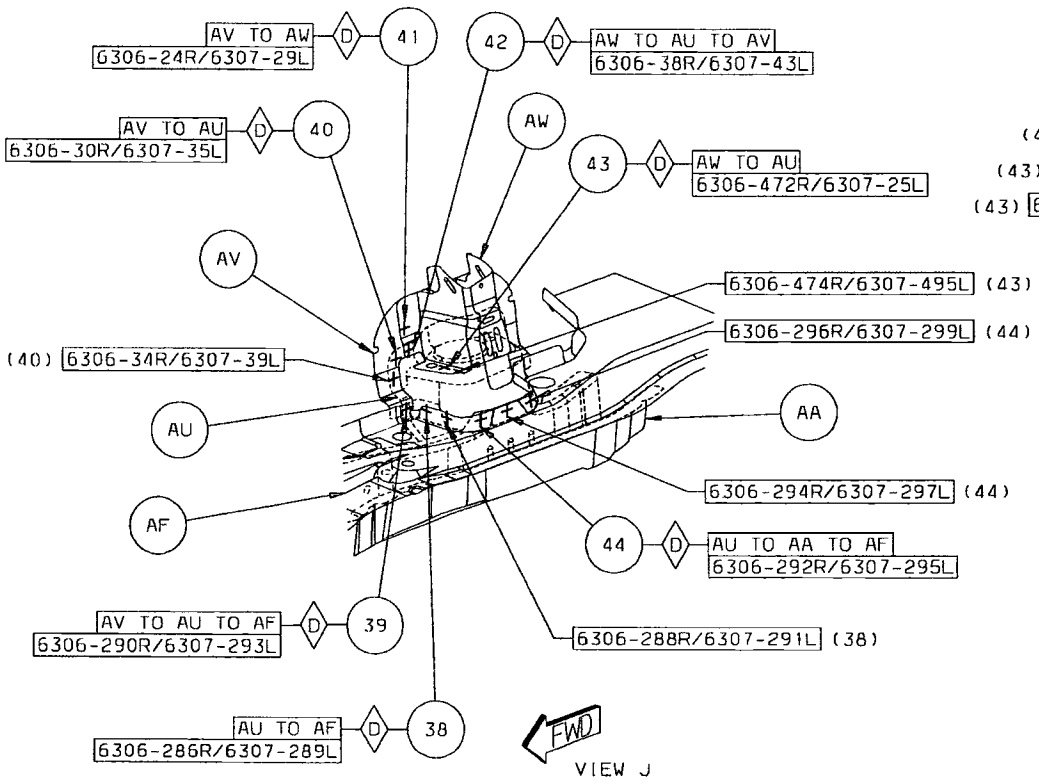

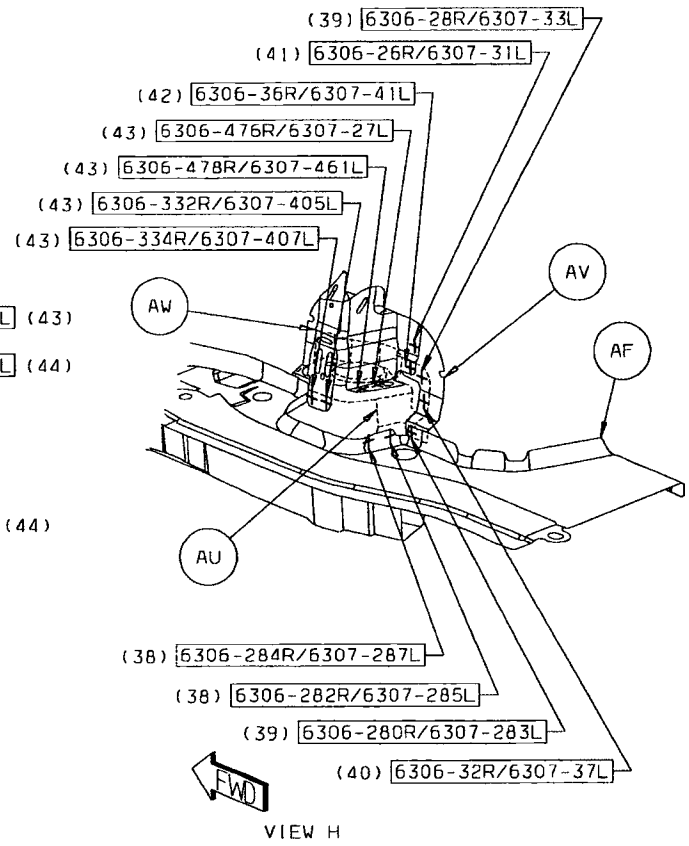

Back to Index

45 AV TO AU 3/SD S/WELDS (ORD)
46 AE TO AF 1/SD PROJ WELD
47 AX TO AA 6/SD S/WELDS (CRT)
48 AX TO AA 3/SD S/WELDS (CRT)
49 AF TO AA 2/SD S/WELDS (ORD)
50 AY TO AA 1/SD S/WELD (ORD)

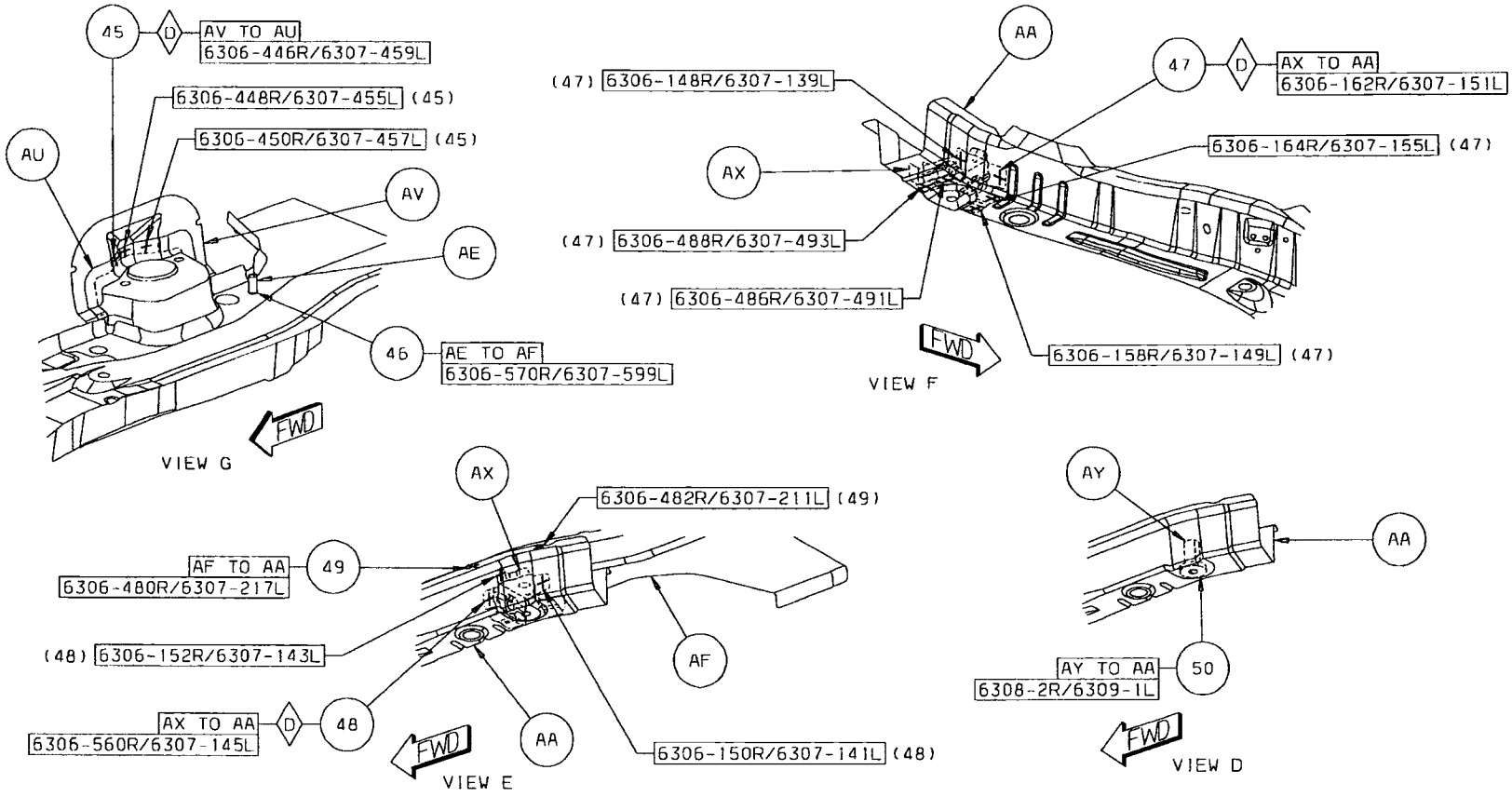

Back to Index

51 BA TO AZ 6/SD S/WELDS (ORD)
52 AZ TO AF 7/SD S/WELDS (ORD)
53 AE TO AF 1/SD PROJ WELD
54 AZ TO AA TO AF 5/SD S/WELDS (CRT)
55 AZ TO AA 3/SD S/WELDS (ORD)
56 AZ TO AA TO BA 6/SD S/WELDS (ORD)

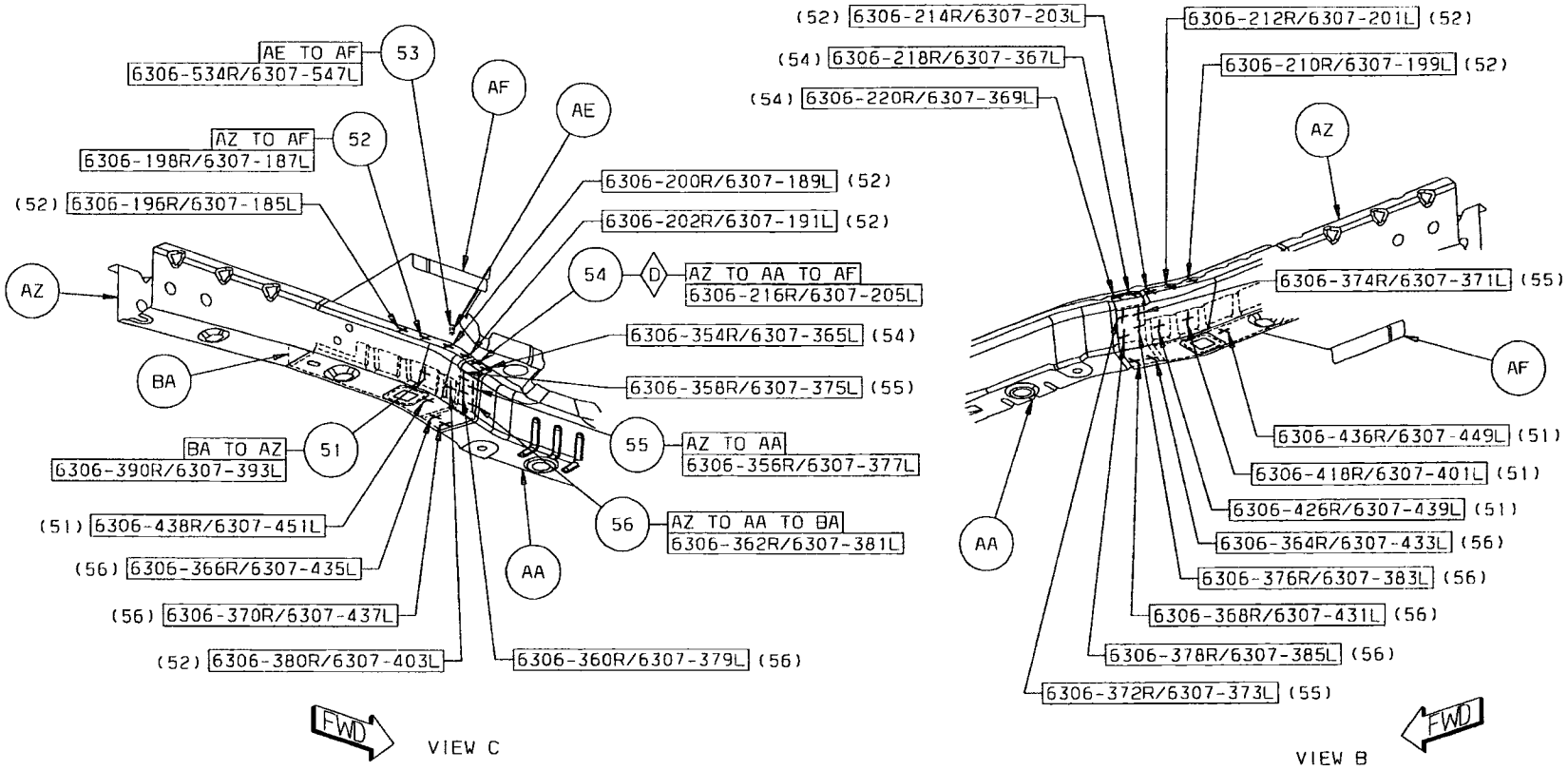

Back to Index

57 BA TO AZ 8/SD S/WELDS (ORD)
58 AA TO AF TO BB 2/SD S/WELDS (ORD)
59 BB TO AF 5/SD S/WELDS (ORD)
60 AE TO AF 3/SD PROJ WELD
61 AF TO AZ 6/SD S/WELDS (ORD)
62 BC TO AF 2/SD S/WELDS (ORD)
63 AF TO AZ TO BC 2/SD S/WELDS (ORD)
64 BC TO AZ 1/SD S/WELD (ORD)

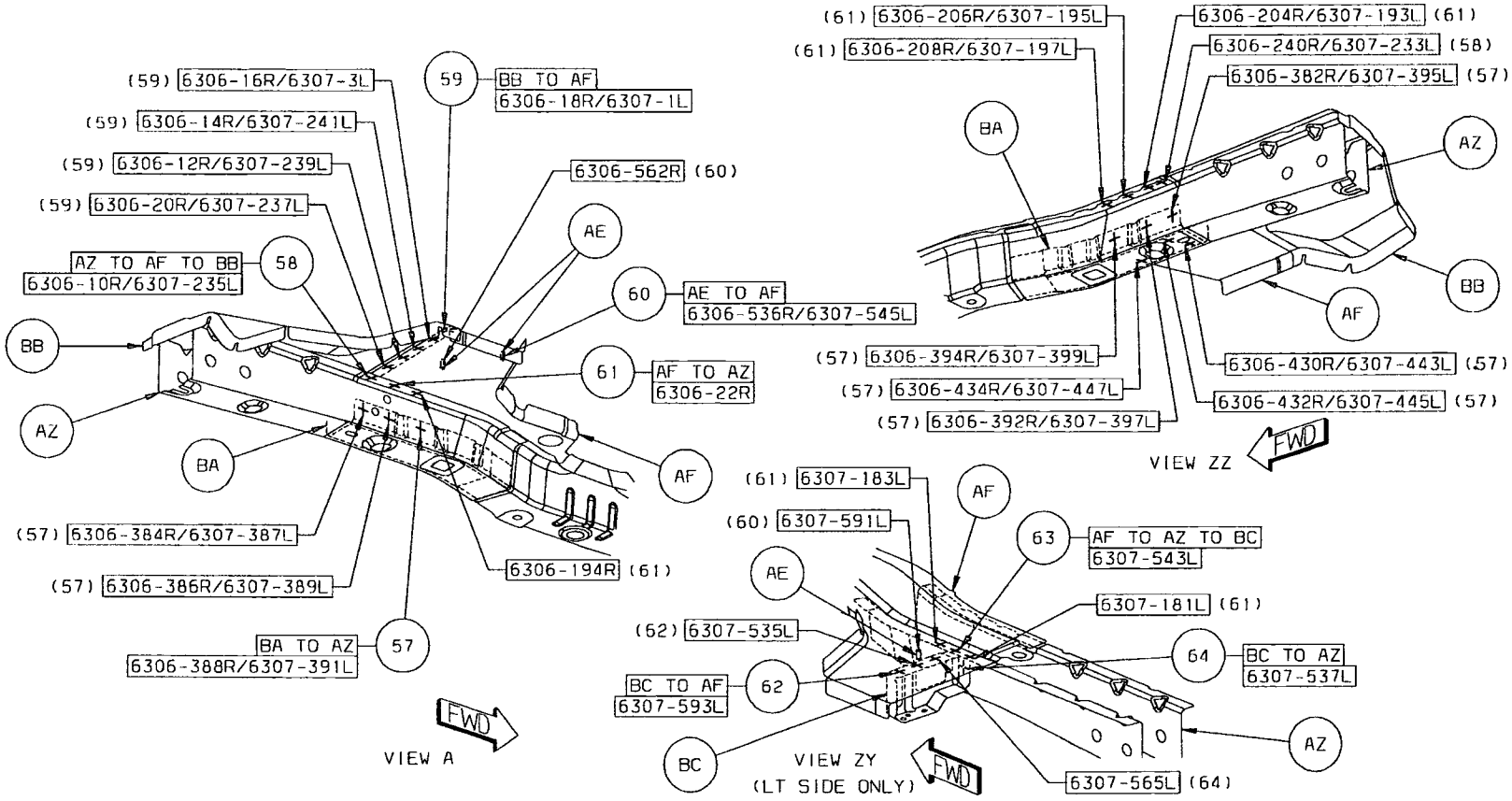

Back to Index

65 BE TO AZ 4/SD S/WELDS (ORD)
66 BD TO AZ 10/SD S/WELDS (ORD)
67 AE TO BB 5/SD PROJ WELD
68 BF TO BB 2/SD S/WELDS (ORD)
69 BF TO AZ TO BB 1/SD S/WELD (ORD)
70 BF TO AZ 2/SD S/WELDS (ORD)
71 BB TO AZ 8R/7L S/WELDS (ORD)

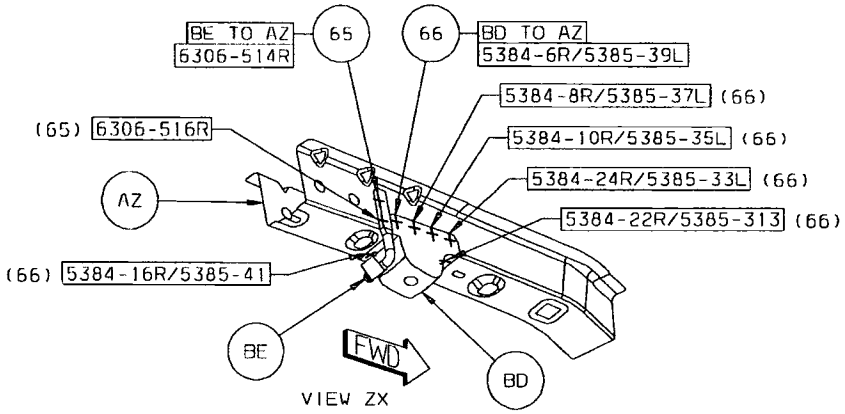

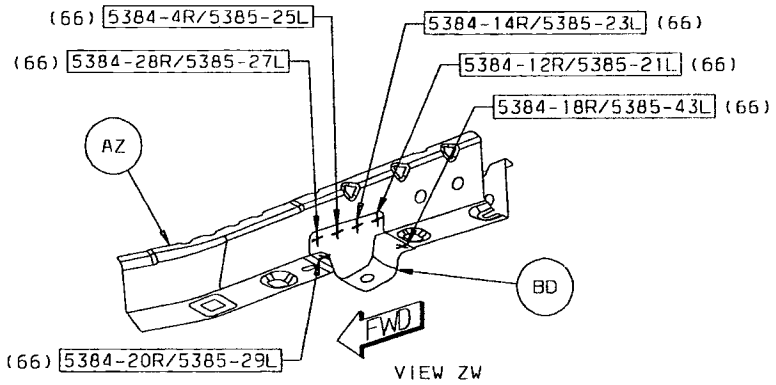

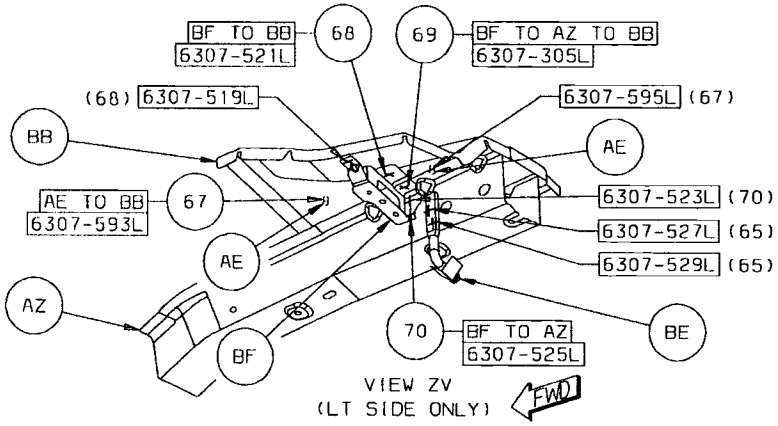

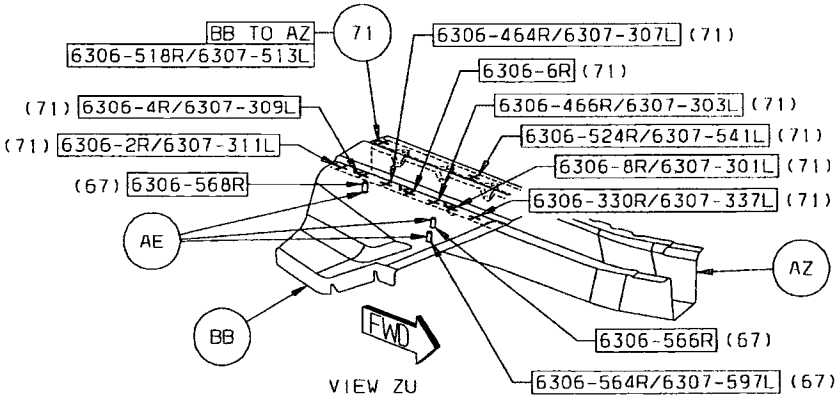

Back to Index

72 BH TO AZ 3/SD S/WELDS (ORD)
73 BG TO AZ 5/SD S/WELDS (ORD)
74 BH TO BG TO AZ 2/SD S/WELDS (ORD)

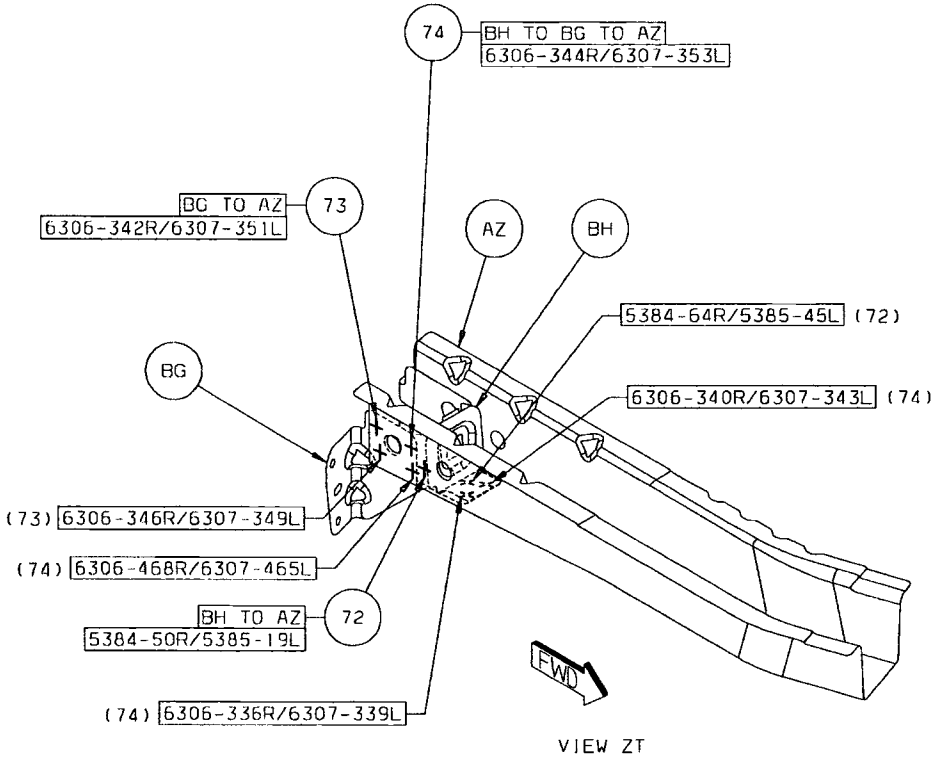

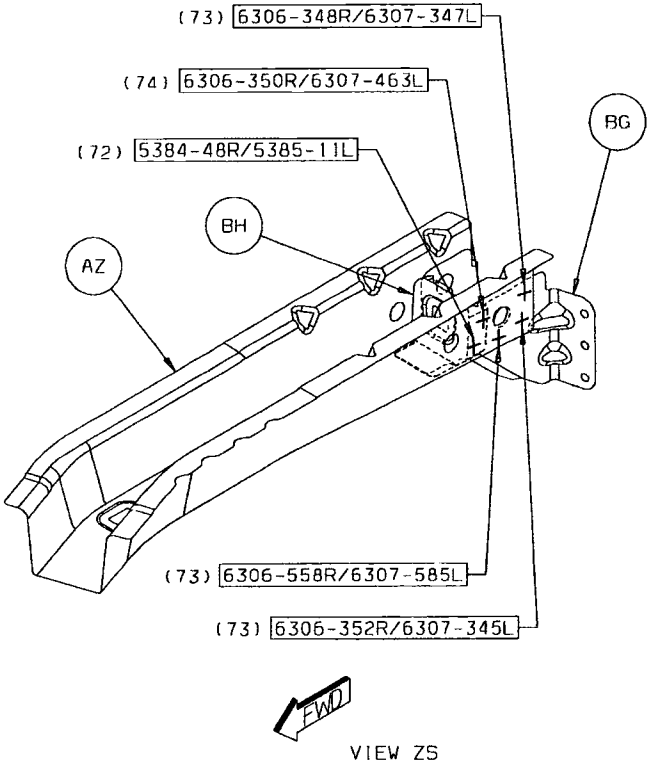

Back to Index

75 AY TO AX 1/SD FCAW
76 BE TO AZ 2/SD FCAW
77 BJ TO AZ 4/SD FCAW
78 AX TO AA 2/SD FCAW
79 AY TO AA 2/SD FCAW
80 AD TO AA 1/SD FCAW

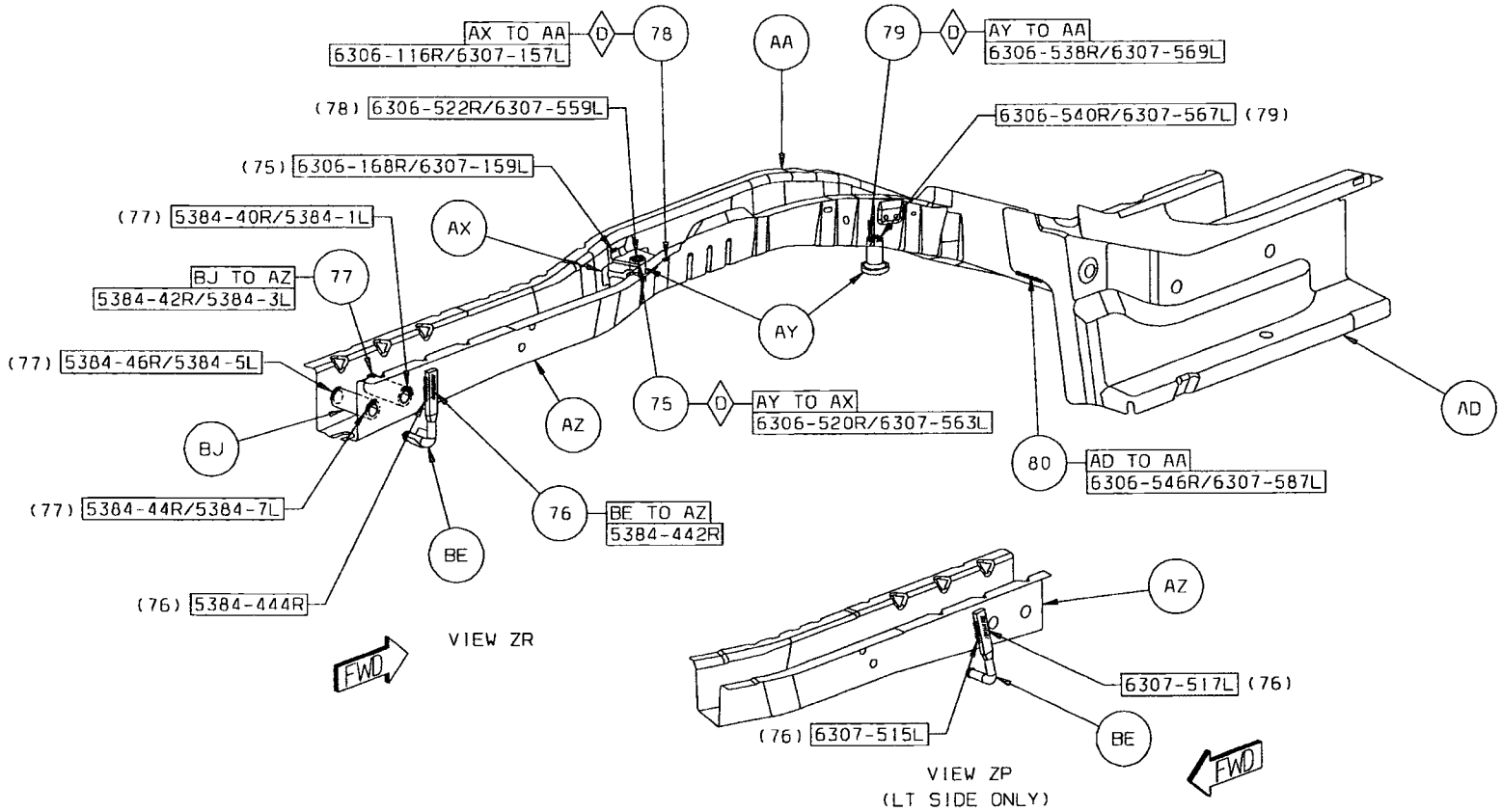

Back to Index

81 BB TO AF 1/SD STRUC ADH
82 AU TO AV 1/SD STRUC ADH
83 AD TO AA TO AF 1/SD STRUC ADH
84 AD TO AG TO AF 1/SD STRUC ADH
85 AD TO AA 1/SD STRUC ADH
86 AU TO AA 1/SD STRUC ADH
87 AU TO AA 1/SD STRUC ADH

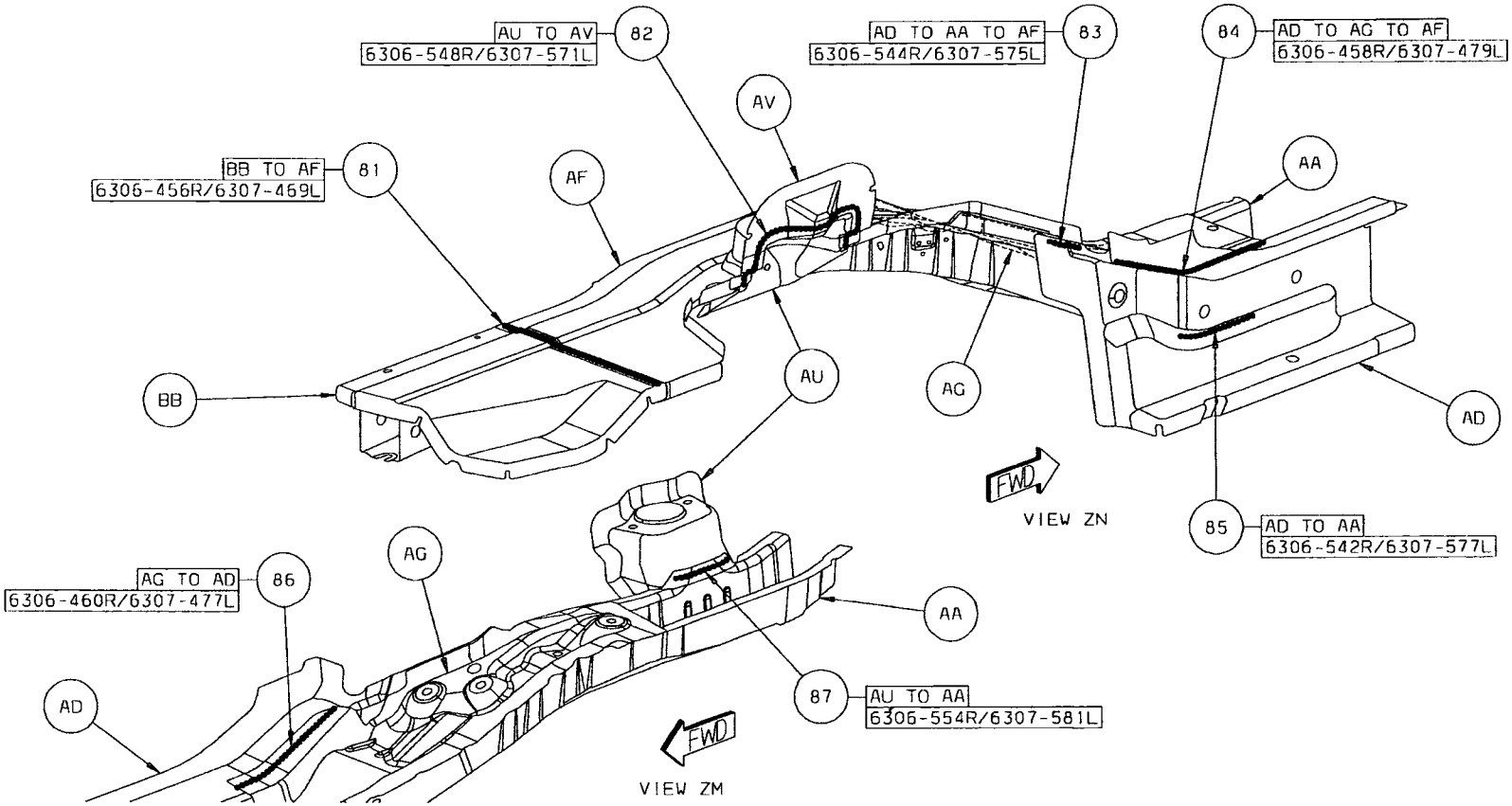

Back to Index

CHRYSLER SEBRING/DODGE AVENGER SIDEMEMBER ASSEMBLY (COMMON) SECTION

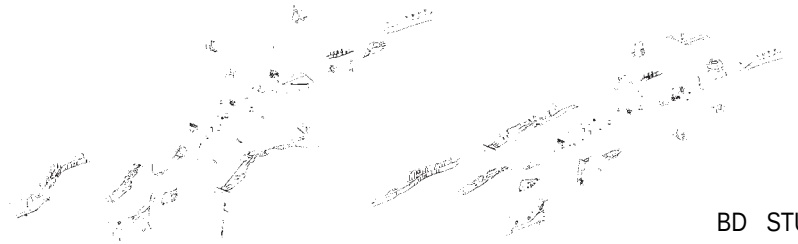

AA SIDEMEMBER – RR FLOOR LWR RT –
AA SIDEMEMBER – RR FLOOR LWR LT –
AB SIDEMEMBER – RR FLOOR UPR RT –
AB SIDEMEMBER – RR FLOOR UPR LT –
AC REINF – SUSPENSION RR RT –
AC REINF – SUSPENSION RR LT –
AD BRACKET – SPRING RR RT –
AD BRACKET – SPRING RR LT –
AE PANEL – SPRING RR –
AE PANEL – SPRING RR –
AF EXTENSION – RR FLOOR CROSSMEMBER FRT RT–
AF EXTENSION – RR FLOOR CROSSMEMBER FRT LT– NONE
AG AIR BAFFLE – COWL SIDE TO PLENUM RT –
AG AIR BAFFLE – COWL SIDE TO PLENUM LT –
AH BULKHEAD – RR FLOOR SIDEMEMBER RT –
AH BULKHEAD – RR FLOOR SIDEMEMBER LT –
AJ BRACKET – RR SUSPENSION RR RT –
AJ BRACKET – RR SUSPENSION RR LT –
AK REINF – RR FLOOR SIDEMEMBER RT –
AK REINF – RR FLOOR SIDEMEMBER LT –
AL SILL – RR FLOOR SIDEMEMBER RT –
AL SILL – RR FLOOR SIDEMEMBER LT –
AM PLATE – SIDE SILL RT –
AM PLATE – SIDE SILL LT –
AN BULKHEAD – RR FLOOR SIDEMEMBER RT –
AN BULKHEAD – RR FLOOR SIDEMEMBER LT –
AP BRACKET – RR BRAKE HOSE –
AP BRACKET – RR BRAKE HOSE –
AR BRACKET – TRAILING ARM RT –
AR BRACKET – TRAILING ARM LT –
AS EXTENSION – RR FLOOR SIDEMEMBER RT –
AS EXTENSION – RR FLOOR SIDEMEMBER LT –
AT BRACKET – PARKING BRAKE CABLE RR RT –
AT BRACKET – PARKING BRAKE CABLE RR LT –
AU BRACKET – RR SUSPENSION FRT –
AU BRACKET – RR SUSPENSION FRT –
AV EXTENSION – RR FLOOR SIDEMEMBER RT –
AV EXTENSION – RR FLOOR SIDEMEMBER LT –
AW REINF – RR FLOOR SIDEMEMBER EXTENSION RT –
AW REINF – RR FLOOR SIDEMEMBER EXTENSION LT –
AX EXTENSION – RR FLOOR SIDEMEMBER RT –
AX EXTENSION – RR FLOOR SIDEMEMBER LT –
AY SUPPORT – RR BUMPER RT –
AY SUPPORT – RR BUMPER LT –
AZ BULKHEAD – RR FLOOR SIDEMEMBER EXTENSION RT –
AZ BULKHEAD – RR FLOOR SIDEMEMBER EXTENSION LT –
BA HOOK – MUFFLER HANGER BRACKET –
BA HOOK – MUFFLER HANGER BRACKET –
BB NUT – PIPE – RR SUSP TO RR RAIL ASSY
BB NUT – PIPE – RR SUSP TO RR RAIL ASSY
BB NUT – PIPE – RR SUSP TO RR RAIL ASSY
BB NUT – PIPE – RR SUSP TO RR RAIL ASSY
BC STUD.WELD/EXTERNAL – PNT.CUTTER.PILOT.PT.SPECIAL – FUEL COOLER TO FRT FLR PAN
BD STUD.WELD/EXTERNAL – HEADER.PT.PNT.CUTTER.SPECIAL – FUEL TANK CLS OUT TO RR RAIL ASSY
BD STUD.WELD/EXTERNAL – HEADER.PT.PNT.CUTTER.SPECIAL – QTR INR REINF BRKT TO RR RAIL ASSY
BD STUD.WELD/EXTERNAL – HEADER.PT.PNT.CUTTER.SPECIAL – GUSSET TO EXTENSION RR FLOOR
BE TAPPING PLATE – RR RESISTANT TO RR RAIL ASSY
BF STUD.WELD/INTERNAL – HEADER.PT.NIBS.NO.FIN – RR SEAT TO RR RAIL
BG NUT.WELD/HEX – NIBS.NO.FIN – RR SEAT TO RR RAIL
BH NUT.WELD.HEX – NO.FIN – BRAKE HOSE TO BRKT
BH NUT.WELD.HEX – NO.FIN – SPEED SENSOR TO FRT SIDE RAIL OTR
BJ SPACER – RR FLOOR SIDEMEMBER EXTENSION – TRAILER HITCH ATTACH
BJ SPACER – RR FLOOR SIDEMEMBER EXTENSION – TRAILER HITCH ATTACH
BK NUT – PIPE – TRAILING ARM TO RR RAIL ASSY
BK NUT – PIPE – TRAILING ARM TO RR RAIL ASSY
BL STUD.WELD/INTERNAL – HEADER.PT.NIBS.NO.FIN – BUMPER TO RR RAIL ASSY
BL STUD.WELD/INTERNAL – HEADER.PT.NIBS.NO.FIN – BUMPER TO RR RAIL ASSY

Back to Index

PARTS IDENTIFICATION LEGEND, OVERVIEW 6

AA SIDEMEMBER – RR FLOOR LWR RT –
AA SIDEMEMBER – RR FLOOR LWR LT –
AB SIDEMEMBER – RR FLOOR UPR RT –
AB SIDEMEMBER – RR FLOOR UPR LT –
AC REINF – SUSPENSION RR RT –
AC REINF – SUSPENSION RR LT –
AD BRACKET – SPRING RR RT –
AD BRACKET – SPRING RR LT –
AE PANEL – SPRING RR –
AE PANEL – SPRING RR –
AF EXTENSION – RR FLOOR CROSSMEMBER FRT RT–
AF EXTENSION – RR FLOOR CROSSMEMBER FRT LT– NONE
AG AIR BAFFLE – COWL SIDE TO PLENUM RT –
AG AIR BAFFLE – COWL SIDE TO PLENUM LT –
AH BULKHEAD – RR FLOOR SIDEMEMBER RT –
AH BULKHEAD – RR FLOOR SIDEMEMBER LT –
AJ BRACKET – RR SUSPENSION RR RT –
AJ BRACKET – RR SUSPENSION RR LT –
AK REINF – RR FLOOR SIDEMEMBER RT –
AK REINF – RR FLOOR SIDEMEMBER LT –
AL SILL – RR FLOOR SIDEMEMBER RT –
AL SILL – RR FLOOR SIDEMEMBER LT –
AM PLATE – SIDE SILL RT –
AM PLATE – SIDE SILL LT –
AN BULKHEAD – RR FLOOR SIDEMEMBER RT –
AN BULKHEAD – RR FLOOR SIDEMEMBER LT –
AP BRACKET – RR BRAKE HOSE –
AP BRACKET – RR BRAKE HOSE –
AR BRACKET – TRAILING ARM RT –
AR BRACKET – TRAILING ARM LT –
AS EXTENSION – RR FLOOR SIDEMEMBER RT –
AS EXTENSION – RR FLOOR SIDEMEMBER LT –
AT BRACKET – PARKING BRAKE CABLE RR RT –
AT BRACKET – PARKING BRAKE CABLE RR LT –
AU BRACKET – RR SUSPENSION FRT –
AU BRACKET – RR SUSPENSION FRT –
AV EXTENSION – RR FLOOR SIDEMEMBER RT –
AV EXTENSION – RR FLOOR SIDEMEMBER LT –
AW REINF – RR FLOOR SIDEMEMBER EXTENSION RT –
AW REINF – RR FLOOR SIDEMEMBER EXTENSION LT –
AX EXTENSION – RR FLOOR SIDEMEMBER RT –
AX EXTENSION – RR FLOOR SIDEMEMBER LT –
AY SUPPORT – RR BUMPER RT –
AY SUPPORT – RR BUMPER LT –
AZ BULKHEAD – RR FLOOR SIDEMEMBER EXTENSION RT –
AZ BULKHEAD – RR FLOOR SIDEMEMBER EXTENSION LT –
BA HOOK – MUFFLER HANGER BRACKET –
BA HOOK – MUFFLER HANGER BRACKET –
BB NUT – PIPE – RR SUSP TO RR RAIL ASSY
BB NUT – PIPE – RR SUSP TO RR RAIL ASSY
BB NUT – PIPE – RR SUSP TO RR RAIL ASSY
BB NUT – PIPE – RR SUSP TO RR RAIL ASSY
BC STUD.WELD/EXTERNAL – PNT.CUTTER.PILOT.PT.SPECIAL – FUEL COOLER TO FRT FLR PAN

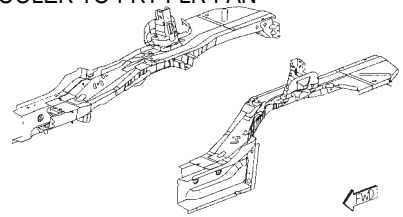

BD STUD.WELD/EXTERNAL – HEADER.PT.PNT.CUTTER.SPECIAL – FUEL TANK CLS OUT TO RR RAIL ASSY
BD STUD.WELD/EXTERNAL – HEADER.PT.PNT.CUTTER.SPECIAL – QTR INR REINF BRKT TO RR RAIL ASSY
BD STUD.WELD/EXTERNAL – HEADER.PT.PNT.CUTTER.SPECIAL – GUSSET TO EXTENSION RR FLOOR
BE TAPPING PLATE – RR RESISTANT TO RR RAIL ASSY
BF STUD.WELD/INTERNAL – HEADER.PT.NIBS.NO.FIN – RR SEAT TO RR RAIL
BG NUT.WELD/HEX – NIBS.NO.FIN – RR SEAT TO RR RAIL
BH NUT.WELD.HEX – NO.FIN – BRAKE HOSE TO BRKT
BH NUT.WELD.HEX – NO.FIN – SPEED SENSOR TO FRT SIDE RAIL OTR
BJ SPACER – RR FLOOR SIDEMEMBER EXTENSION – TRAILER HITCH ATTACH
BJ SPACER – RR FLOOR SIDEMEMBER EXTENSION – TRAILER HITCH ATTACH
BK NUT – PIPE – TRAILING ARM TO RR RAIL ASSY
BK NUT – PIPE – TRAILING ARM TO RR RAIL ASSY
BL STUD.WELD/INTERNAL – HEADER.PT.NIBS.NO.FIN – BUMPER TO RR RAIL ASSY
BL STUD.WELD/INTERNAL – HEADER.PT.NIBS.NO.FIN – BUMPER TO RR RAIL ASSY

Back to Index

WELD LAYOUT LOCATION GUIDE

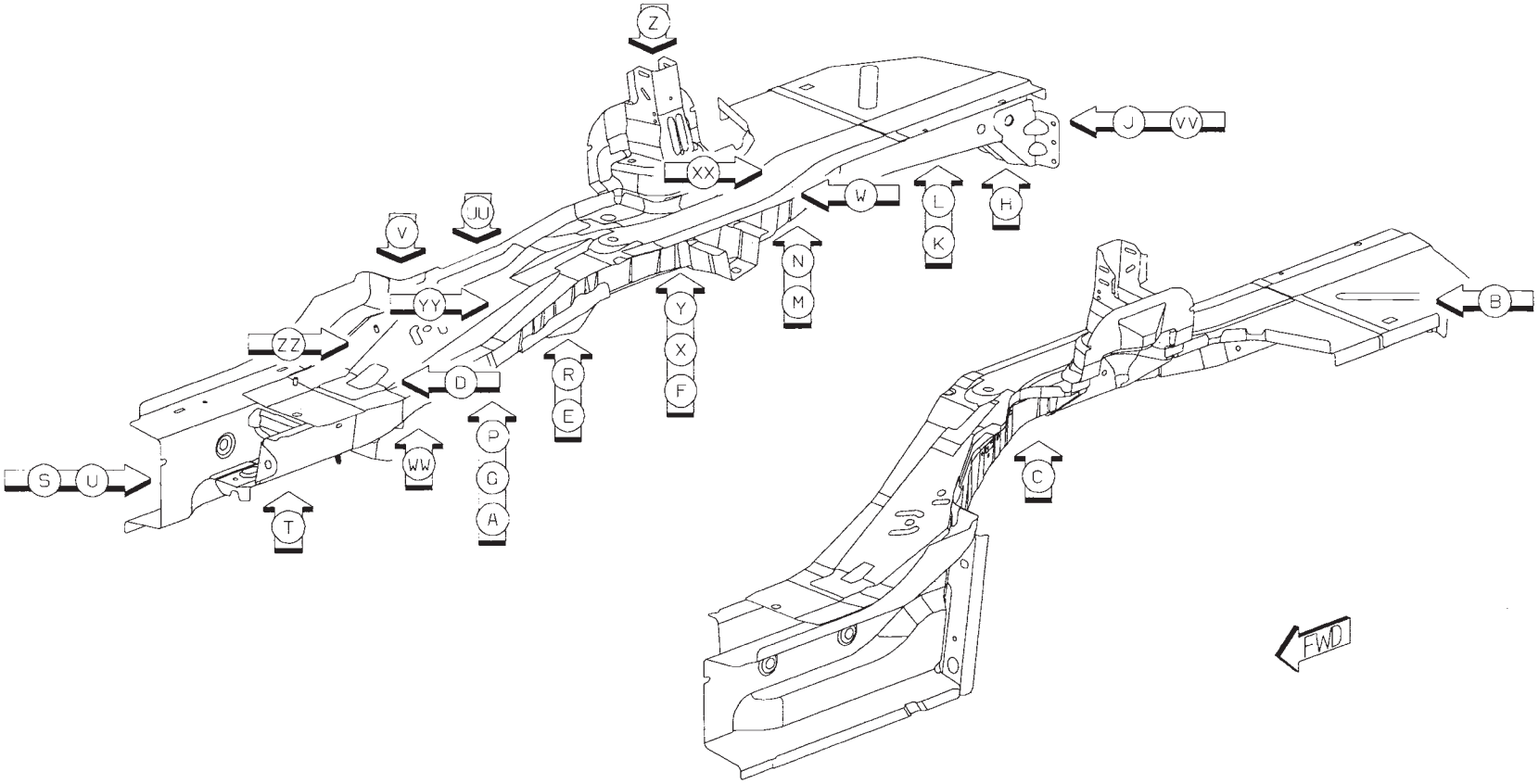

Back to Index

01 AC TO AE 4/SD S/WELDS (CRT)
02 AC TO AD TO AE 2/SD S/WELDS (CRT)
03 AC TO AE 2/SD S/WELDS (CRT)
04 AB TO AD TO AE 2/SD S/WELDS (CRT)
05 AD TO AE 3/SD S/WELDS (CRT)
06 AB TO AA TO AD 3/SD S/WELDS (CRT)
07 AB TO AD 4/SD S/WELDS (CRT)
08 AC TO AD 6/SD S/WELDS (CRT)
09 AF TO AA TO AB 2/SD S/WELDS (ORD)

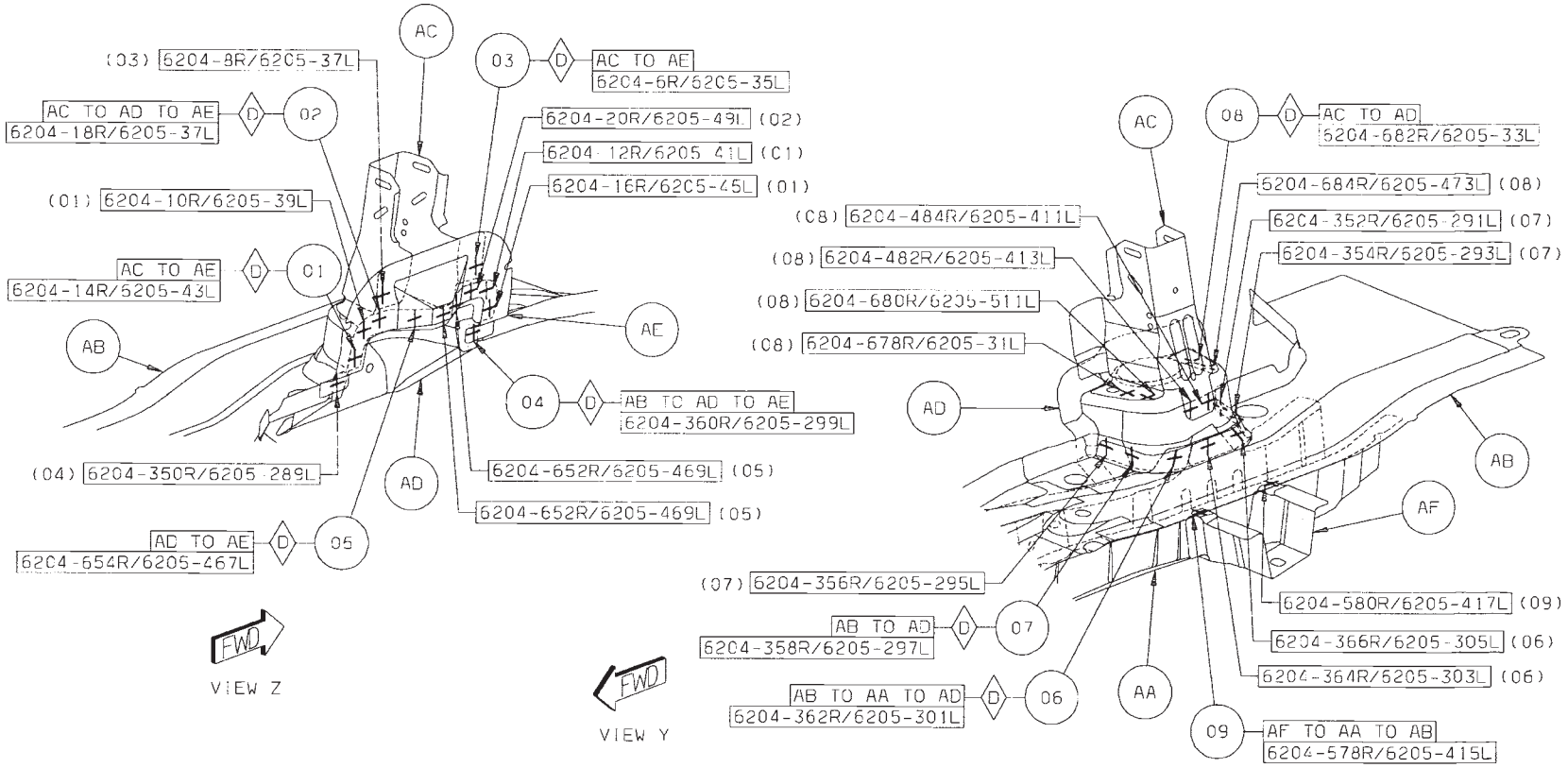

Back to Index

10 AG TO AA 6/SD S/WELDS (ORD)
11 AD TO AA 6/SD S/WELDS (CRT)
12 AJ TO AA 6/SD S/WELDS (CRT)
13 AF TO AA TO AD 1/SD S/WELD (ORD)
14 AF TO AA 2/SD S/WELDS (ORD)
15 AH TO AA TO AD 2/SD S/WELDS (CRT)
16 AJ TO AA TO AD 2/SD S/WELDS (CRT)

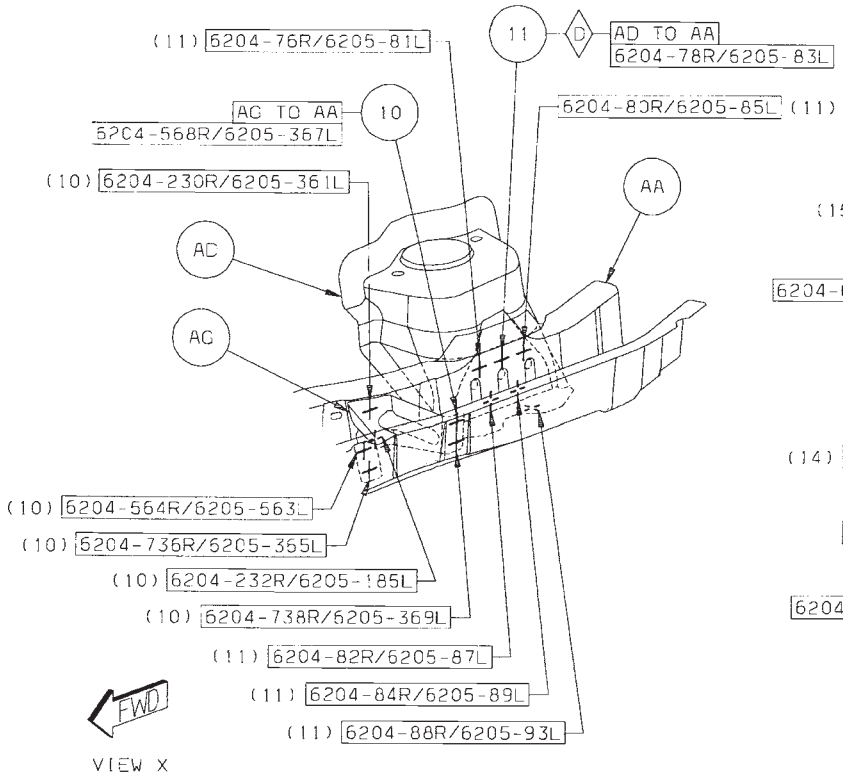

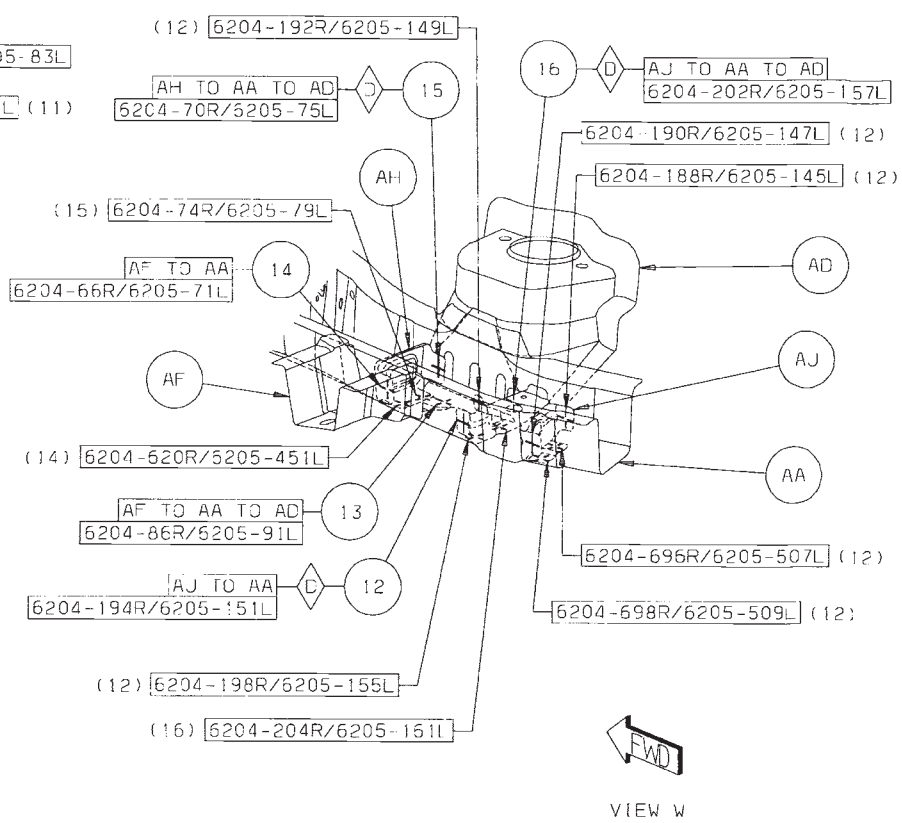

Back to Index

17 AM TO AL 8/SD S/WELDS (ORD)
18 AA TO AM TO AL 1/SD S/WELD (CRT)
19 AK TO AA TO AL 2/SD S/WELDS (CRT)
20 AB TO AM TO AL 1/SD S/WELD (ORD)
21 AA TO AM TO AL 1/SD S/WELD (ORD)
22 AA TO AL 13/SD S/WELDS (ORD)

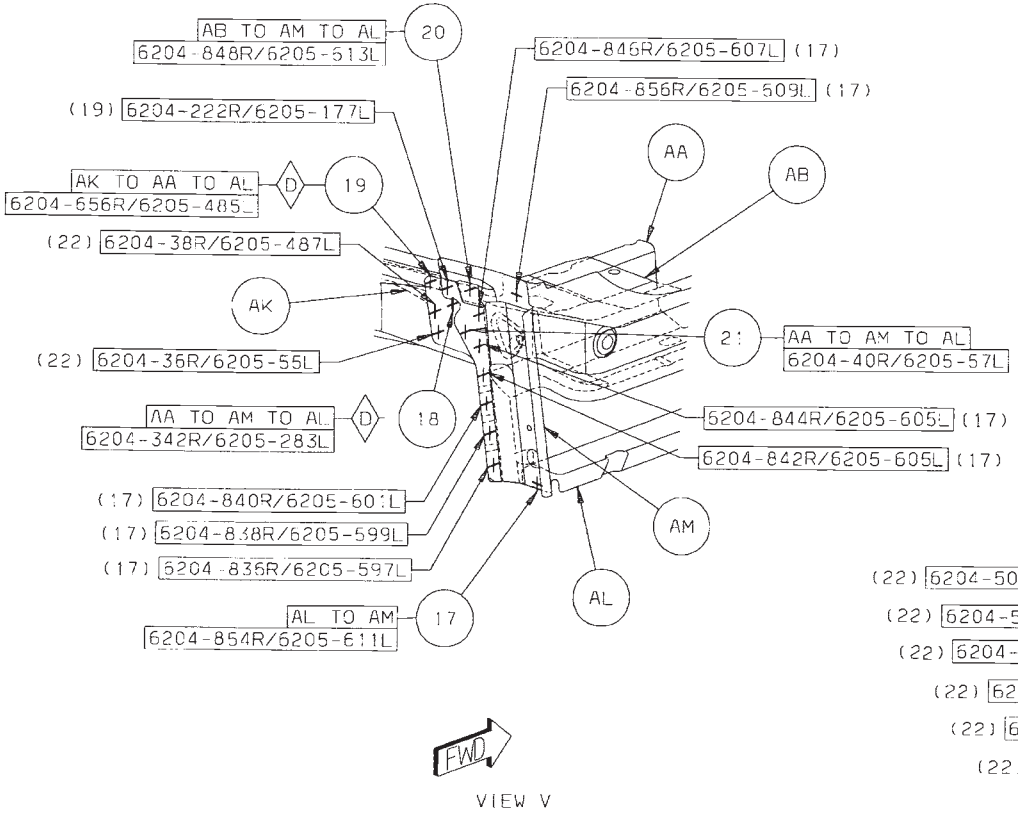

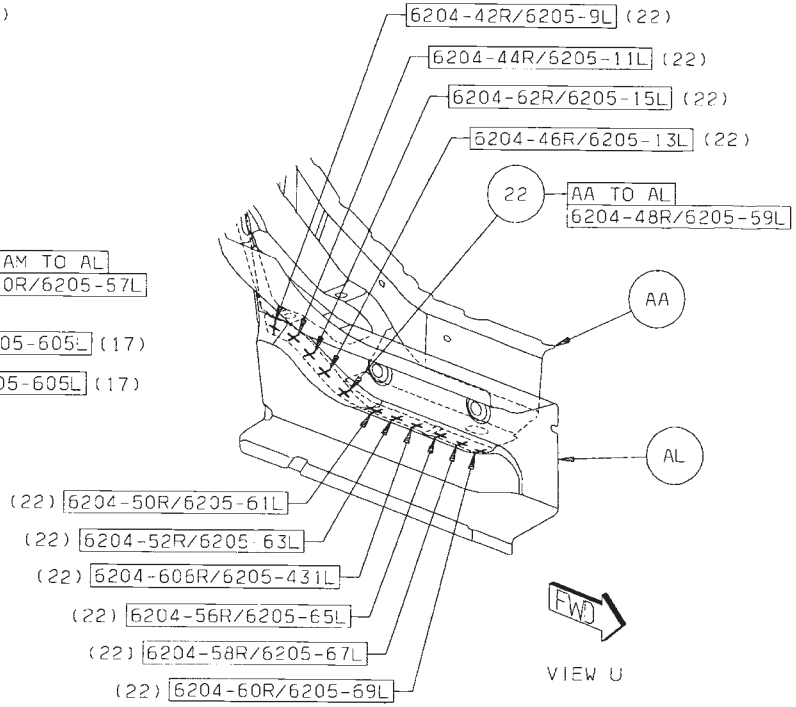

Back to Index

23 AB TO AL 3/SD S/WELDS (ORD)
24 AB TO AK TO AL 6/SD S/WELDS (CRT)
25 AL TO AN 1/SD S/WELD (ORD)
26 AT TO AA TO AR 1 S/WELD (CRT)
27 AR TO AA 12/SD S/WELDS (CRT)
28 AP TO AA TO AR 2/SD S/WELDS (CRT)
29 AN TO AS TO AA 1/SD S/WELD (ORD)
30 AS TO AA 7/SD S/WELDS (ORD)
31 AA TO AT 1 S/WELD (CRT)

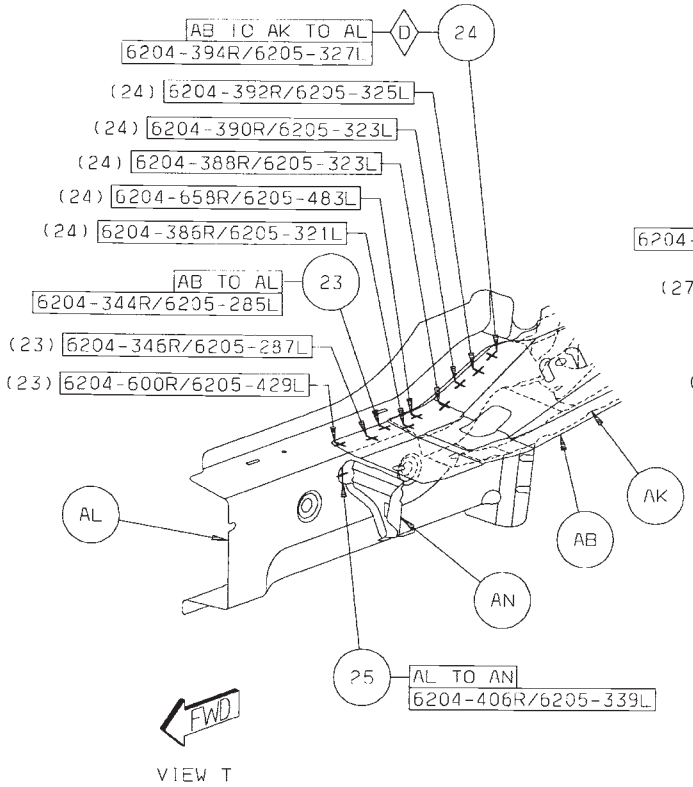

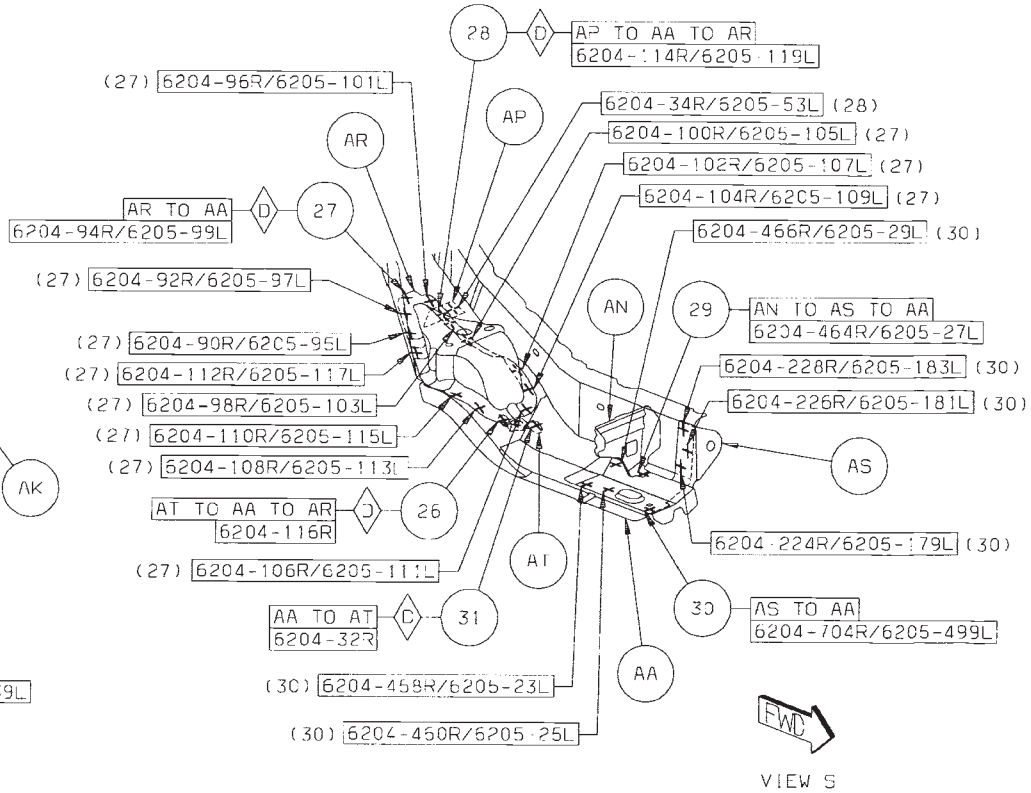

Back to Index

32 AK TO AR 2/SD S/WELDS (CRT)
33 AU TO AA 13/SD S/WELDS (CRT)
34 AF TO AA 5/SD S/WELDS (ORD)

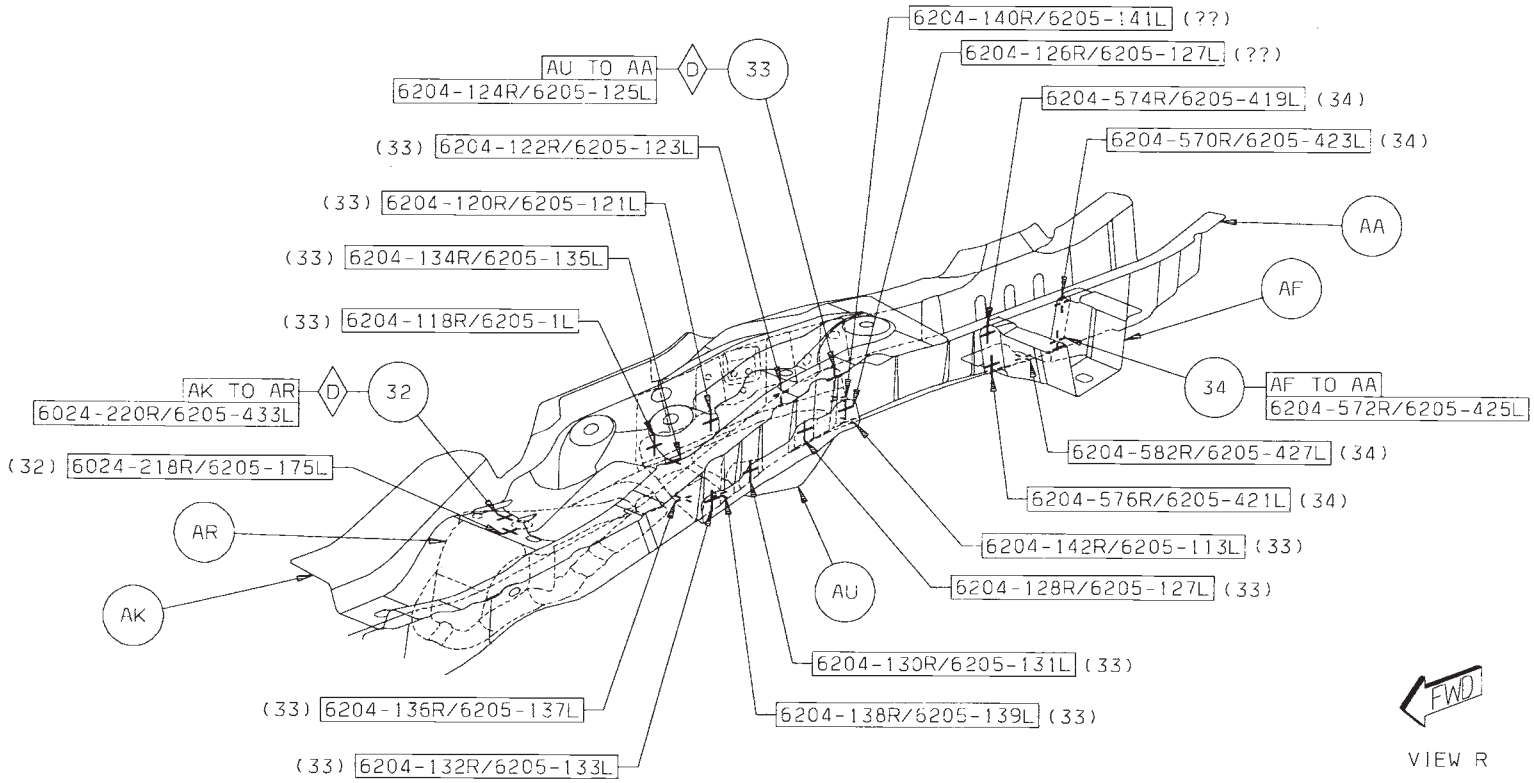

Back to Index

35 AK TO AA 4/SD S/WELDS (CRT)
36 AB TO AA TO AK 21/SD S/WELDS (CRT)
37 AB TO AA 2/SD S/WELDS (ORD)

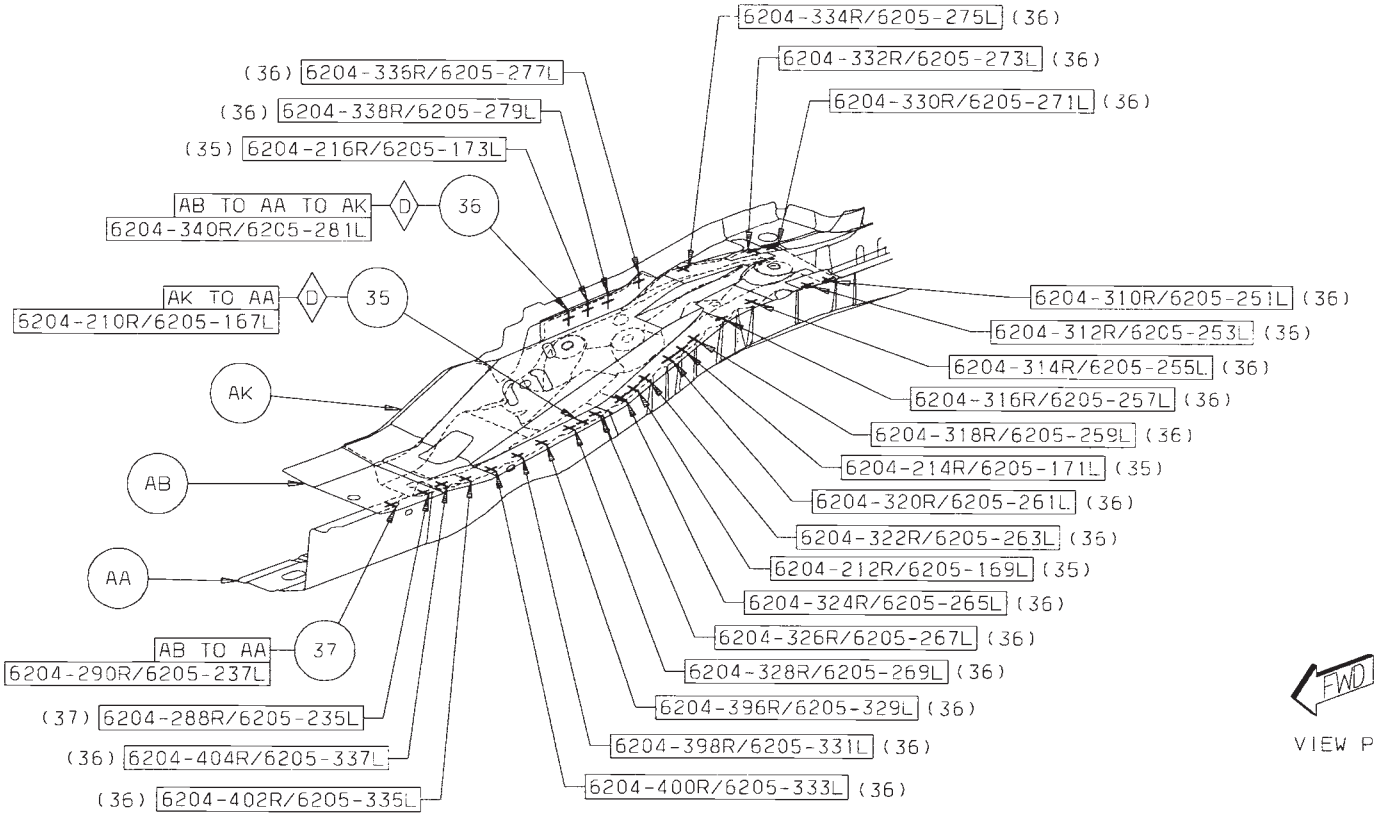

Back to Index

38 AB TO AA 7/SD S/WELDS (CRT)
39 AB TO AA TO AV 4/SD S/WELDS (CRT)
40 AV TO AB 12/SD S/WELDS (ORD)

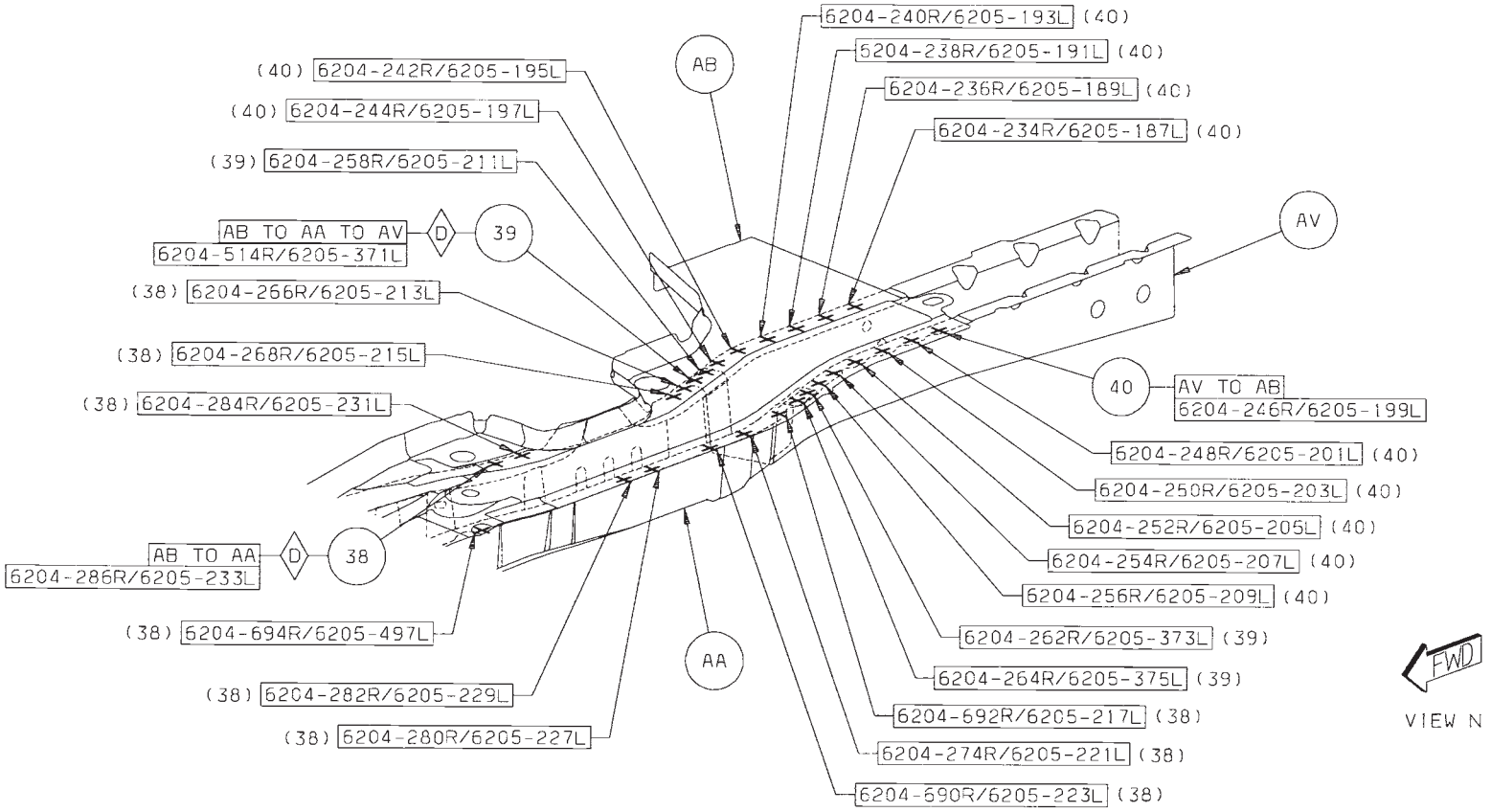

Back to Index

41 AV TO AA 4/SD S/WELDS (ORD)
42 AV TO AW TO AA 6/SD S/WELDS (ORD)
43 AW TO AV 14R/13L S/WELDS (ORD)

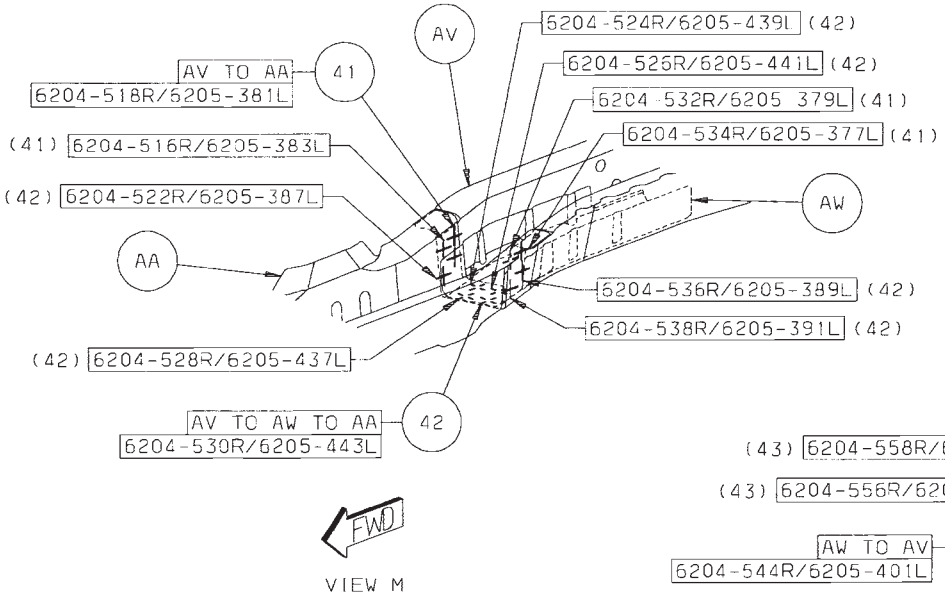

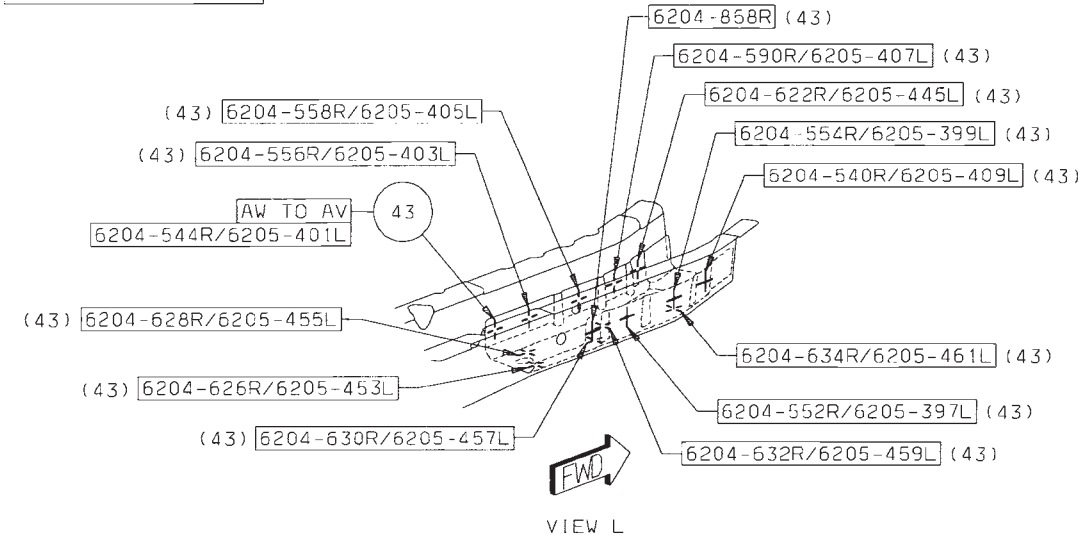

Back to Index

44 AX TO AB 5/SD S/WELDS (ORD)
45 AX TO AV 8/SD S/WELDS (ORD)
46 AX TO AB TO AV 2/SD S/WELDS (ORD)

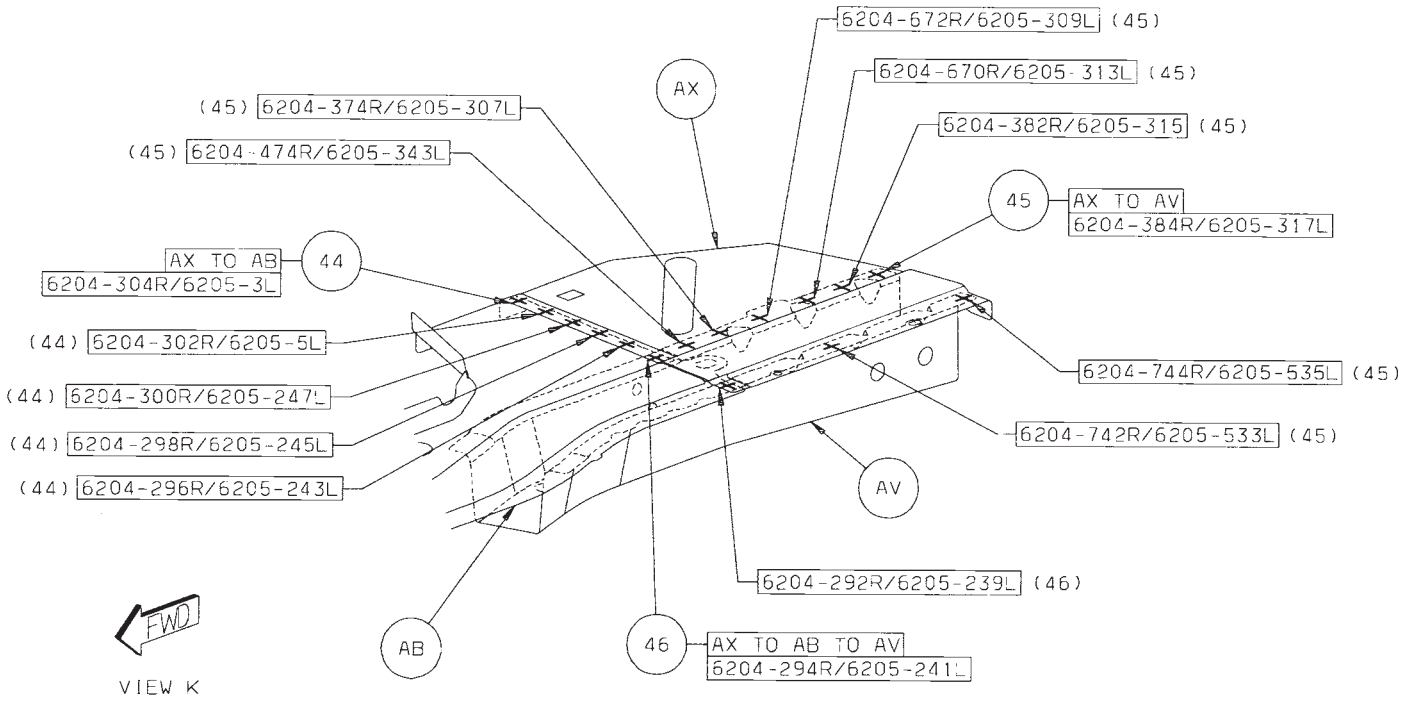

Back to Index

47 AY TO AV 6/SD S/WELDS (ORD)
48 AZ TO AV TO AY 2/SD S/WELDS (ORD)
49 BA TO AV 2/SD S/WELDS (ORD)
50 AZ TO AV 2/SD S/WELDS (ORD)

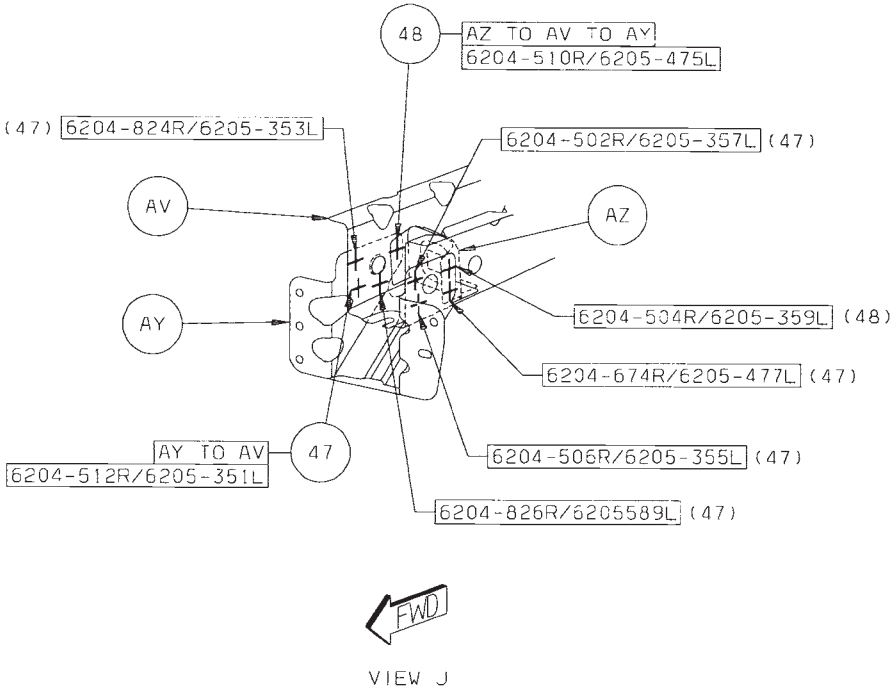

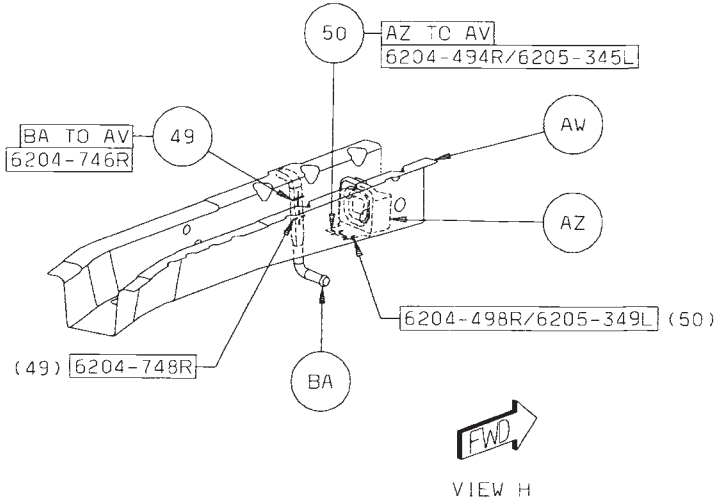

Back to Index

51 AK TO AL 1 STRUC ADH
52 AL TO AM 1 STRUC ADH
53 AD TO AA 1/SD STRUC ADH
54 AJ TO AA 2/SD ARC WELDS (CRT)
55 BB TO AJ 2/SD ARC WELDS (CRT)
56 BB TO AA 2/SD ARC WELDS (CRT)
57 AL TO AA 1 STRUC ADH
58 AL TO AA 1 STRUC ADH

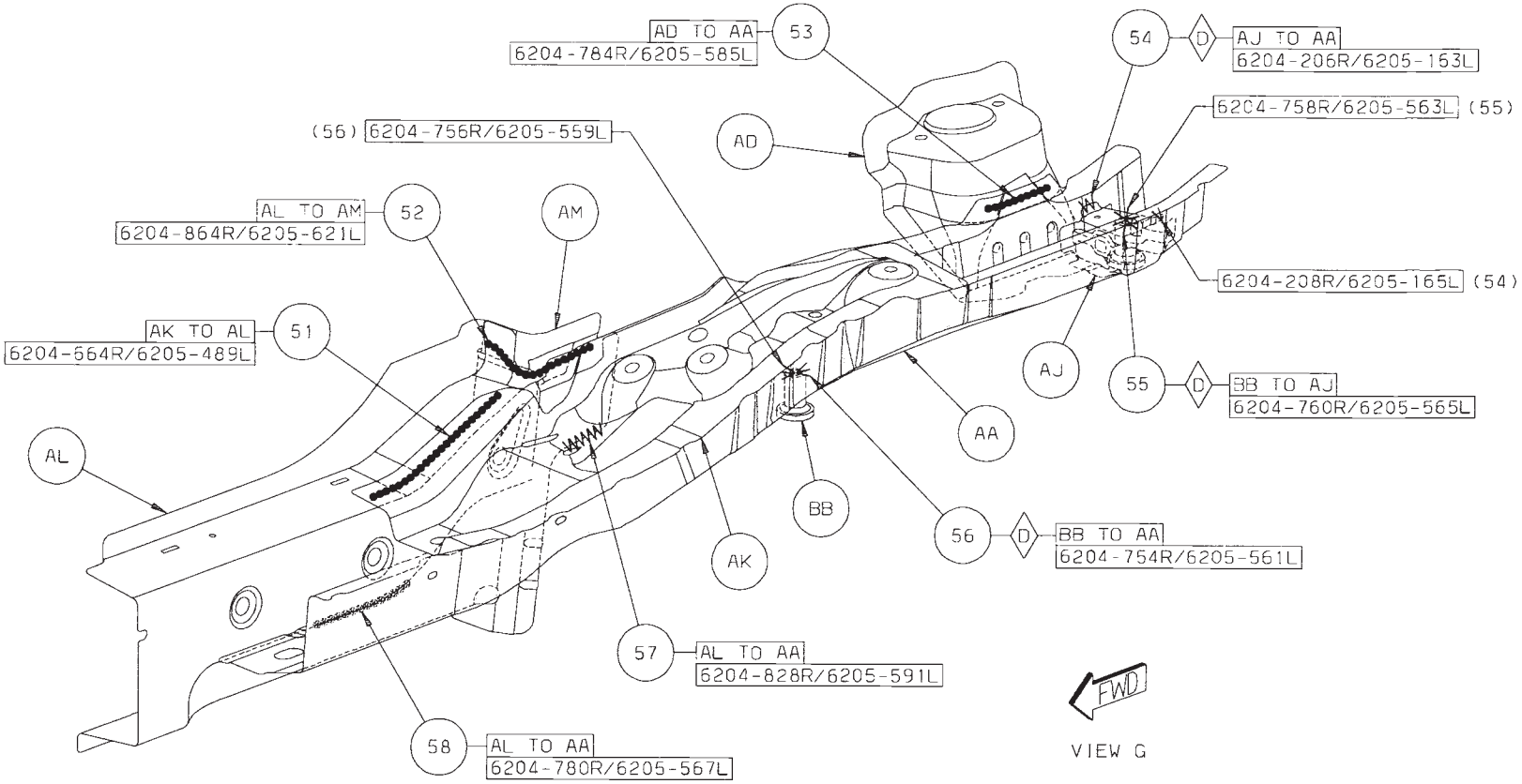

Back to Index

59 AB TO AA TO AL 1/SD STRUC ADH
60 AD TO AE 1/SD STRUC ADH
61 BA TO AV 4R/2L ARC WELDS (ORD)
62 AX TO AB 1/SD STRUC ADH
63 AB TO AA TO AD TO AE 1/SD STRUC ADH
64 AB TO AK TO AL 1/SD STRUC ADH

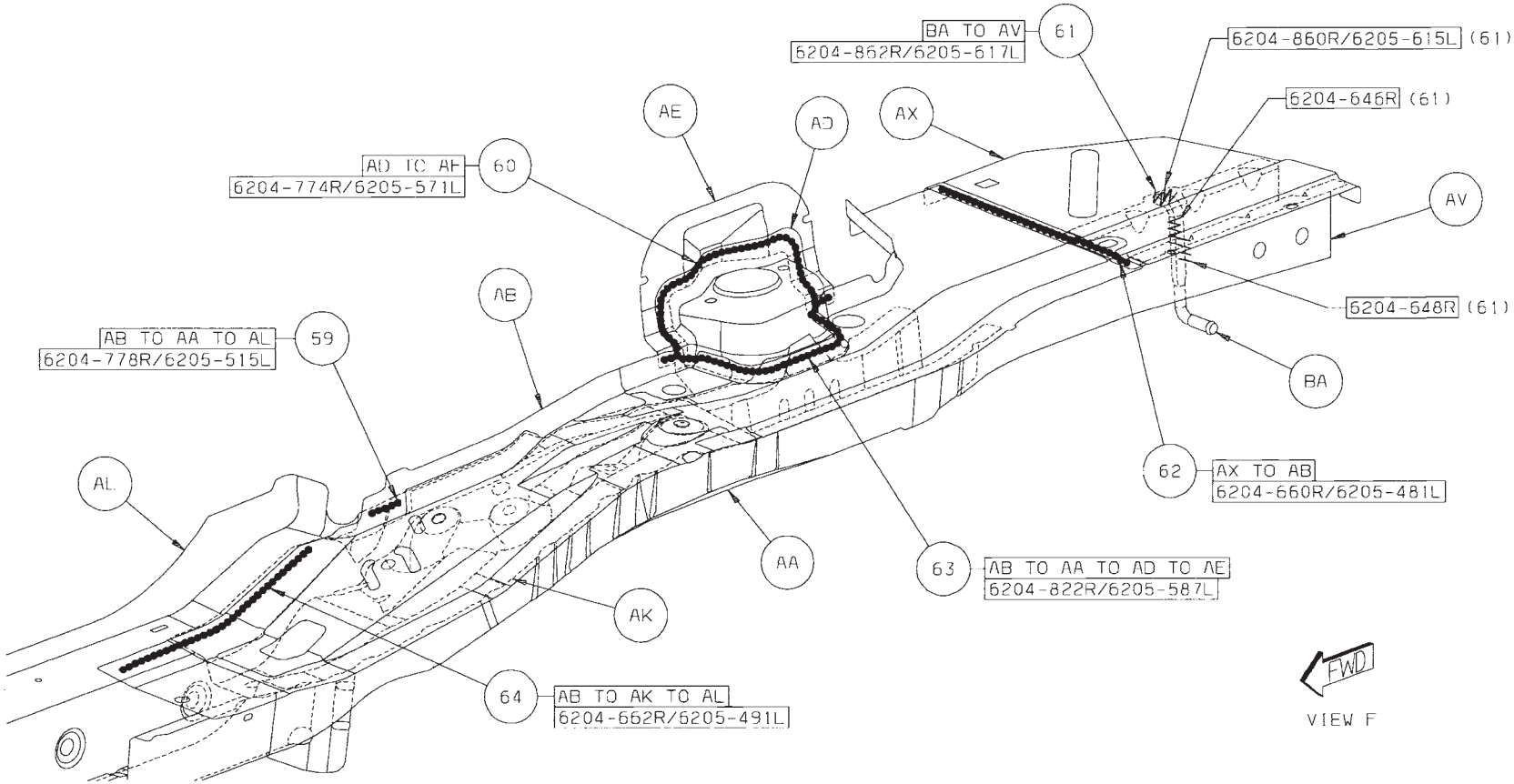

Back to Index

65 BD TO AE 4/SD PROJ WELDS (ORD)
66 BC TO AA 1/SD PROJ WELD (ORD)
67 BD TO AA 1/SD PROJ WELD (ORD)
68 BD TO AL 2 PROJ WELDS (ORD)

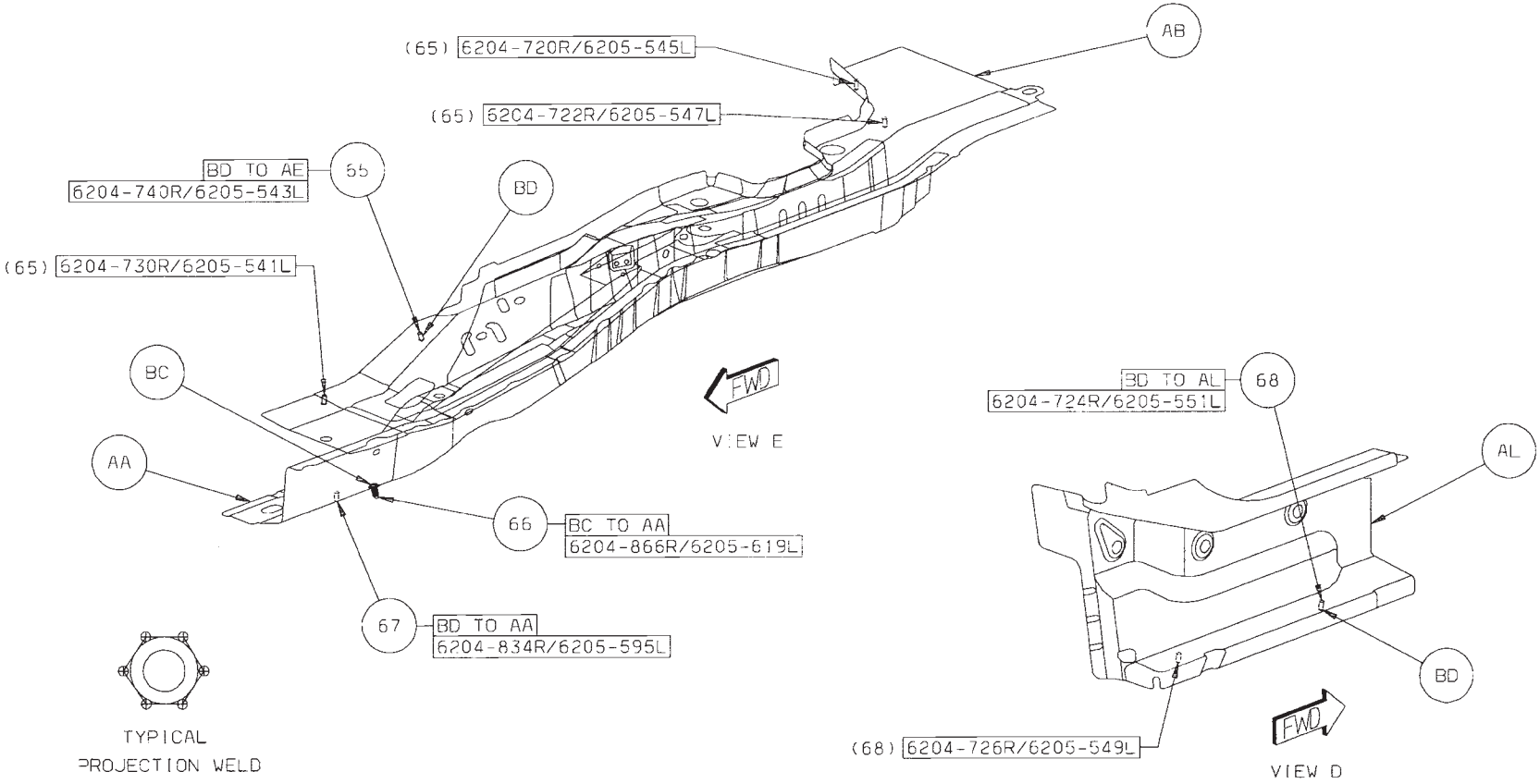

Back to Index

69 AB TO AA 1 S/WELD (ORD)
70 BA TO AV 2 S/WELDS (ORD)
71 AR TO AA 1 S/WELD (CRT)
72 AT TO AA 2 S/WELDS (CRT)
73 BA TO AV 2 ARC WELDS (ORD)
74 AV TO AW 1 S/WELD (ORD)

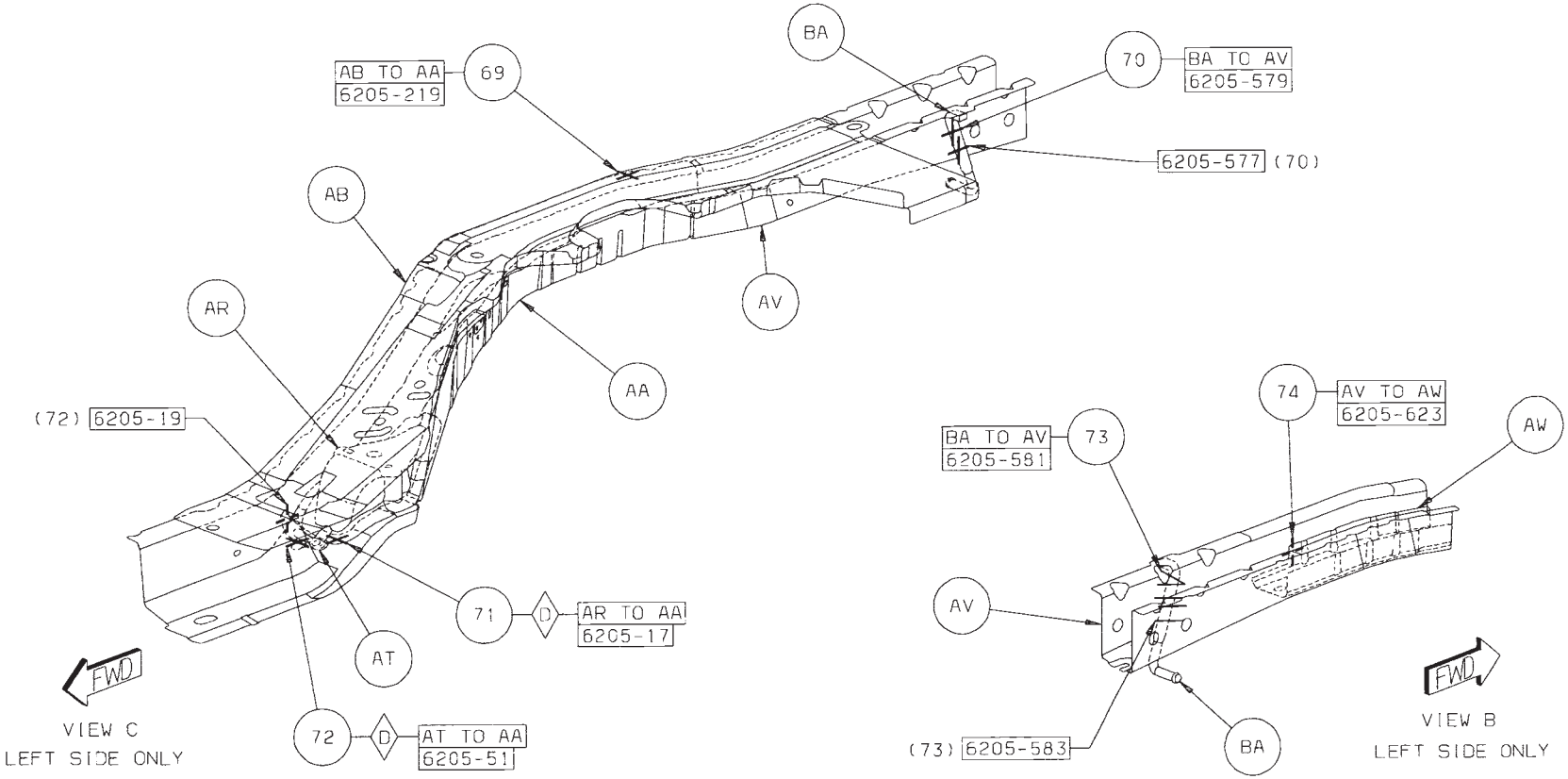

Back to Index

75 BE TO AB 4/SD S/WELDS (ORD)
76 BF TO AK 1/SD PROJ WELD (ORD)
77 BG TO AK 1/SD PROJ WELD (ORD)
78 BB TO AA 1/SD PROJ WELD (ORD)
79 BB TO AU 1/SD PROJ WELD (ORD)
80 BH TO AT 1/SD PROJ WELD (ORD)

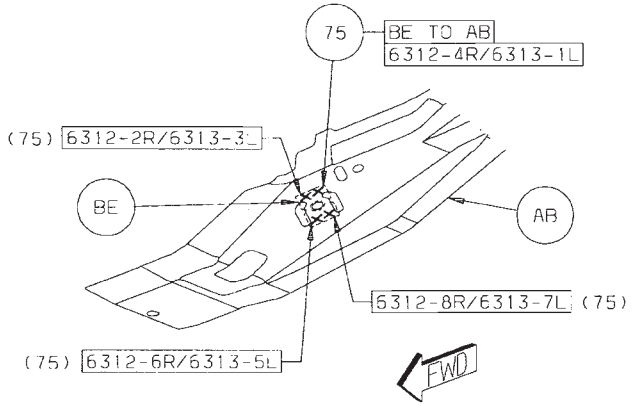

VIEW A

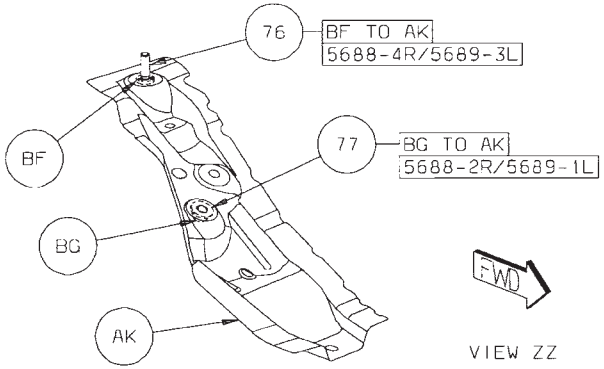

VIEW ZZ

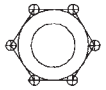

TYPICAL
PROJECTION WELD

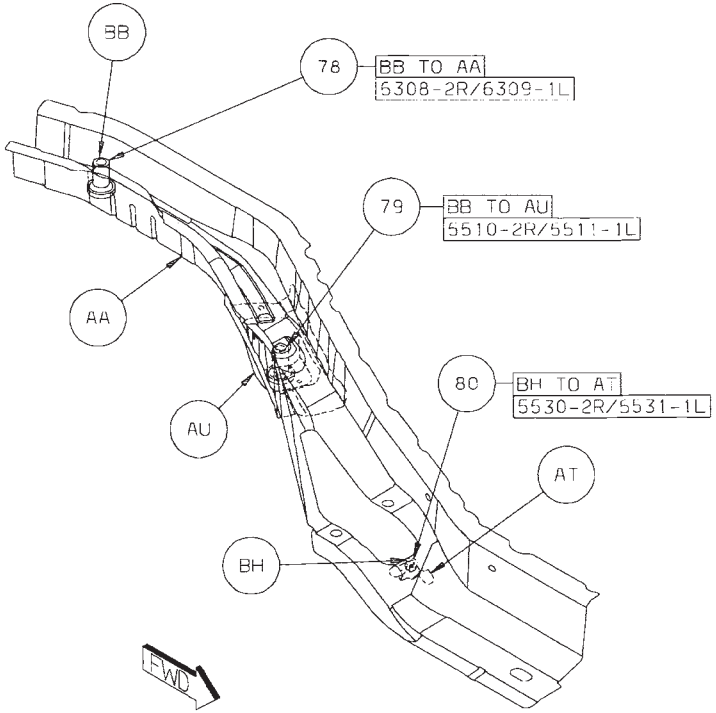

VIEW YY

Back to Index

81 BJ TO AV 4/SD ARC WELDS (ORD)
82 AK TO AR 4/SD ARC WELDS (SAF)
83 AZ TO AV 1/SD S/WELD (ORD)
84 BL TO AY 3/SD PROJ WELDS (ORD)
85 BH TO AP 1/SD PROJ WELD (ORD)

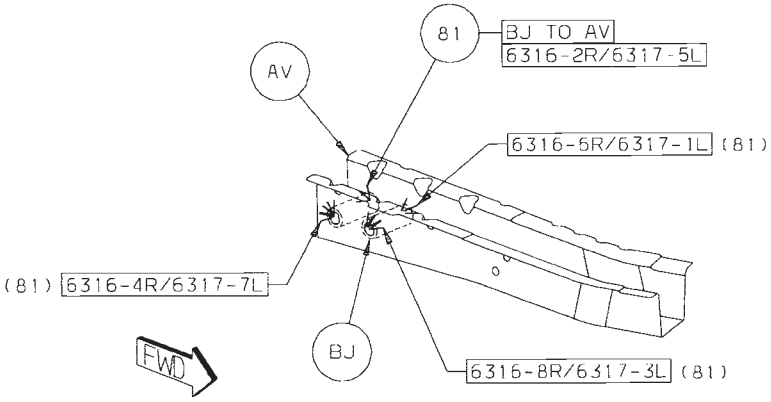

VIEW XX

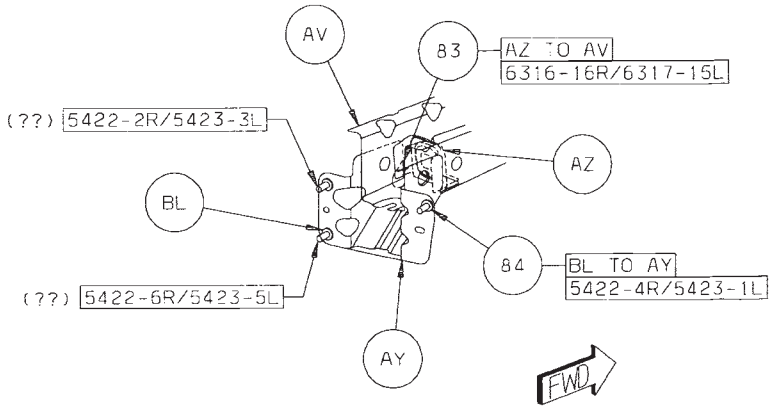

VIEW VV

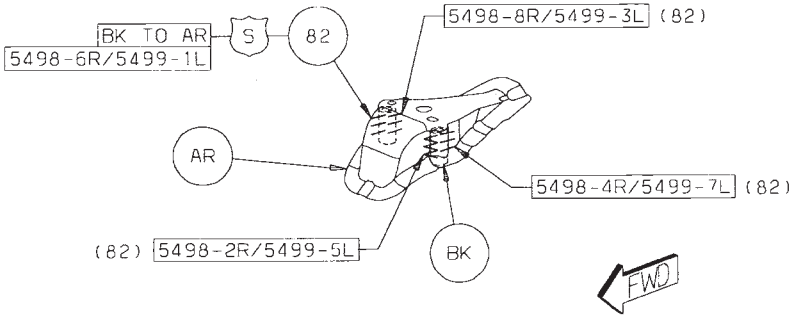

VIEW WW

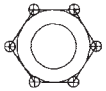
TYPICAL
PROJECTION WELD

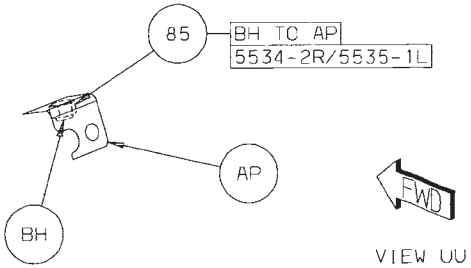

VIEW UU

Back to Index

CHRYSLER SEBRING SOUND DEADENER LOCATIONS

Back to Index

CHRYSLER SEBRING
SOUND DEADENER LOCATIONS

DESCRIPTION	FIGURE
PLENUM/FRONT FLOOR PAN	1
CENTER FLOOR PAN SECTION	2
REAR FLOOR PAN/SPARE TIRE WELL	3
LOWER FRONT DASH PANEL	4
FRONT DOOR	5
PURFOAM OVERVIEW	6

Back to Index

SOUND DEADENER LOCATIONS

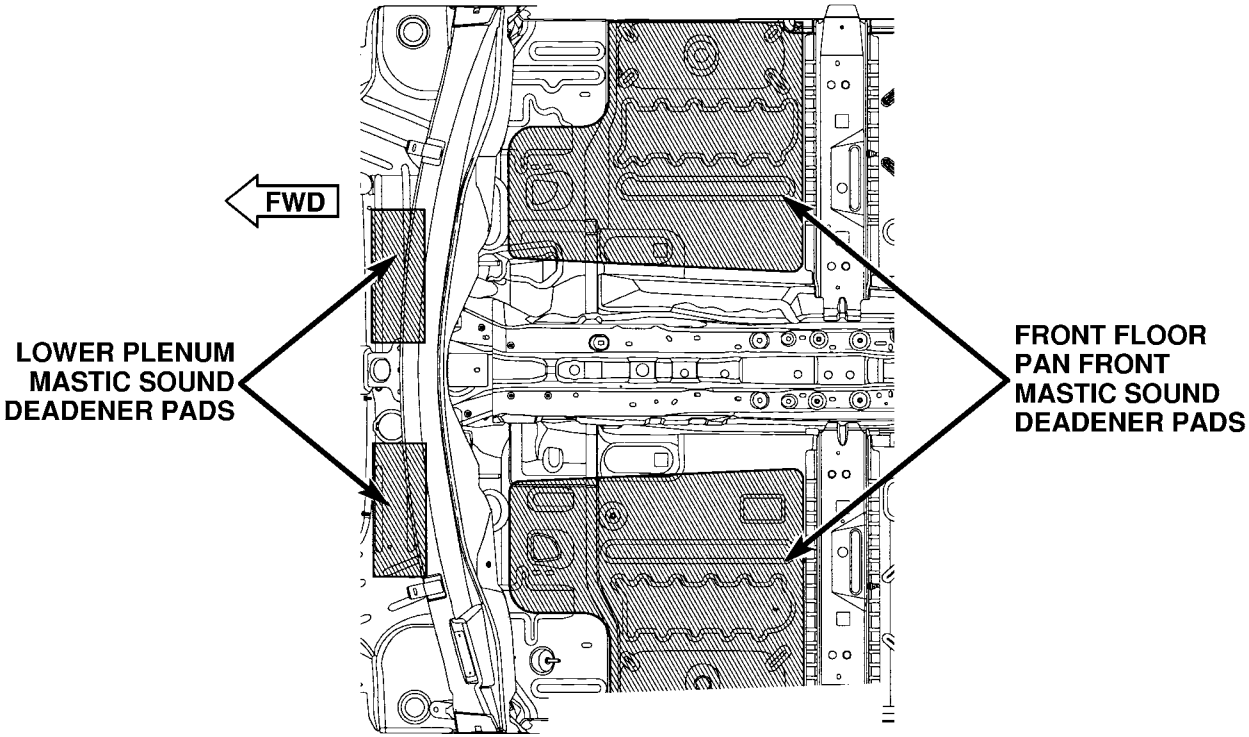

Figure 1. PLENUM/FRONT FLOOR PAN

Back to Index

SOUND DEADENER LOCATIONS

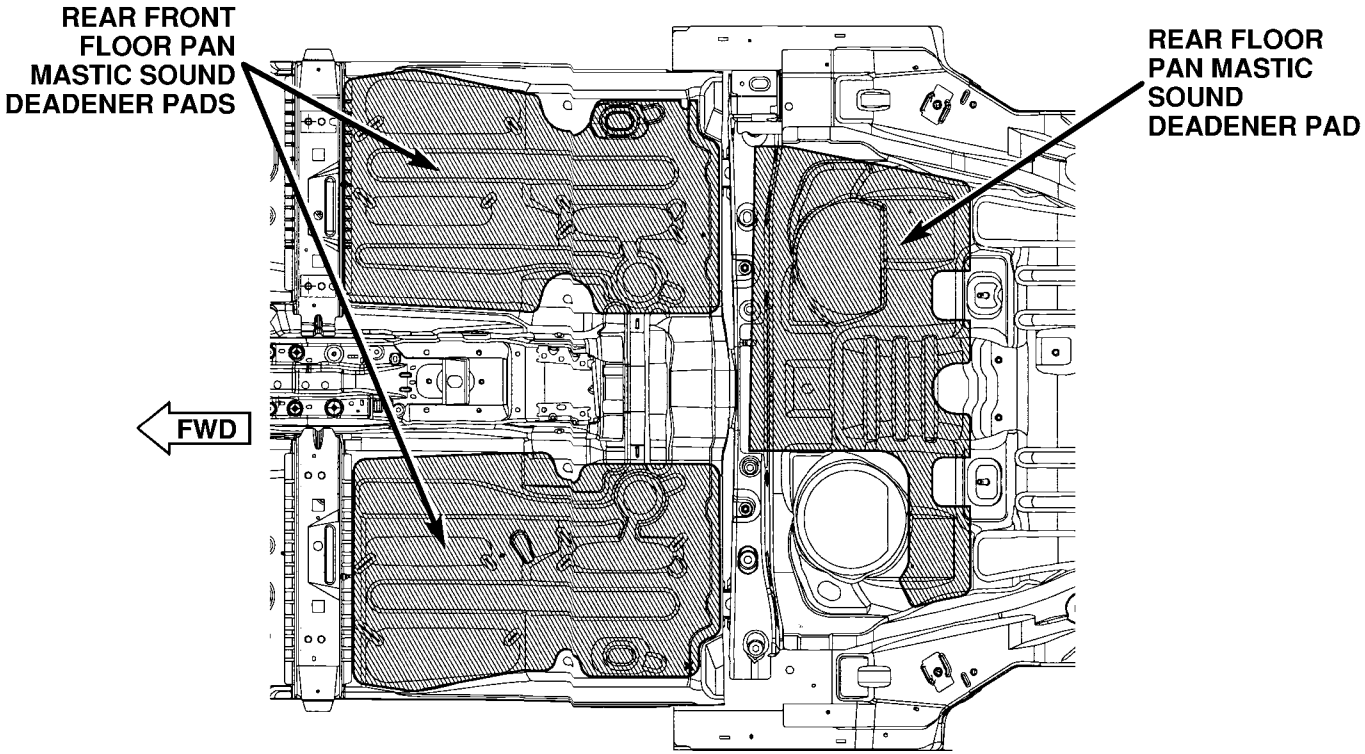

Figure 2. CENTER FLOOR PAN SECTION

Back to Index

SOUND DEADENER LOCATIONS

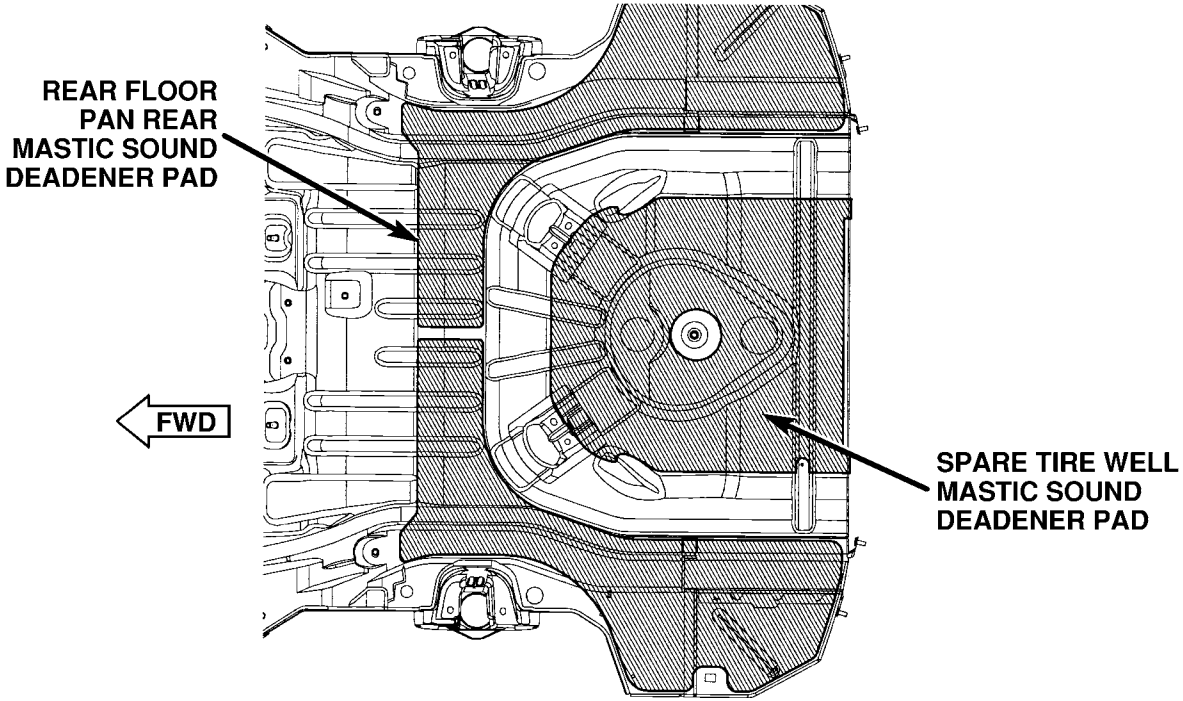

Figure 3. REAR FLOOR PAN/SPARE TIRE WELL

Back to Index

SOUND DEADENER LOCATIONS

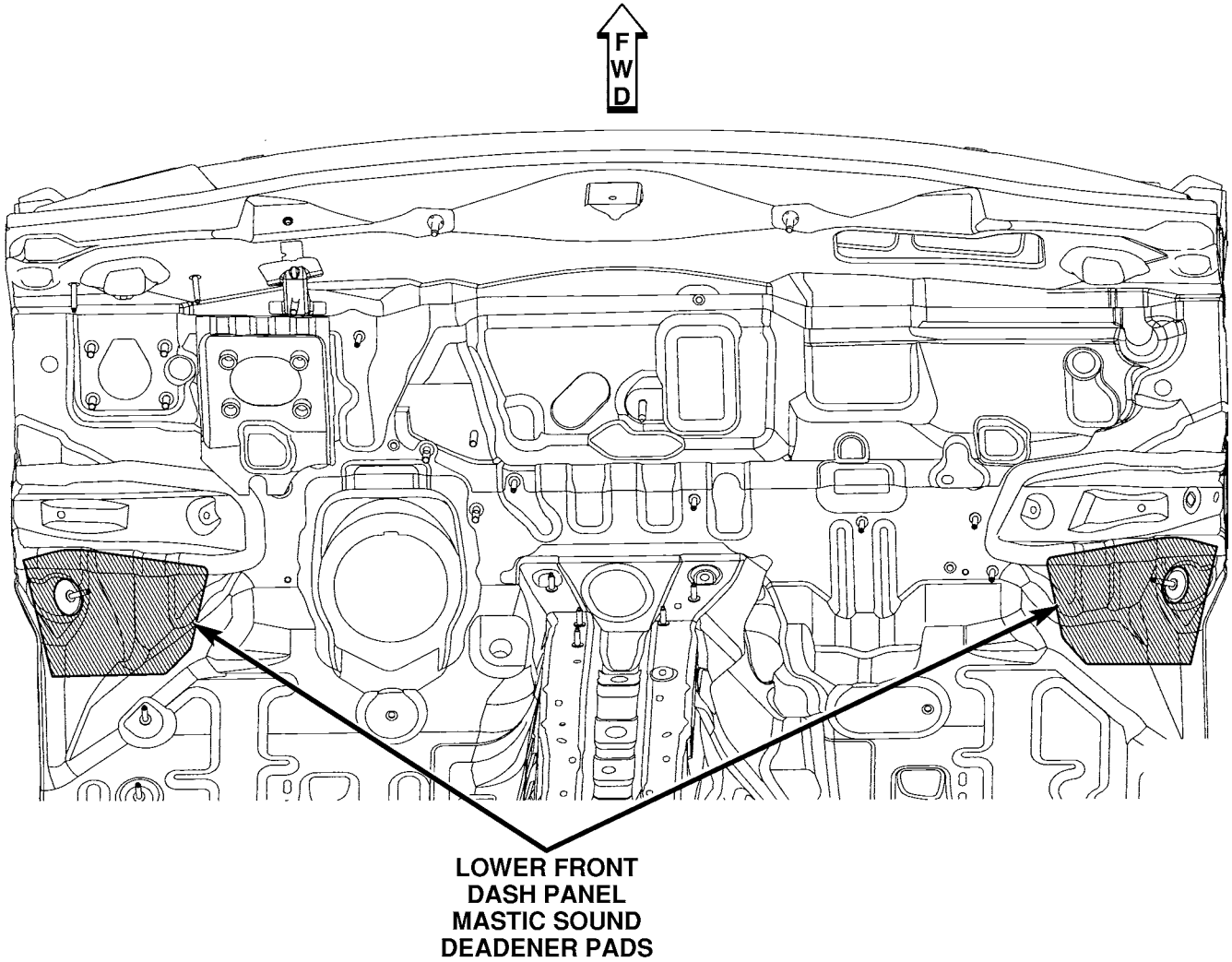

Figure 4. LOWER FRONT DASH PANEL

Back to Index

SOUND DEADENER LOCATIONS

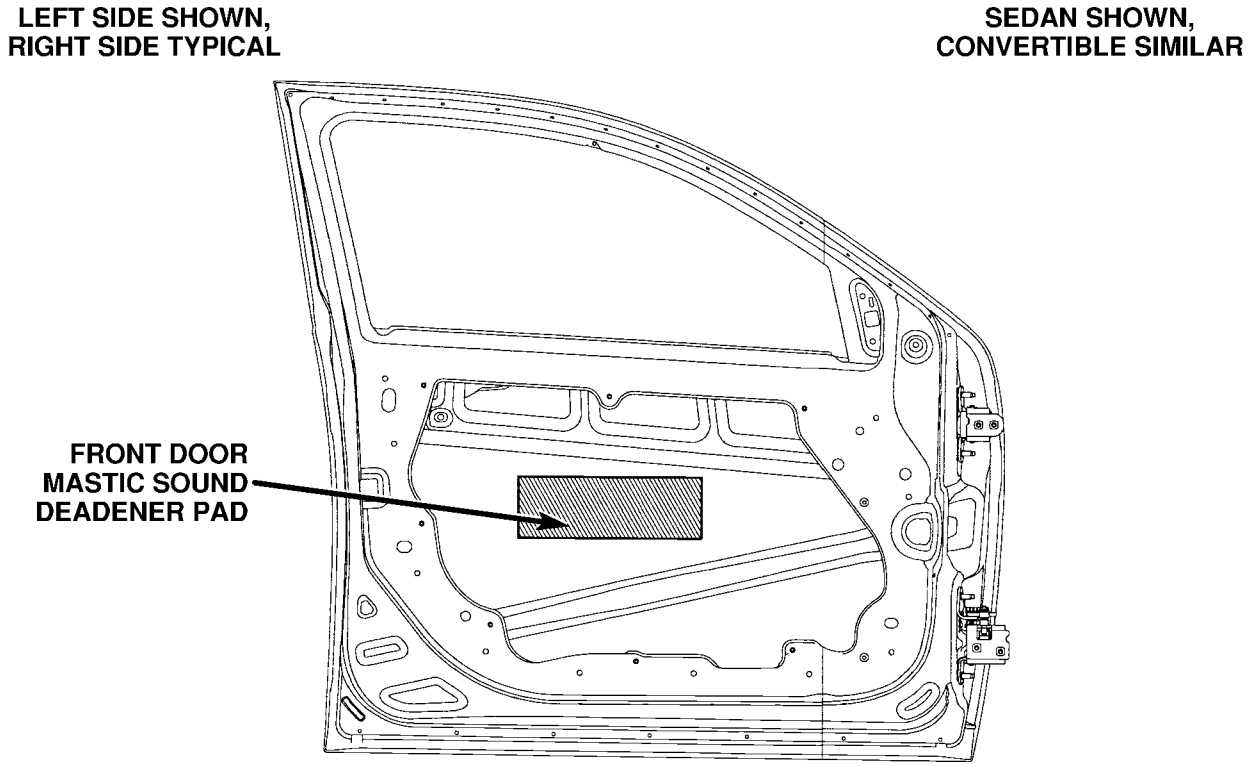

Figure 5. FRONT DOOR

Back to Index

SOUND DEADENER LOCATIONS

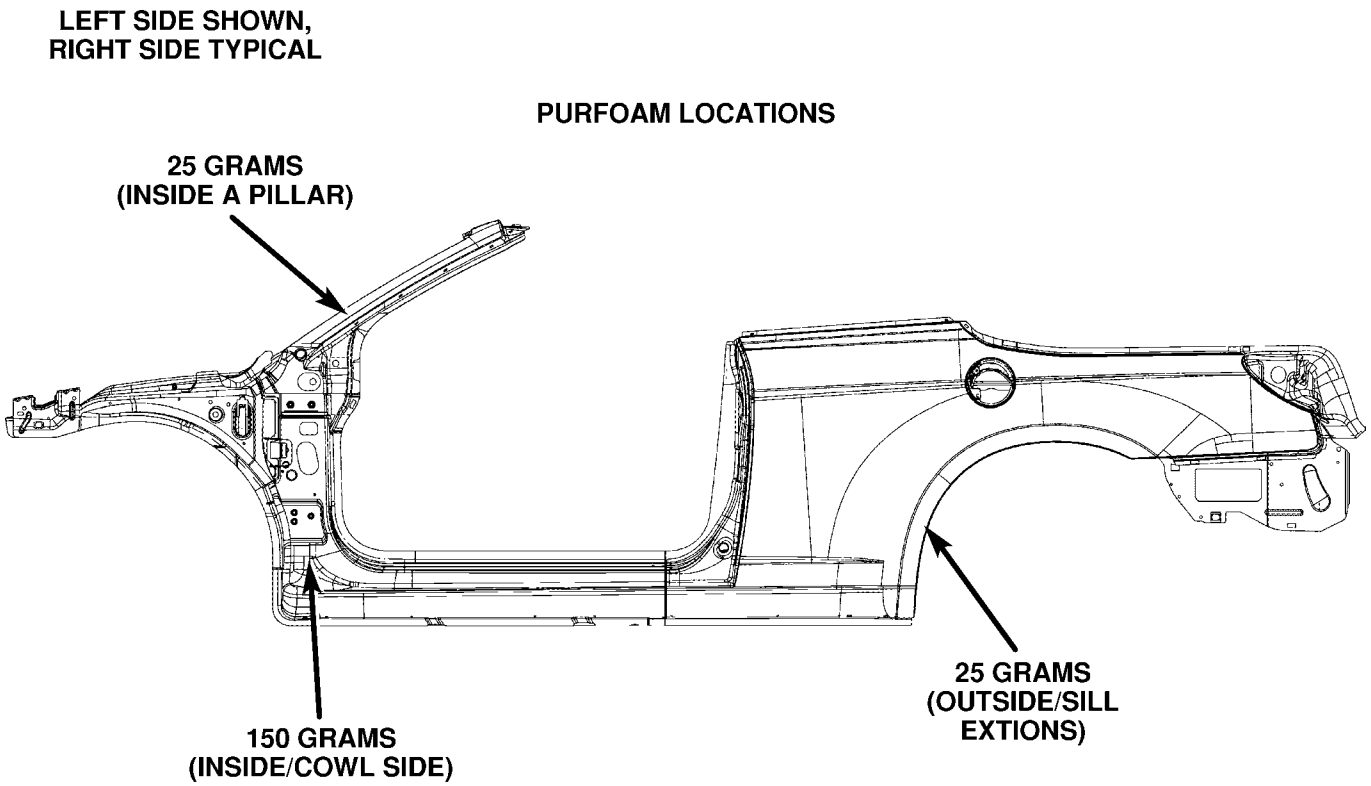

Figure 6. PURFOAM OVERVIEW

Back to Index

Chrysler Sebring
Dodge Avenger

SOUND DEADENER LOCATIONS

Back to Index

CHRYSLER SEBRING/DODGE AVENGER
SOUND DEADENER LOCATIONS

DESCRIPTION	FIGURE
PLENUM/FRONT FLOOR PAN	1
CENTER FLOOR PAN SECTION	2
REAR FLOOR PAN/SPARE TIRE WELL	3
LOWER FRONT DASH PANEL	4
ROOF	5
FRONT DOOR	6
REAR DOOR	7
PURFOAM OVERVIEW	8

Back to Index

SOUND DEADENER LOCATIONS

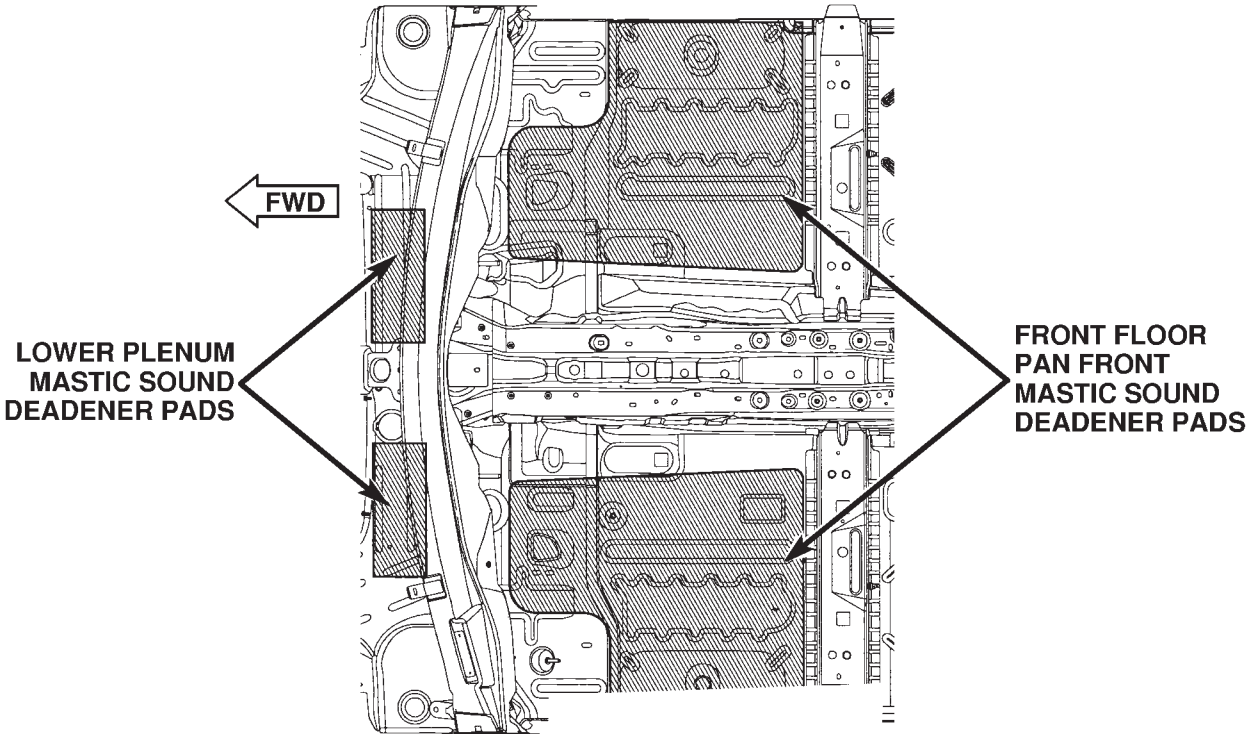

Figure 1. PLENUM/FRONT FLOOR PAN

Back to Index

SOUND DEADENER LOCATIONS

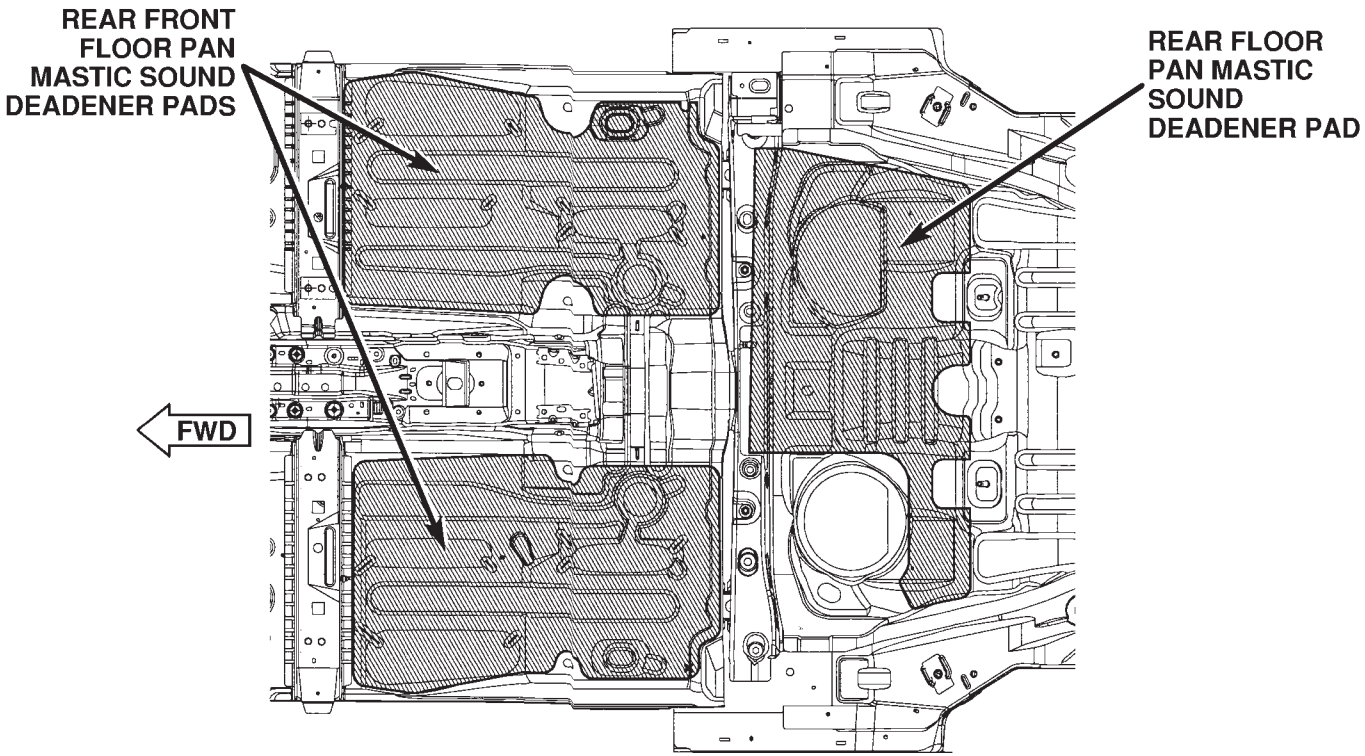

Figure 2. CENTER FLOOR PAN SECTION

Back to Index

SOUND DEADENER LOCATIONS

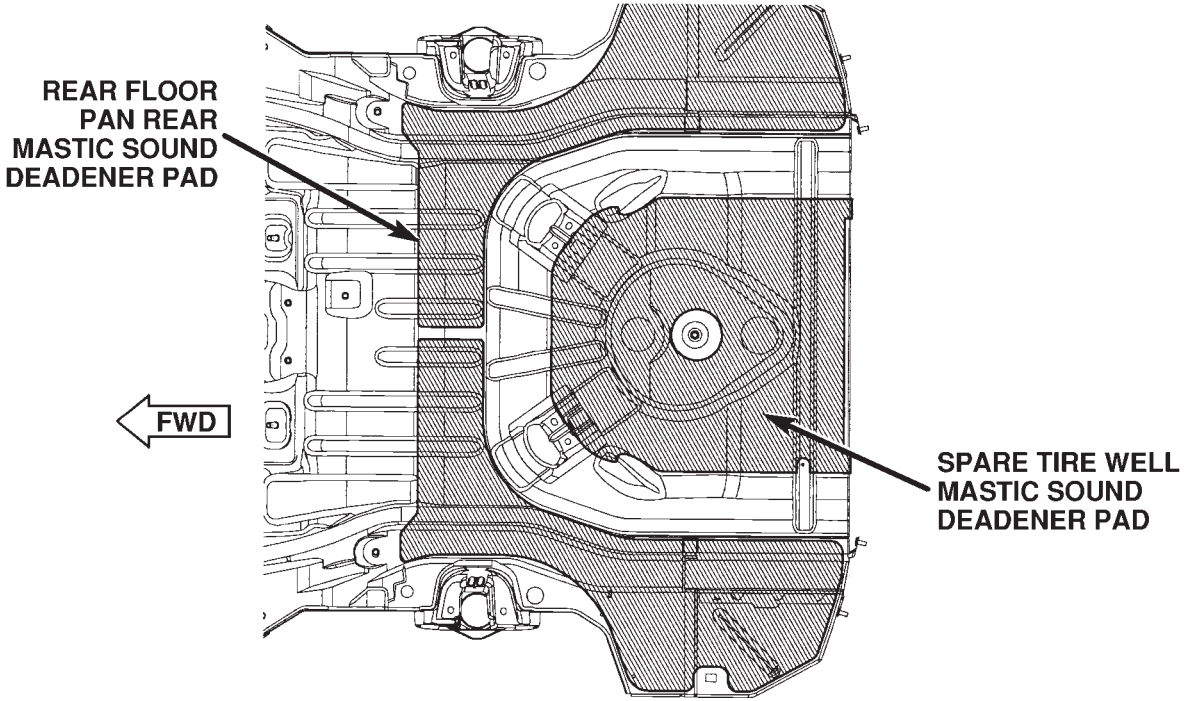

Figure 3. REAR FLOOR PAN/SPARE TIRE WELL

Back to Index

SOUND DEADENER LOCATIONS

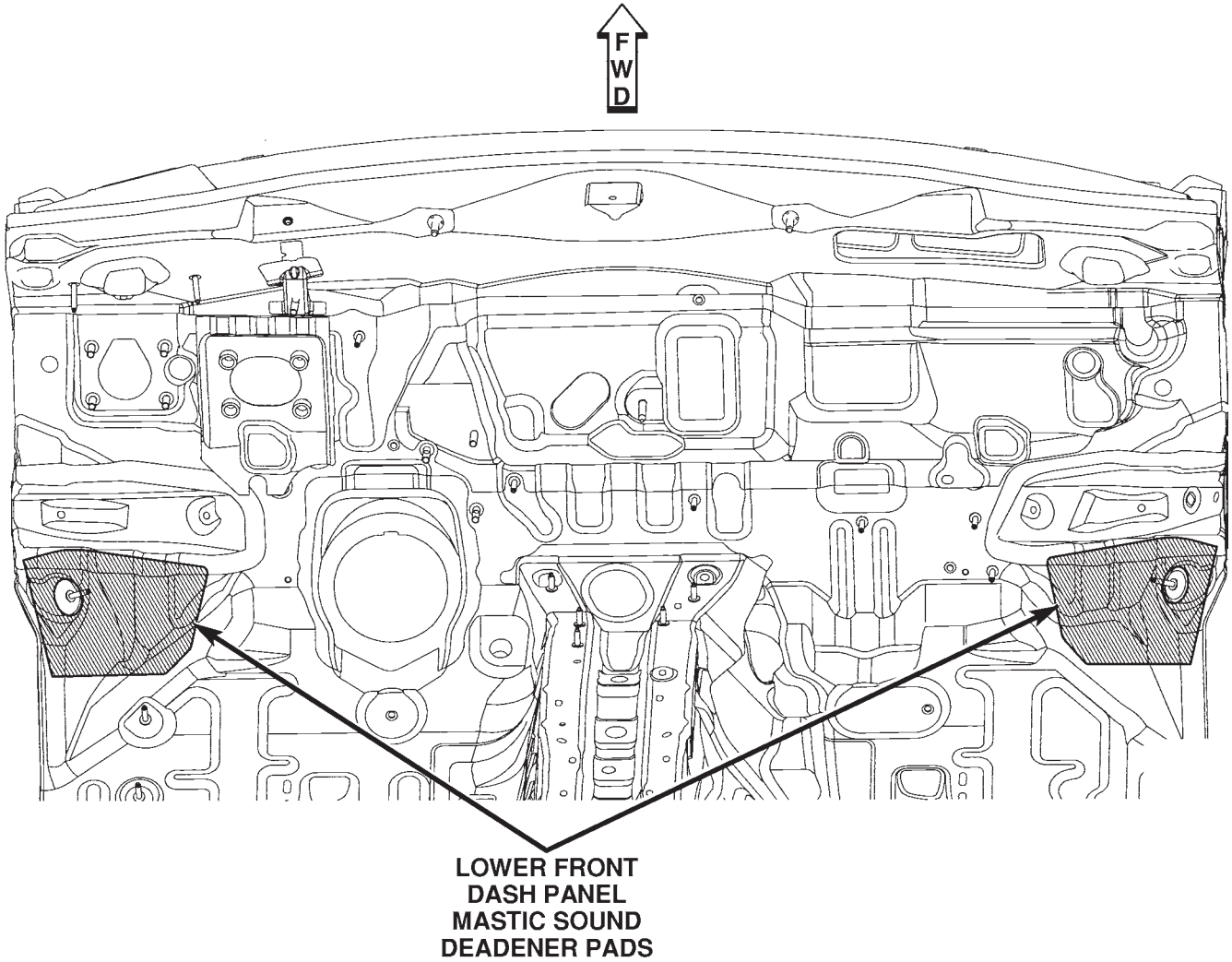

Figure 4. LOWER FRONT DASH PANEL

Back to Index

SOUND DEADENER LOCATIONS

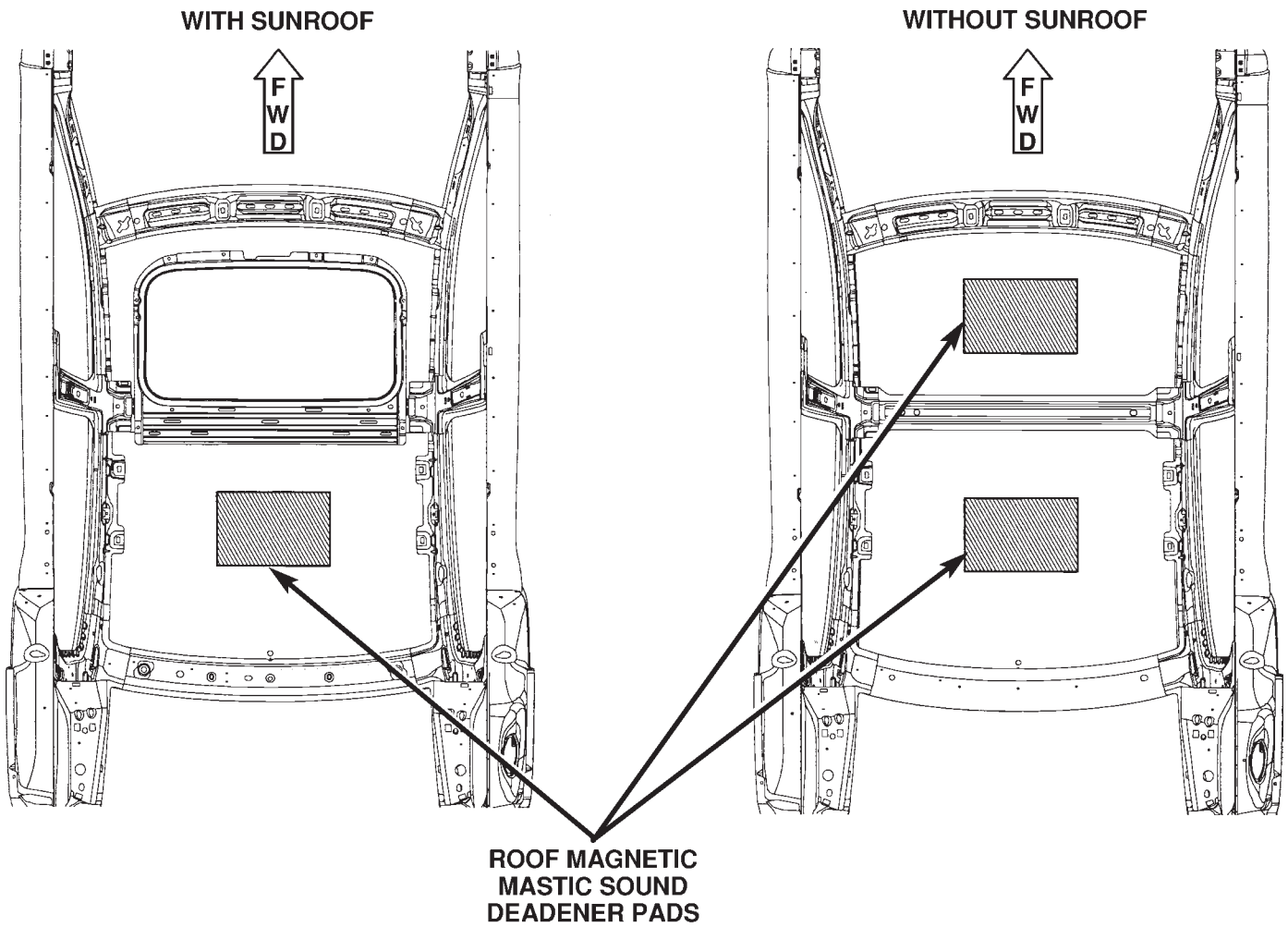

Figure 5. ROOF

Back to Index

SOUND DEADENER LOCATIONS

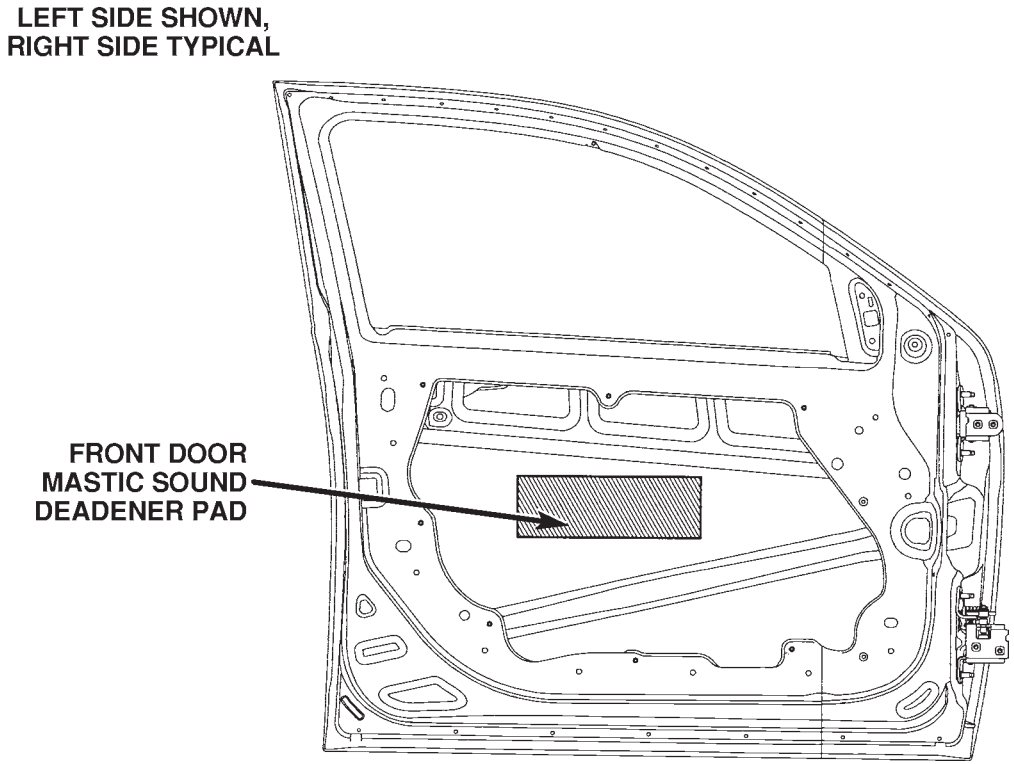

Figure 6. FRONT DOOR

Back to Index

SOUND DEADENER LOCATIONS

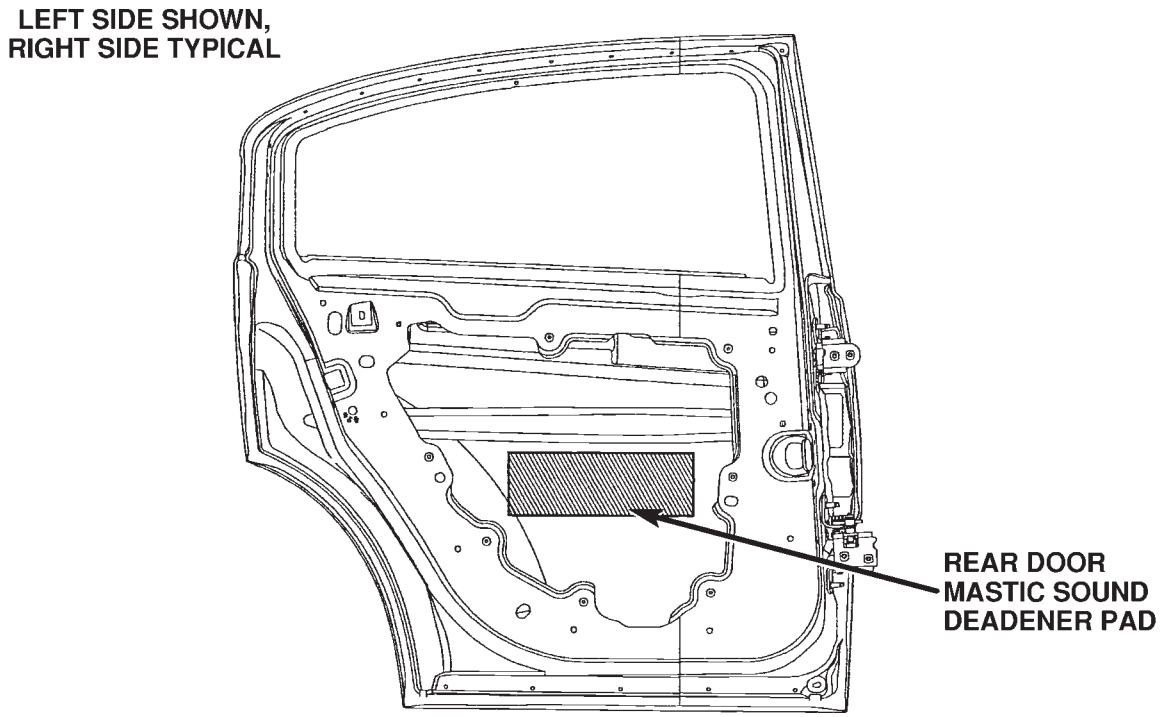

Figure 7. REAR DOOR

Back to Index

SOUND DEADENER LOCATIONS

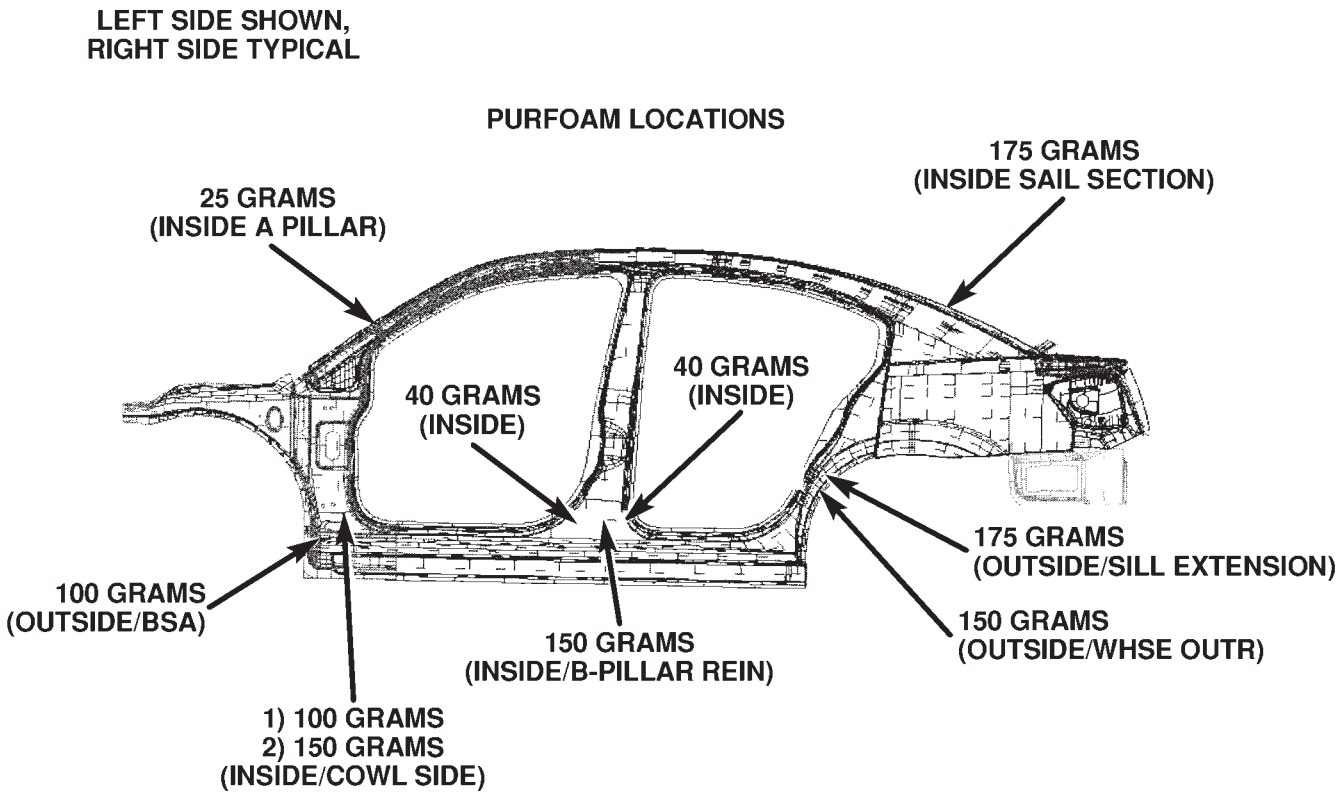

Figure 8. PURFOAM OVERVIEW

Back to Index

CHRYSLER SEBRING/ DODGE AVENGER STRUCTURAL ADHESIVE LOCATIONS

Back to Index

STRUCTURAL ADHESIVE LOCATION INDEX
CHRYSLER SEBRING/DODGE AVENGER

NOTE: Structural Adhesives used are a high strength epoxy and a high expansion lower strength antiflutter material. High strength epoxy is used on all areas.

DESCRIPTION	FIGURE
PLENUM / COWL	1
ENGINE BOX	2
UNDERBODY	3
SIDEMEMBER ASSEMBLY (1 OF 2)	4
SIDEMEMBER ASSEMBLY (2 OF 2)	5
UNDERBODY COMPLETE	6
REAR FLOOR COMPLETE	7

Back to Index

STRUCTURAL ADHESIVE LOCATIONS
CHRYSLER SEBRING/DODGE AVENGER

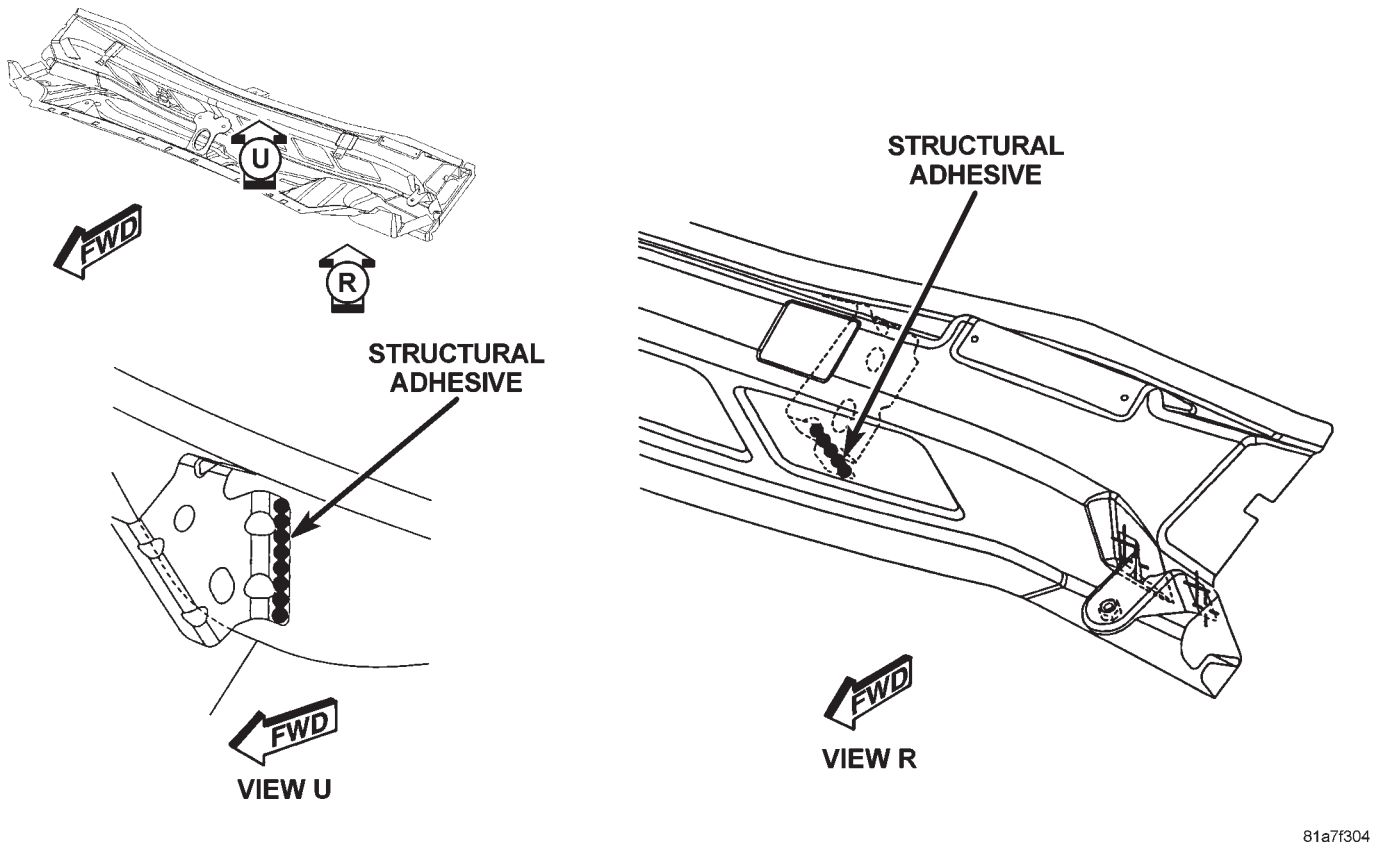

Figure 1. PLENUM/COWL

Back to Index

STRUCTURAL ADHESIVE LOCATIONS
CHRYSLER SEBRING/DODGE AVENGER

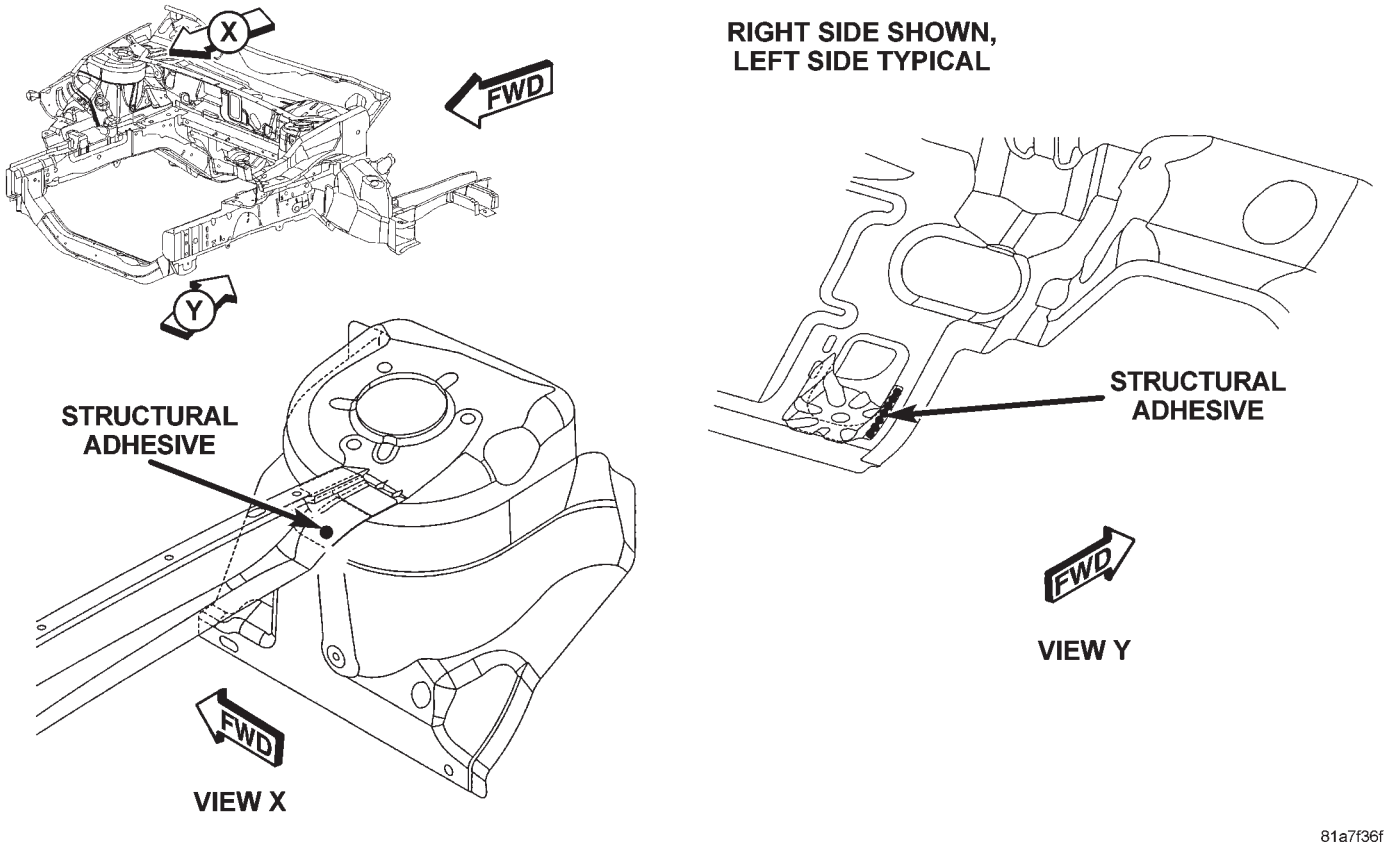

Figure 2. ENGINE BOX

Back to Index

STRUCTURAL ADHESIVE LOCATIONS
CHRYSLER SEBRING/DODGE AVENGER

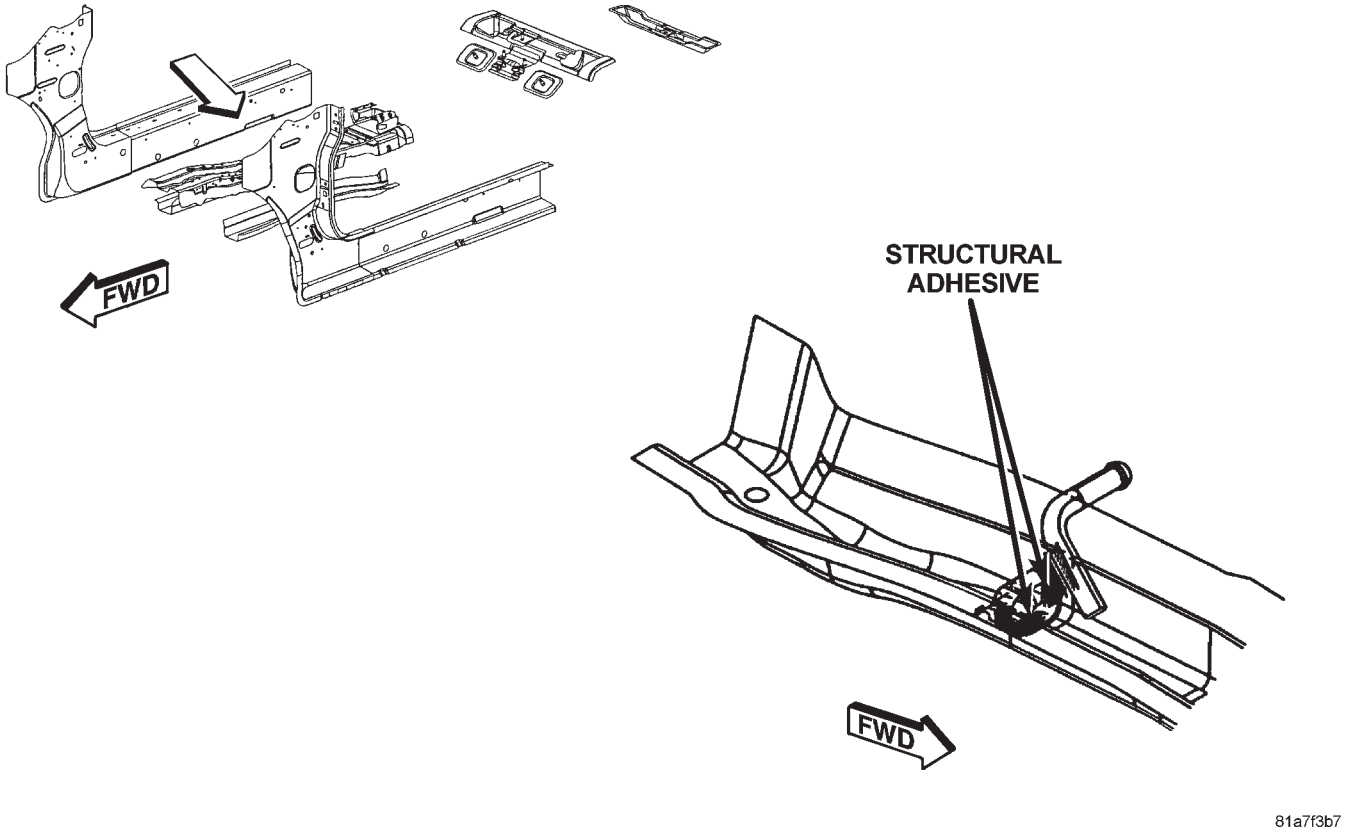

Figure 3. UNDERBODY

Back to Index

STRUCTURAL ADHESIVE LOCATIONS
CHRYSLER SEBRING/DODGE AVENGER

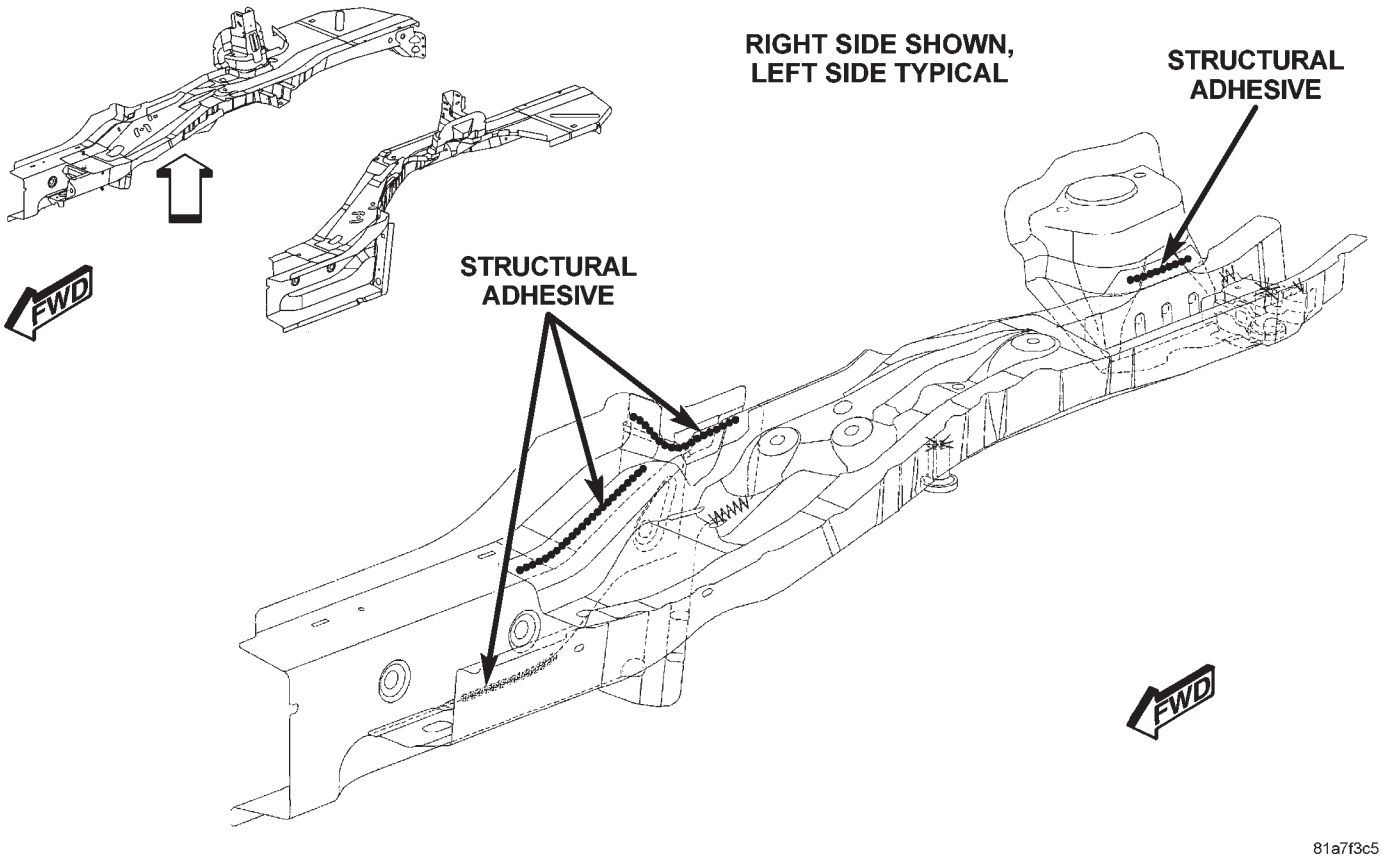

Figure 4. SIDEMEMBER ASSEMBLY (1 OF 2)

Back to Index

STRUCTURAL ADHESIVE LOCATIONS
CHRYSLER SEBRING/DODGE AVENGER

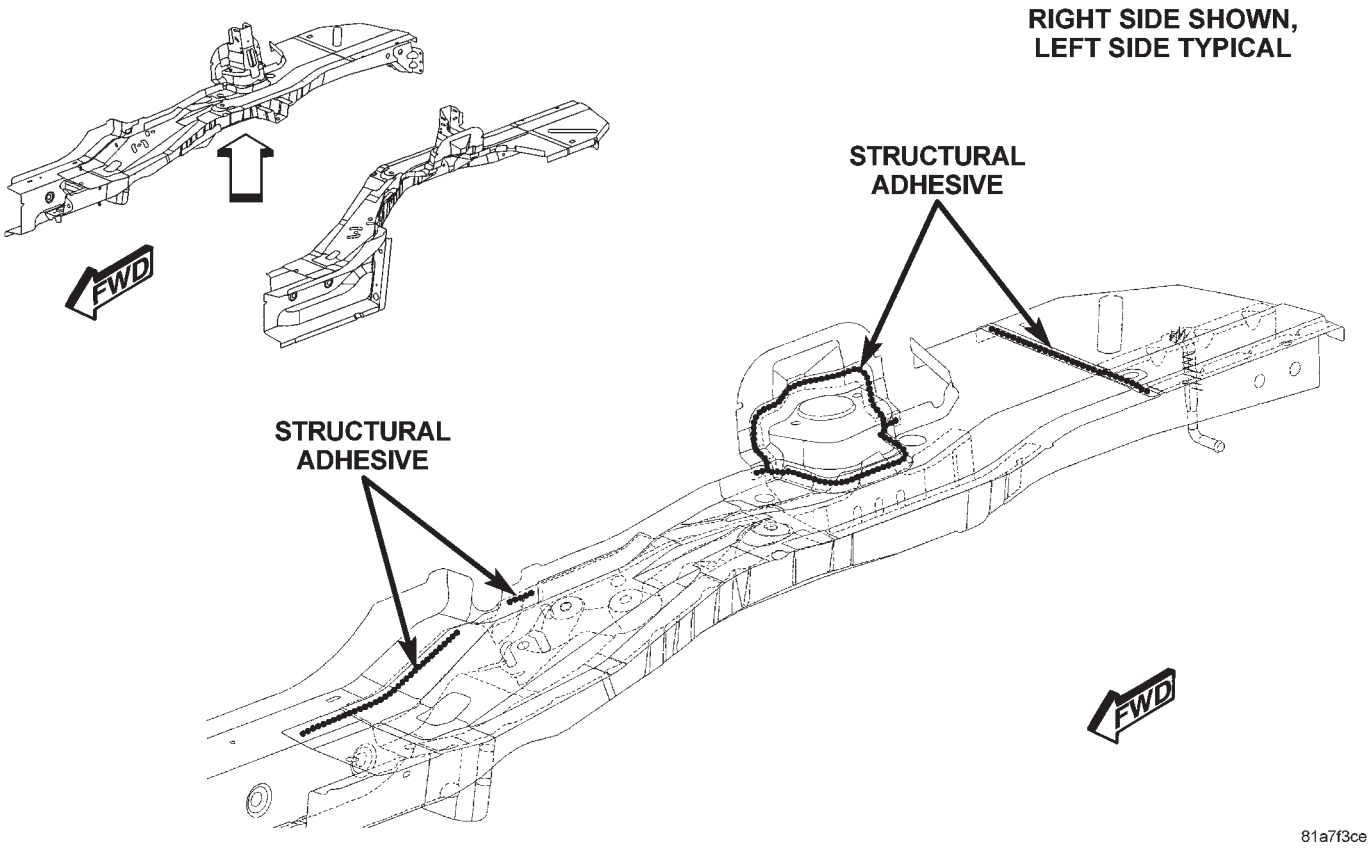

Figure 5. SIDE MEMBER ASSEMBLY (2 OF 2)

Back to Index

STRUCTURAL ADHESIVE LOCATIONS
CHRYSLER SEBRING/DODGE AVENGER

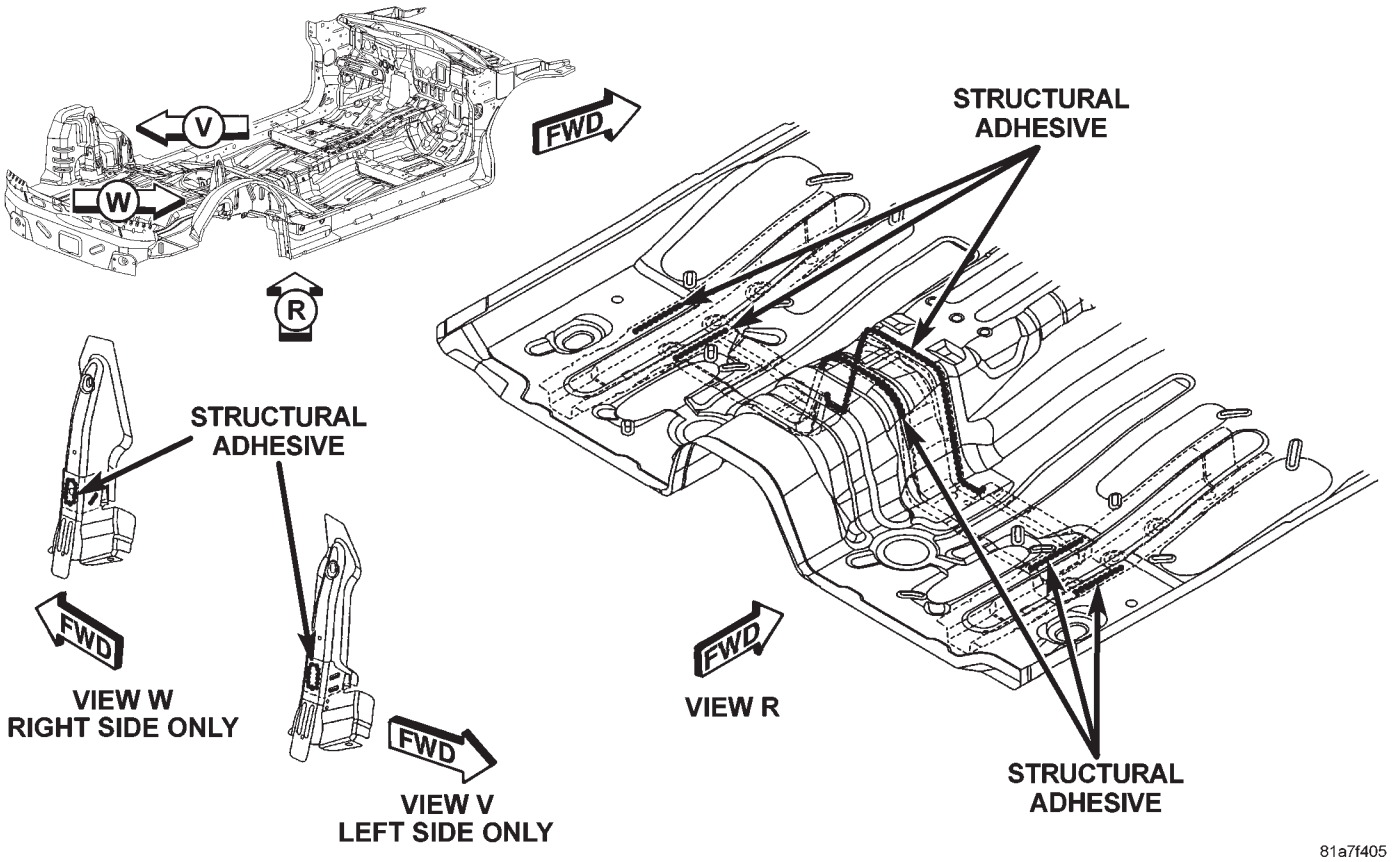

Figure 6. UNDERBODY COMPLETE

Back to Index

STRUCTURAL ADHESIVE LOCATIONS
CHRYSLER SEBRING/DODGE AVENGER

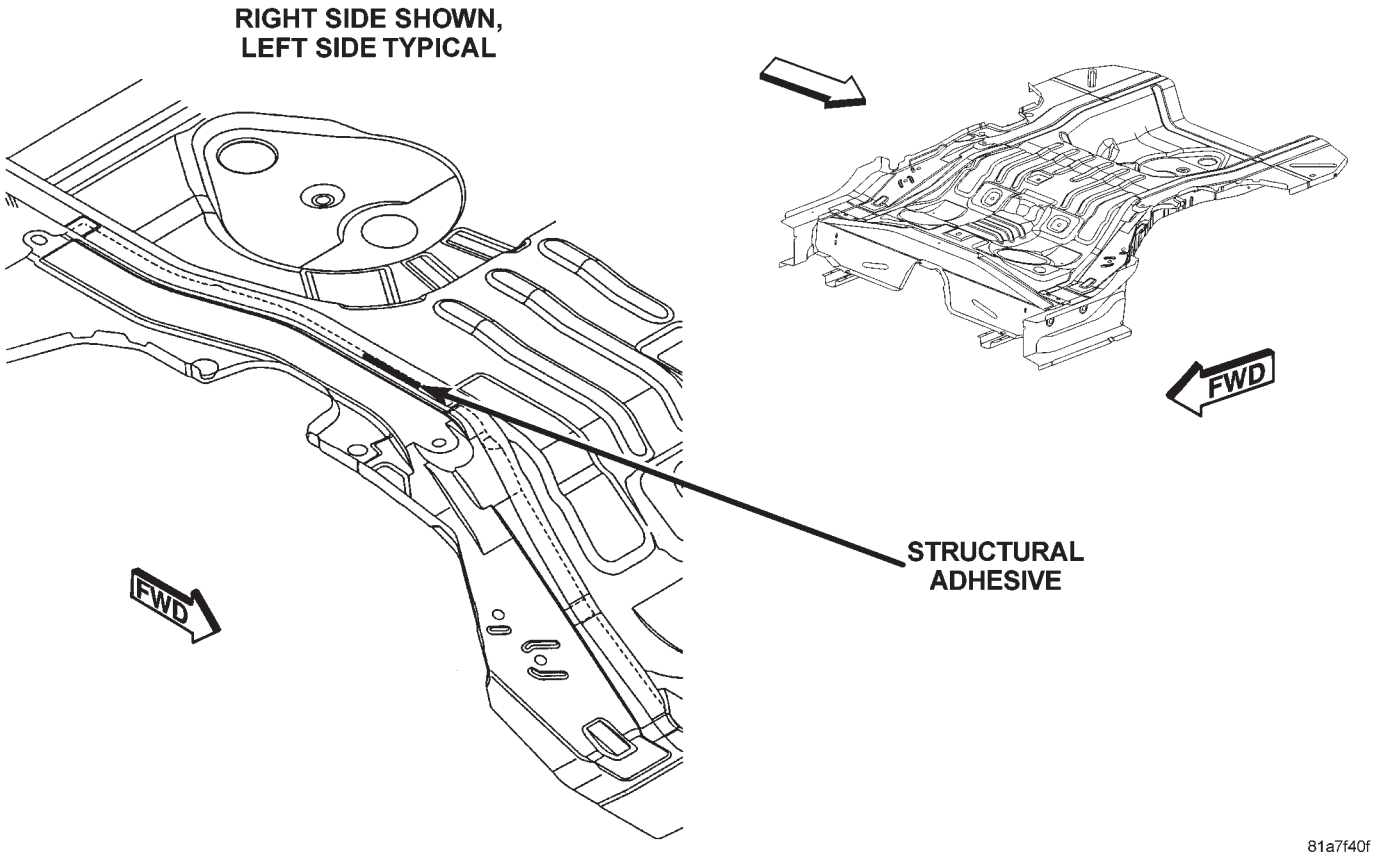

Figure 7. REAR FLOOR COMPLETE

Back to Index

STRUCTURAL ADHESIVE LOCATION INDEX
CHRYSLER SEBRING ONLY

NOTE: Structural Adhesives used are a high strength epoxy and a high expansion lower strength antiflutter material. High strength epoxy is used on all areas.

DESCRIPTION	FIGURE
BODY SIDE APERTURE COMPLETE	1
BODY IN WHITE COMPLETE (1 OF 3)	2
BODY IN WHITE COMPLETE (2 OF 3)	3
BODY IN WHITE COMPLETE (3 OF 3)	4

Back to Index

STRUCTURAL ADHESIVE LOCATIONS
CHRYSLER SEBRING ONLY

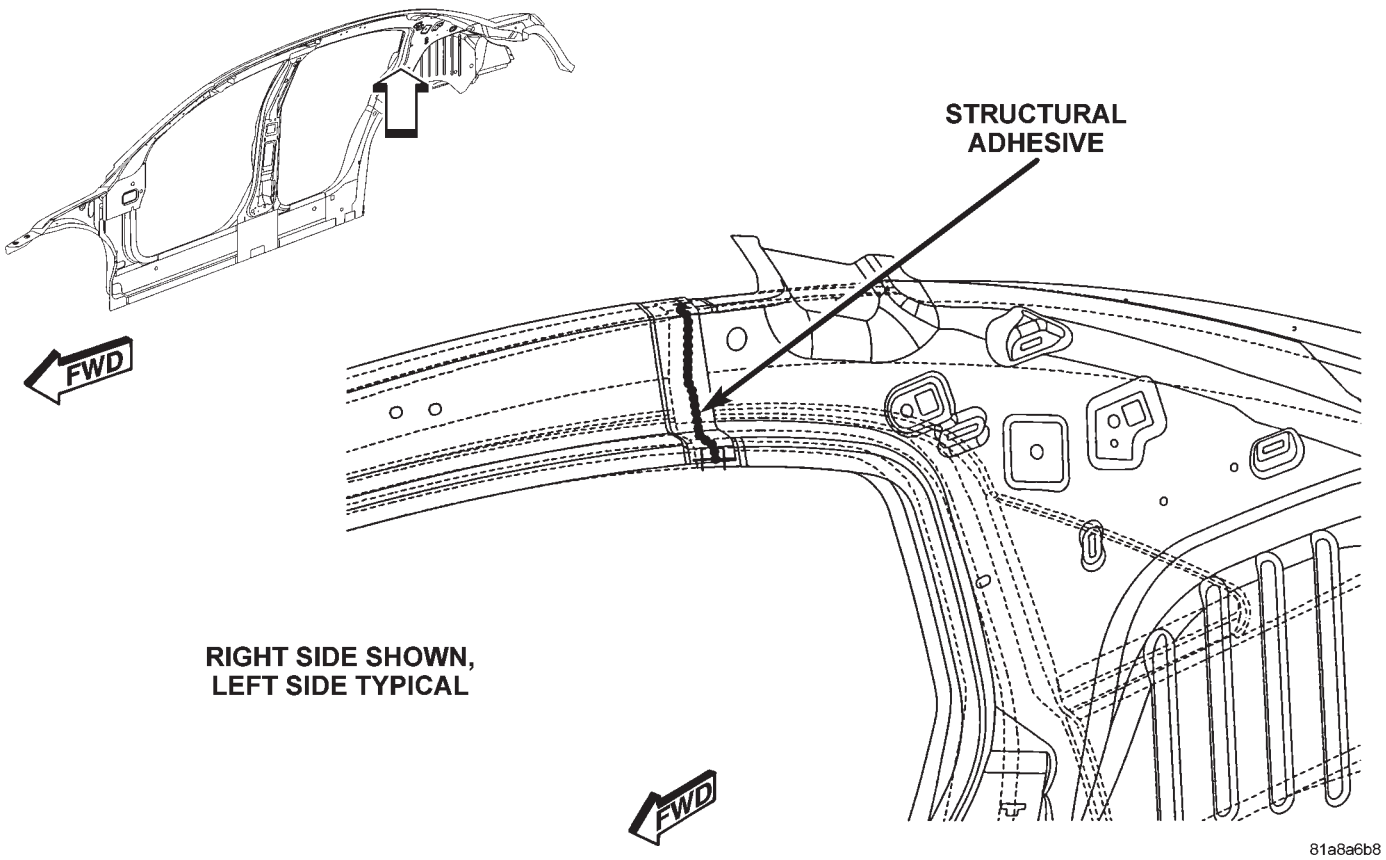

Figure 1. BODY SIDE APERTURE COMPLETE

Back to Index

STRUCTURAL ADHESIVE LOCATIONS
CHRYSLER SEBRING ONLY

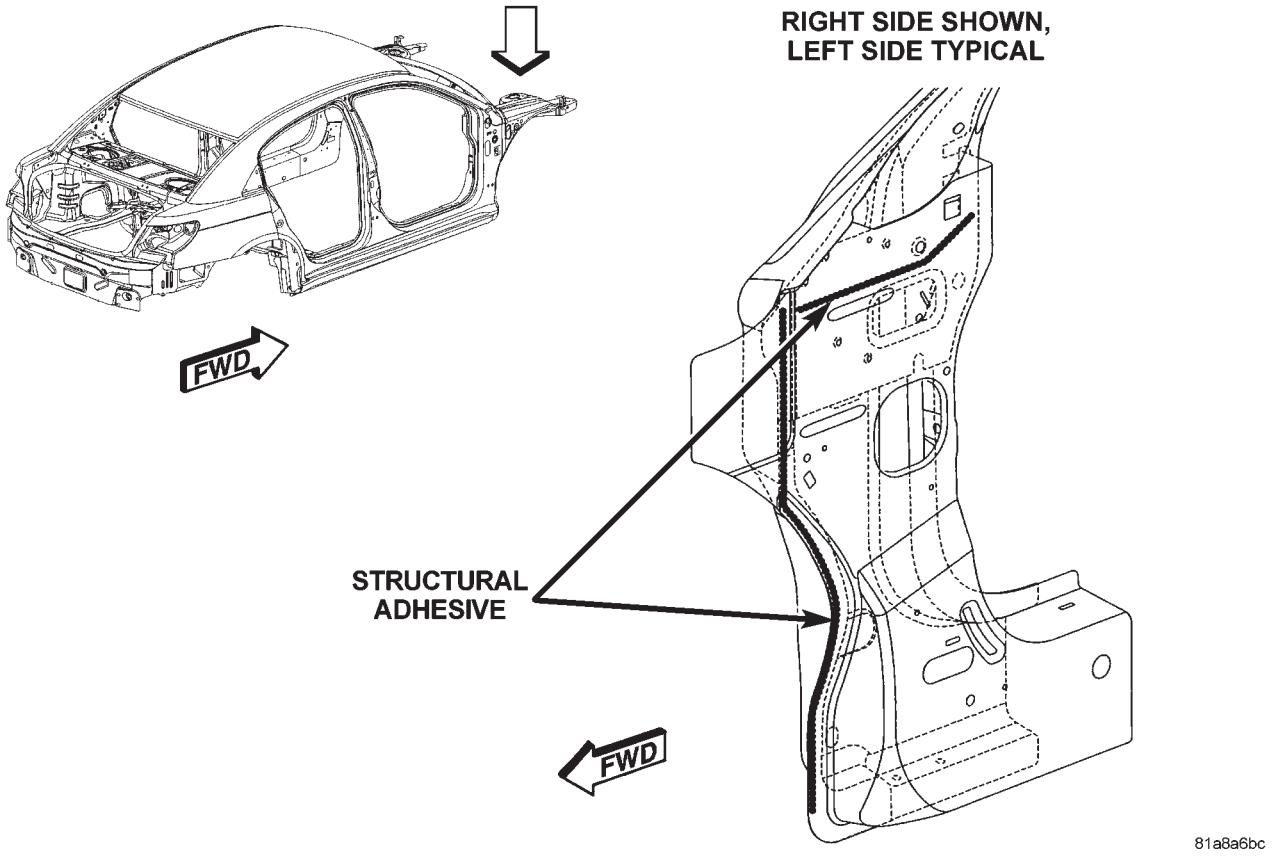

Figure 2. BODY IN WHITE COMPLETE (1 OF 3)

Back to Index

STRUCTURAL ADHESIVE LOCATIONS
CHRYSLER SEBRING ONLY

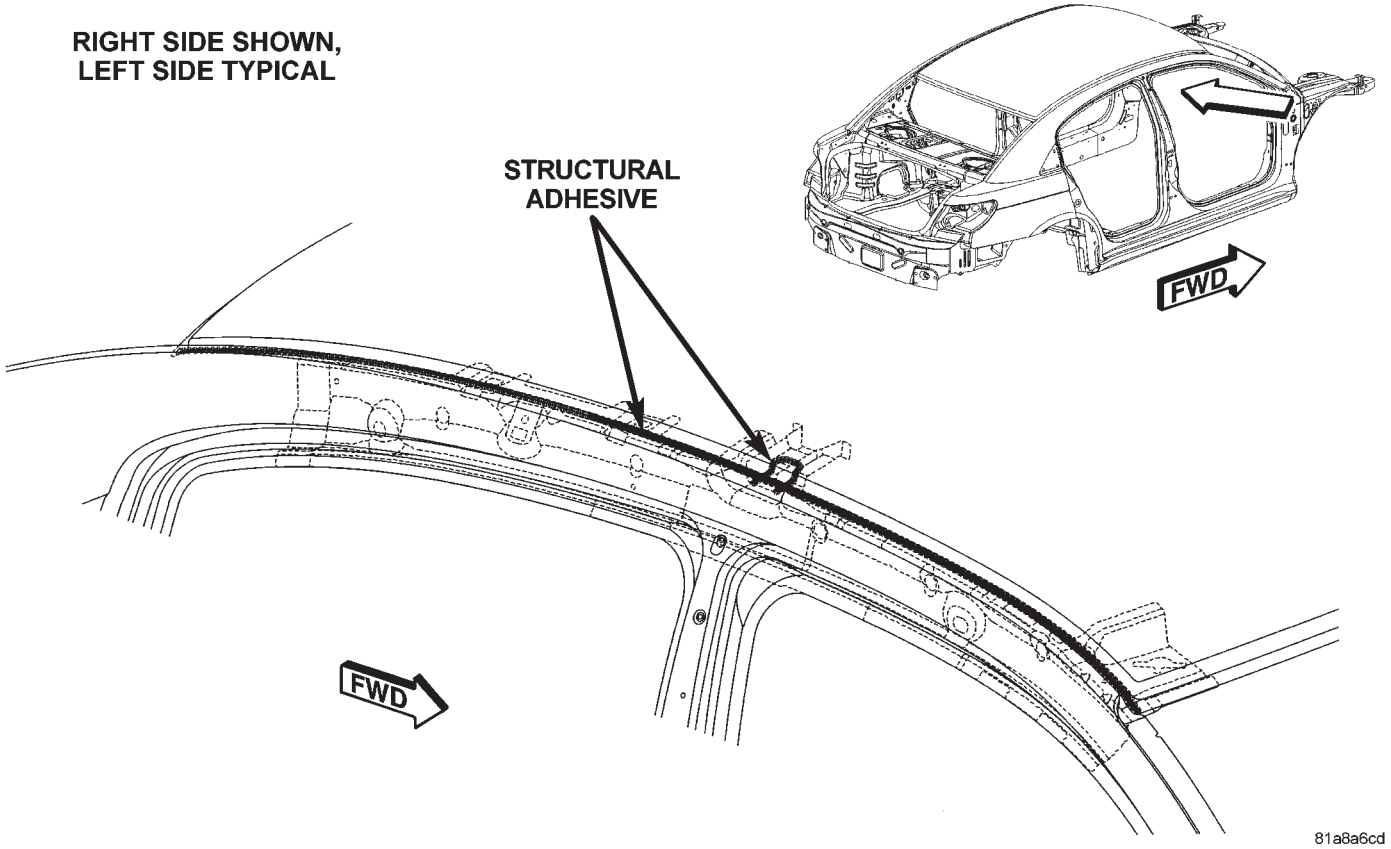

Figure 3. BODY IN WHITE COMPLETE (2 OF 3)

Back to Index

STRUCTURAL ADHESIVE LOCATIONS
CHRYSLER SEBRING ONLY

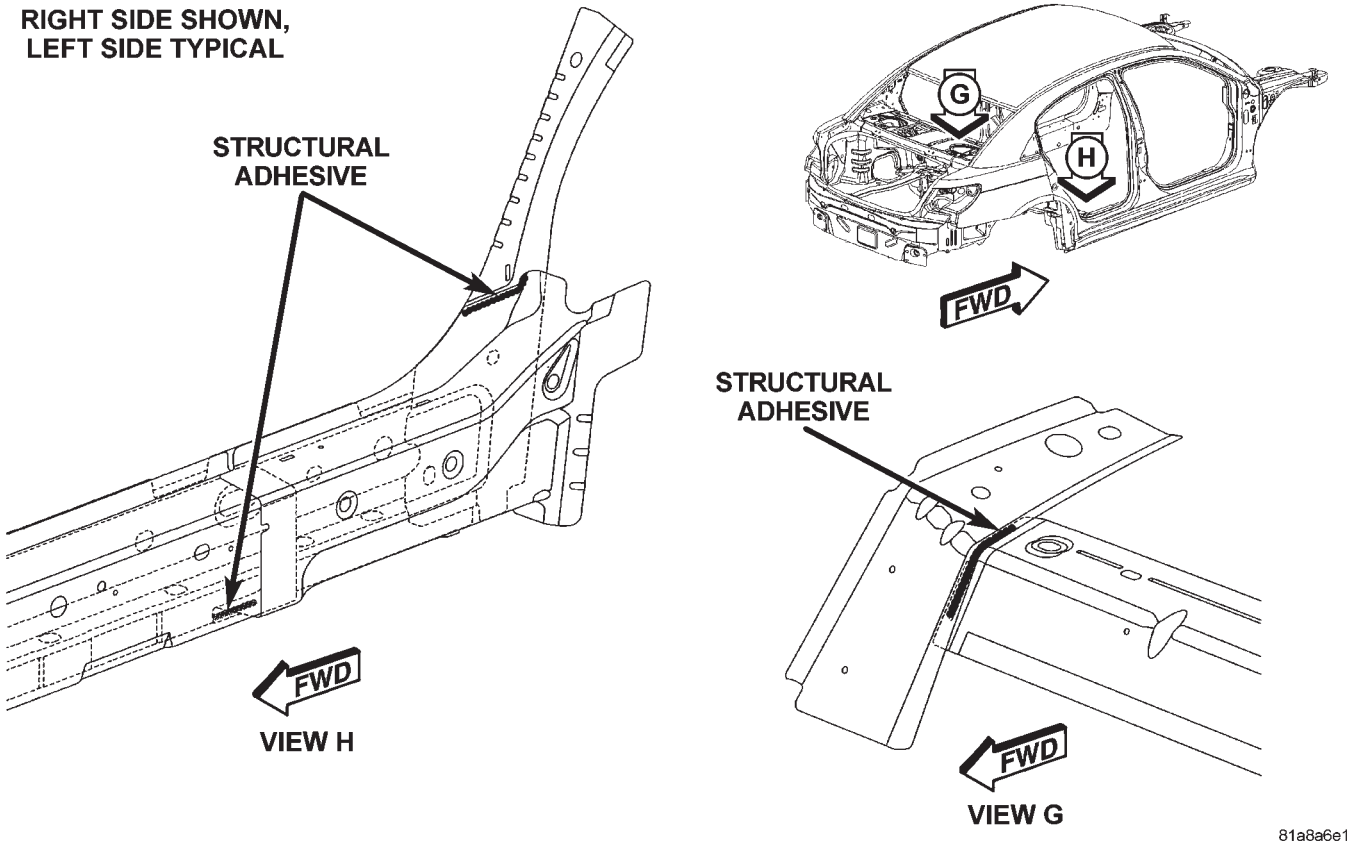

Figure 4. BODY IN WHITE COMPLETE (3 OF 3)

Back to Index

STRUCTURAL ADHESIVE LOCATION INDEX
DODGE AVENGER ONLY

NOTE: Structural Adhesives used are a high strength epoxy and a high expansion lower strength antiflutter material. High strength epoxy is used on all areas.

DESCRIPTION	FIGURE
BODY IN WHITE COMPLETE (1 OF 3)	1
BODY IN WHITE COMPLETE (2 OF 3)	2
BODY IN WHITE COMPLETE (3 OF 3)	3

Back to Index

STRUCTURAL ADHESIVE LOCATIONS
DODGE AVENGER ONLY

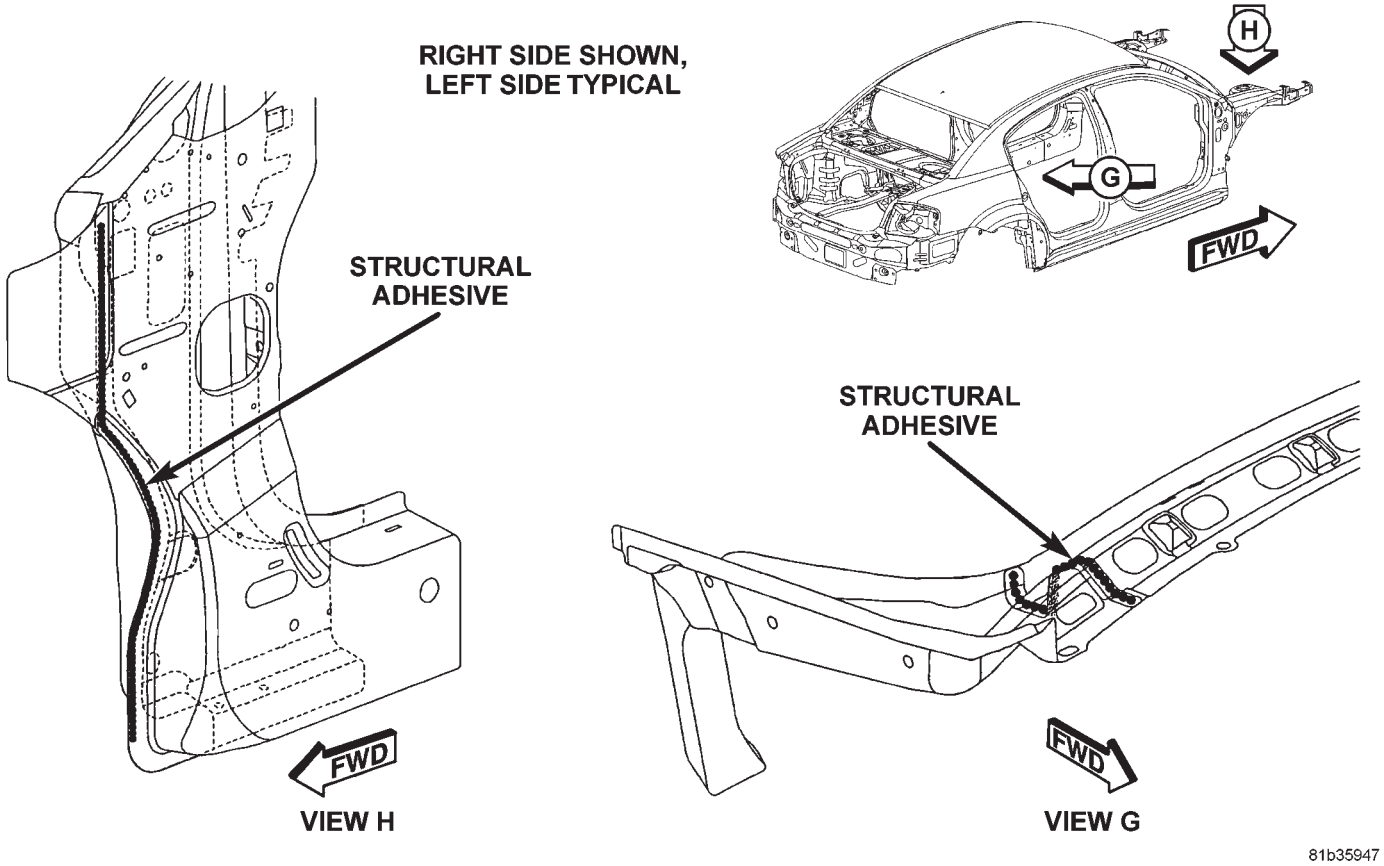

Figure 1. BODY IN WHITE COMPLETE (1 OF 3)

Back to Index

STRUCTURAL ADHESIVE LOCATIONS
DODGE AVENGER ONLY

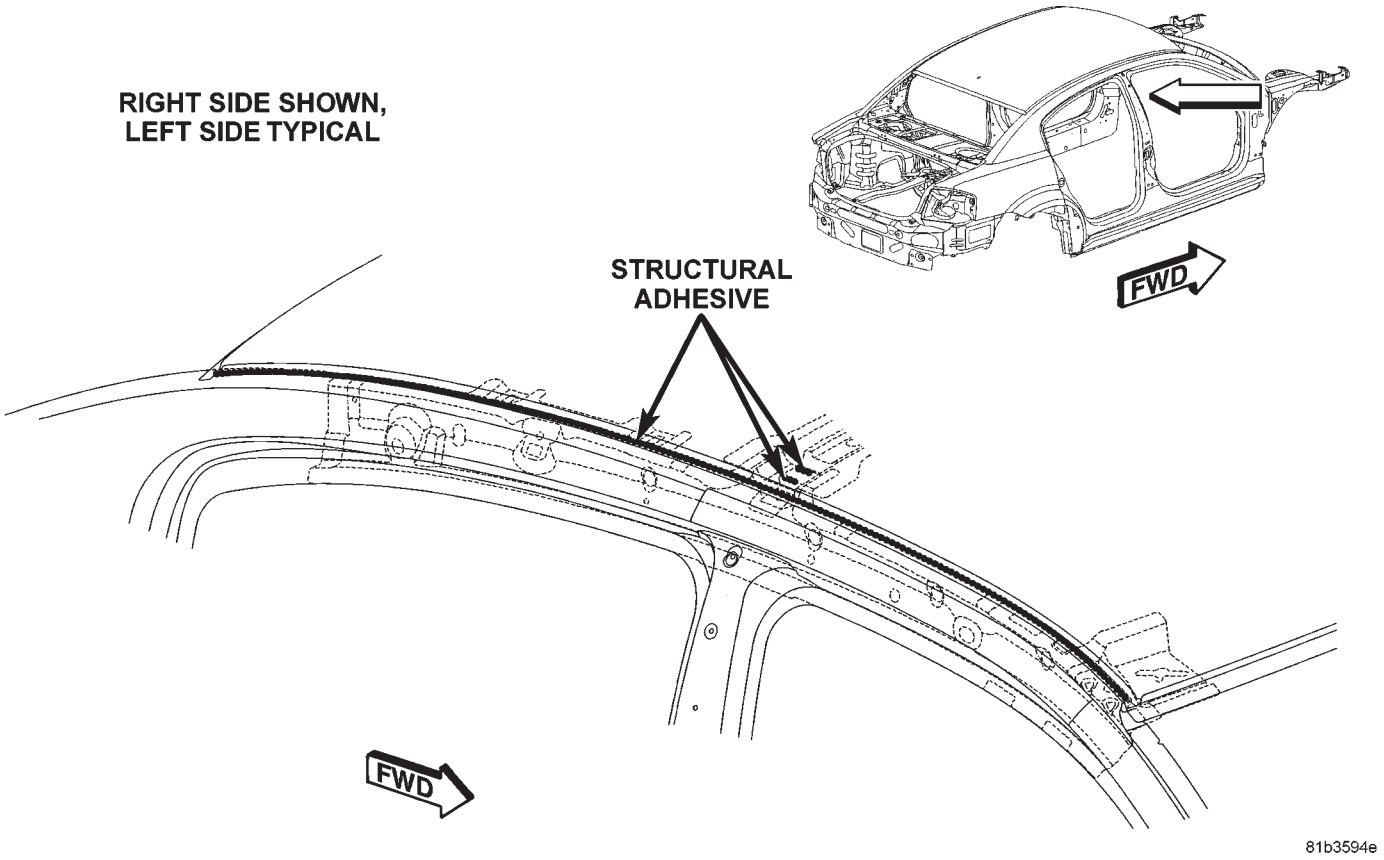

Figure 2. BODY IN WHITE COMPLETE (2 OF 3)

Back to Index

STRUCTURAL ADHESIVE LOCATIONS
DODGE AVENGER ONLY

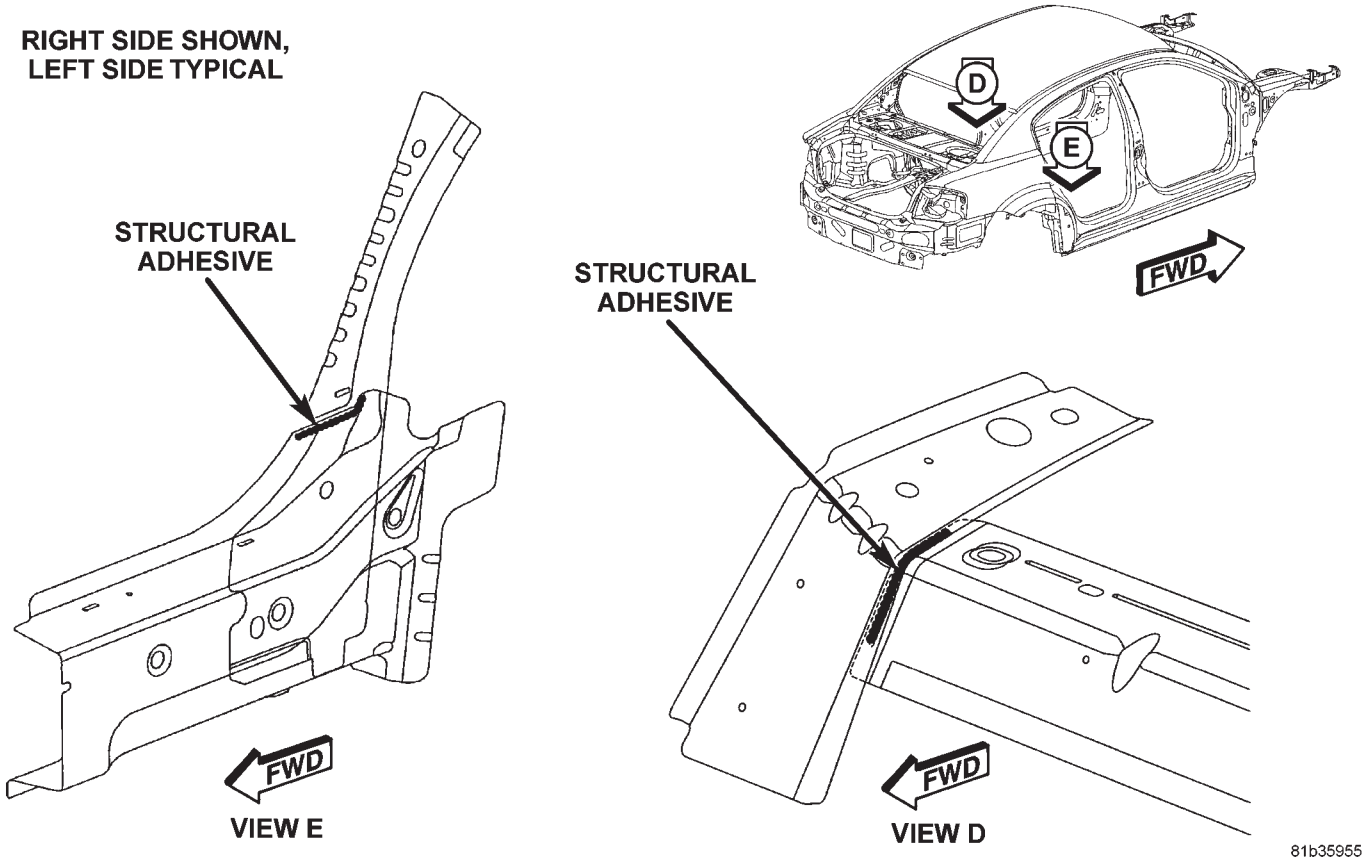

Figure 3. BODY IN WHITE COMPLETE (3 OF 3)

Back to Index

CHRYSLER SEBRING STRUCTURAL ADHESIVE LOCATIONS

Back to Index

STRUCTURAL ADHESIVE LOCATION INDEX

NOTE: Structural Adhesives used are a high strength epoxy and a high expansion lower strength antiflutter material. High strength epoxy is used on all areas.

DESCRIPTION	FIGURE
PLENUM / COWL	1
ENGINE BOX	2
UNDERBODY	3
SIDEMEMBER ASSEMBLY	4
REAR FLOOR COMPLETE	5
UNDERBODY COMPLETE (1 OF 3)	6
UNDERBODY COMPLETE (2 OF 3)	7
UNDERBODY COMPLETE (3 OF 3)	8
BODY SIDE APERTURE (1 OF 3)	9
BODY SIDE APERTURE (2 OF 3)	10
BODY SIDE APERTURE (3 OF 3)	11
BODY SIDE APERTURE INNER	12
BODY SIDE APERTURE OUTER	13
BODY SIDE APERTURE COMPLETE (1 OF 2)	14
BODY SIDE APERTURE COMPLETE (2 OF 2)	15
BODY IN WHITE COMPLETE	16

Back to Index

STRUCTURAL ADHESIVE LOCATIONS

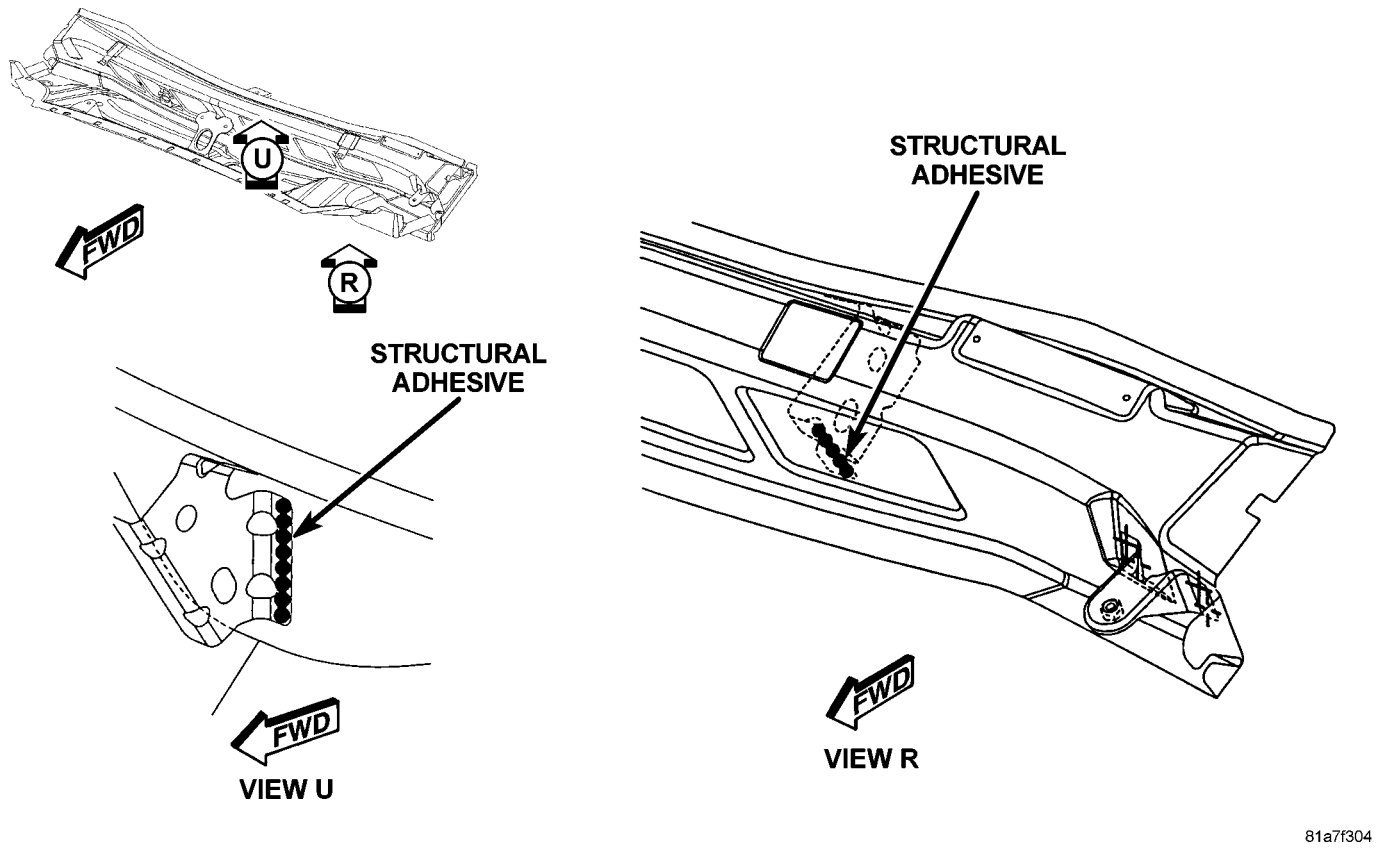

Figure 1. PLENUM/COWL

Back to Index

STRUCTURAL ADHESIVE LOCATIONS

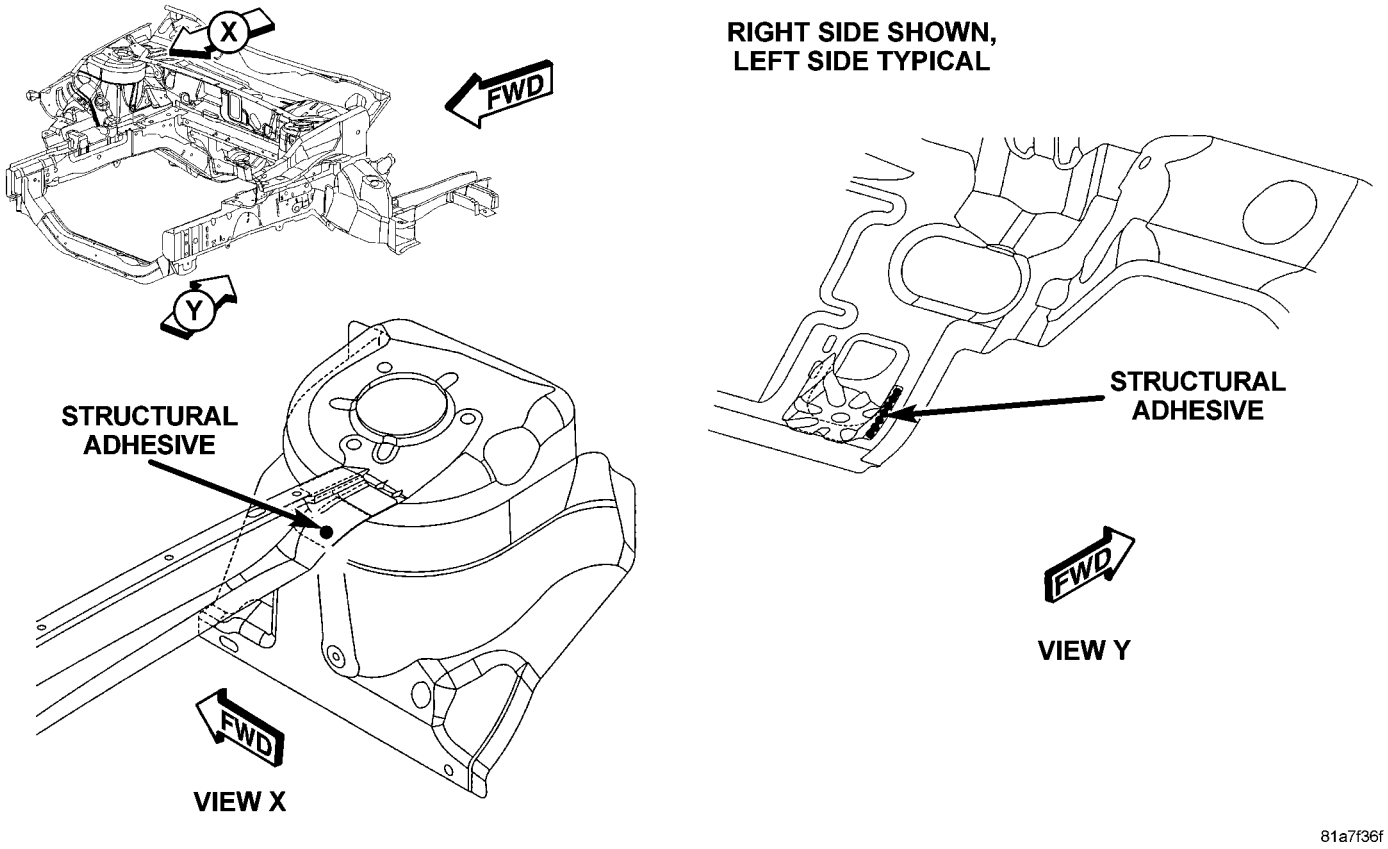

Figure 2. ENGINE BOX

Back to Index

STRUCTURAL ADHESIVE LOCATIONS

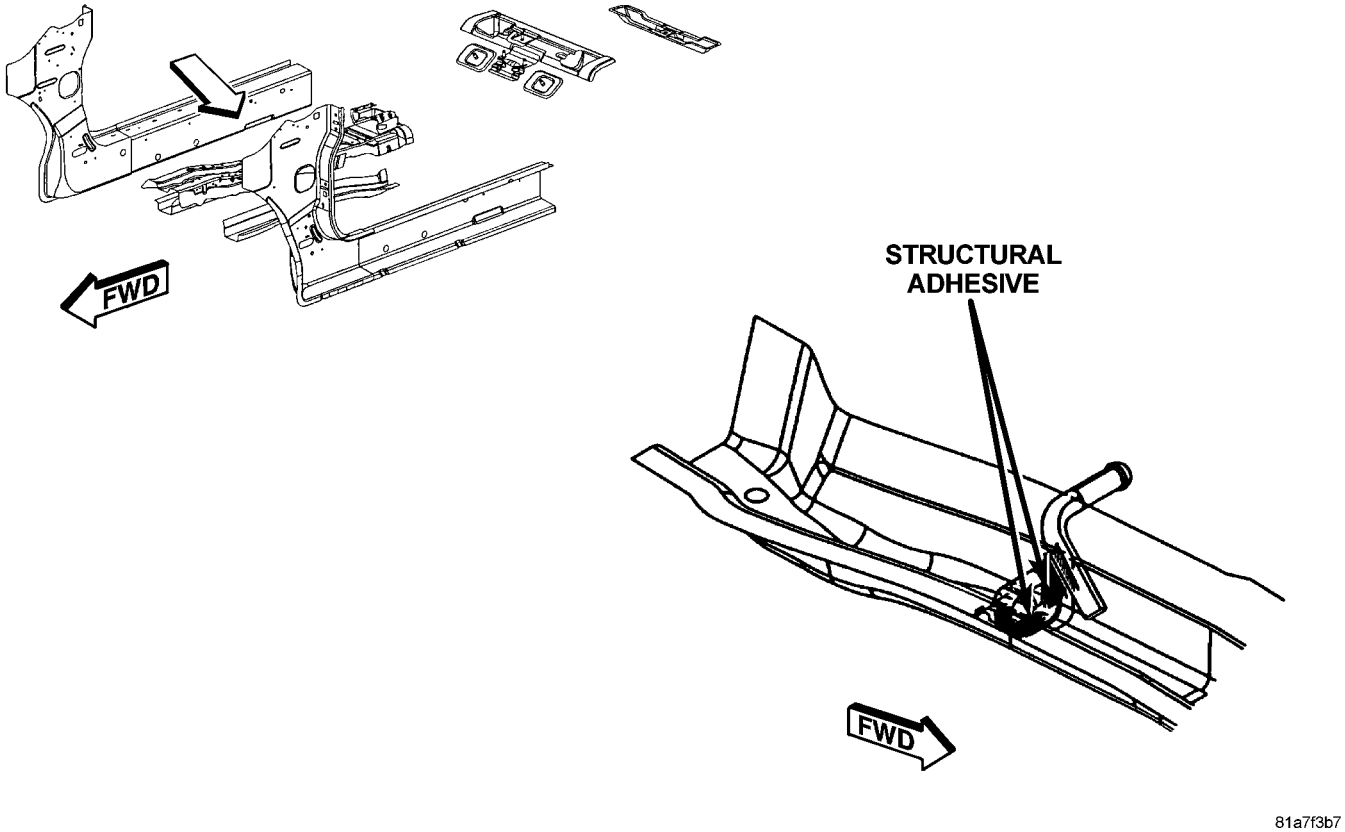

Figure 3. UNDERBODY

Back to Index

STRUCTURAL ADHESIVE LOCATIONS

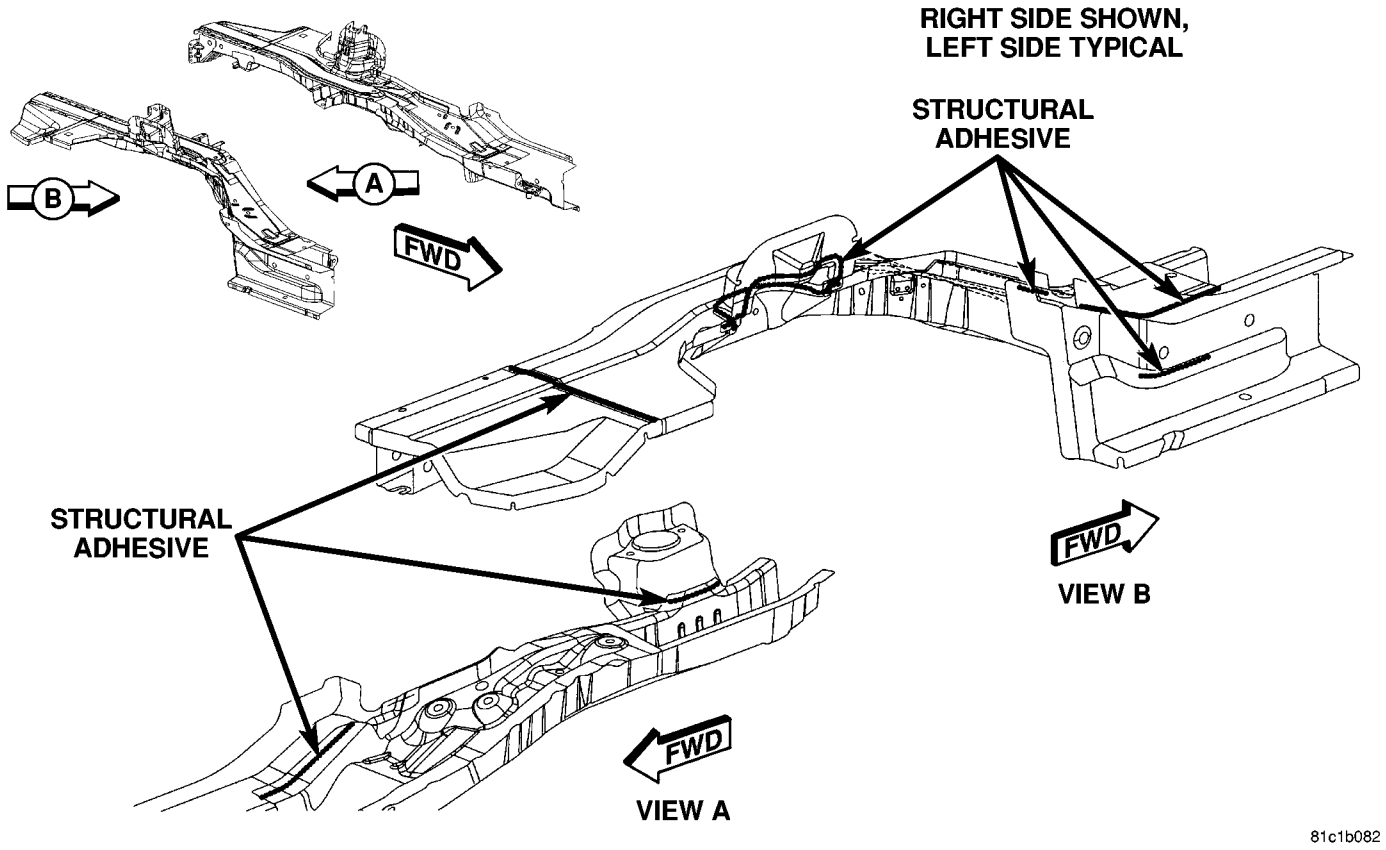

Figure 4. SIDE MEMBER ASSEMBLY

Back to Index

STRUCTURAL ADHESIVE LOCATIONS

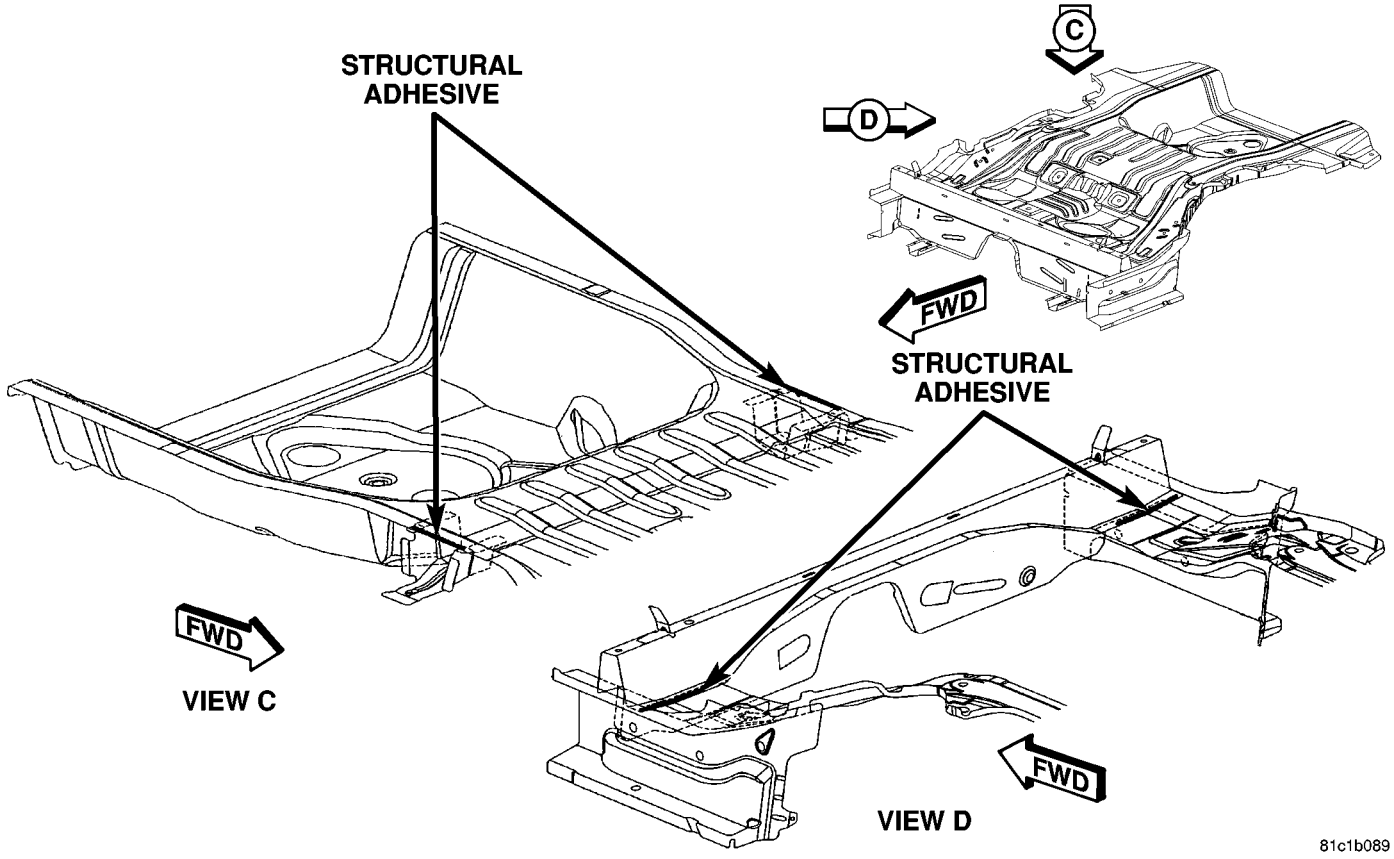

Figure 5. REAR FLOOR COMPLETE

Back to Index

STRUCTURAL ADHESIVE LOCATIONS

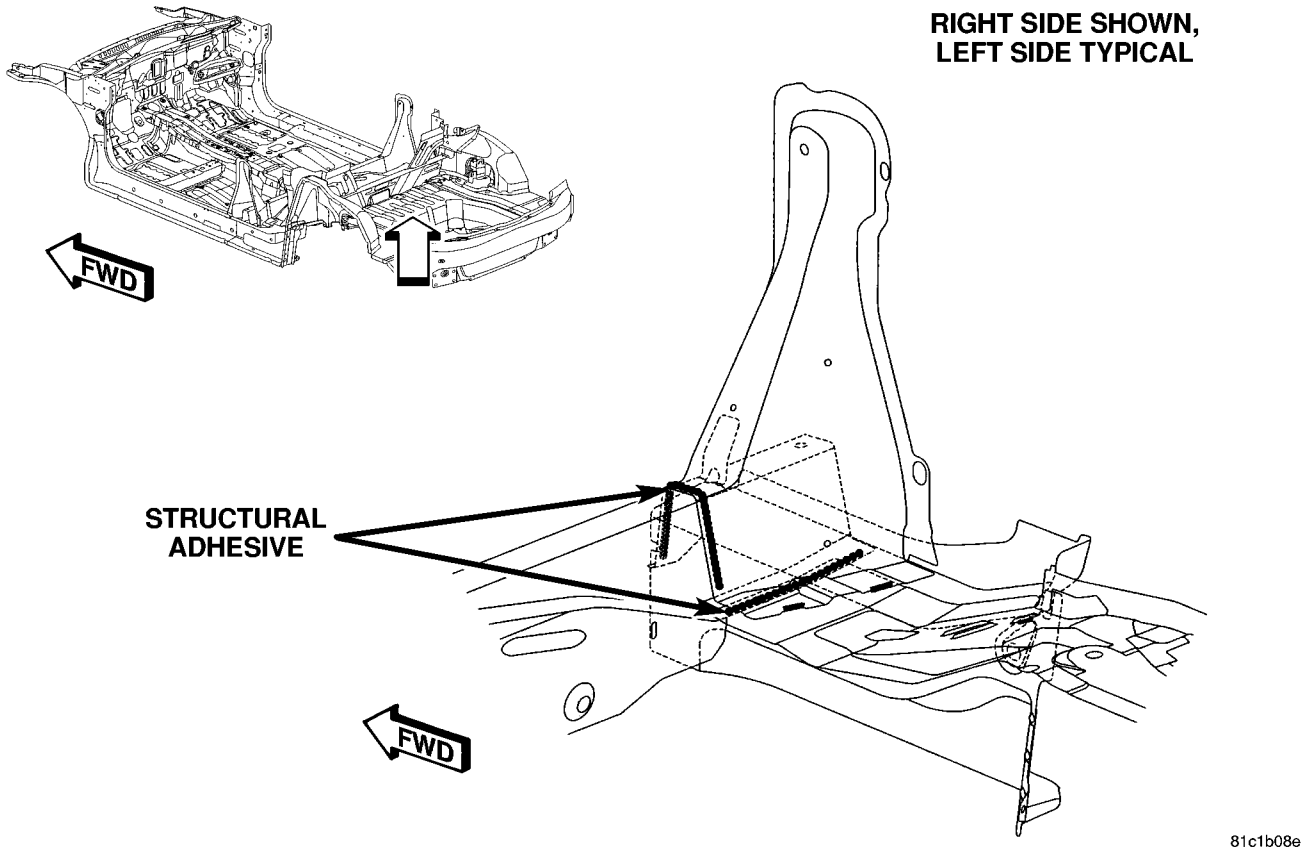

Figure 6. UNDERBODY COMPLETE (1 OF 3)

Back to Index

STRUCTURAL ADHESIVE LOCATIONS

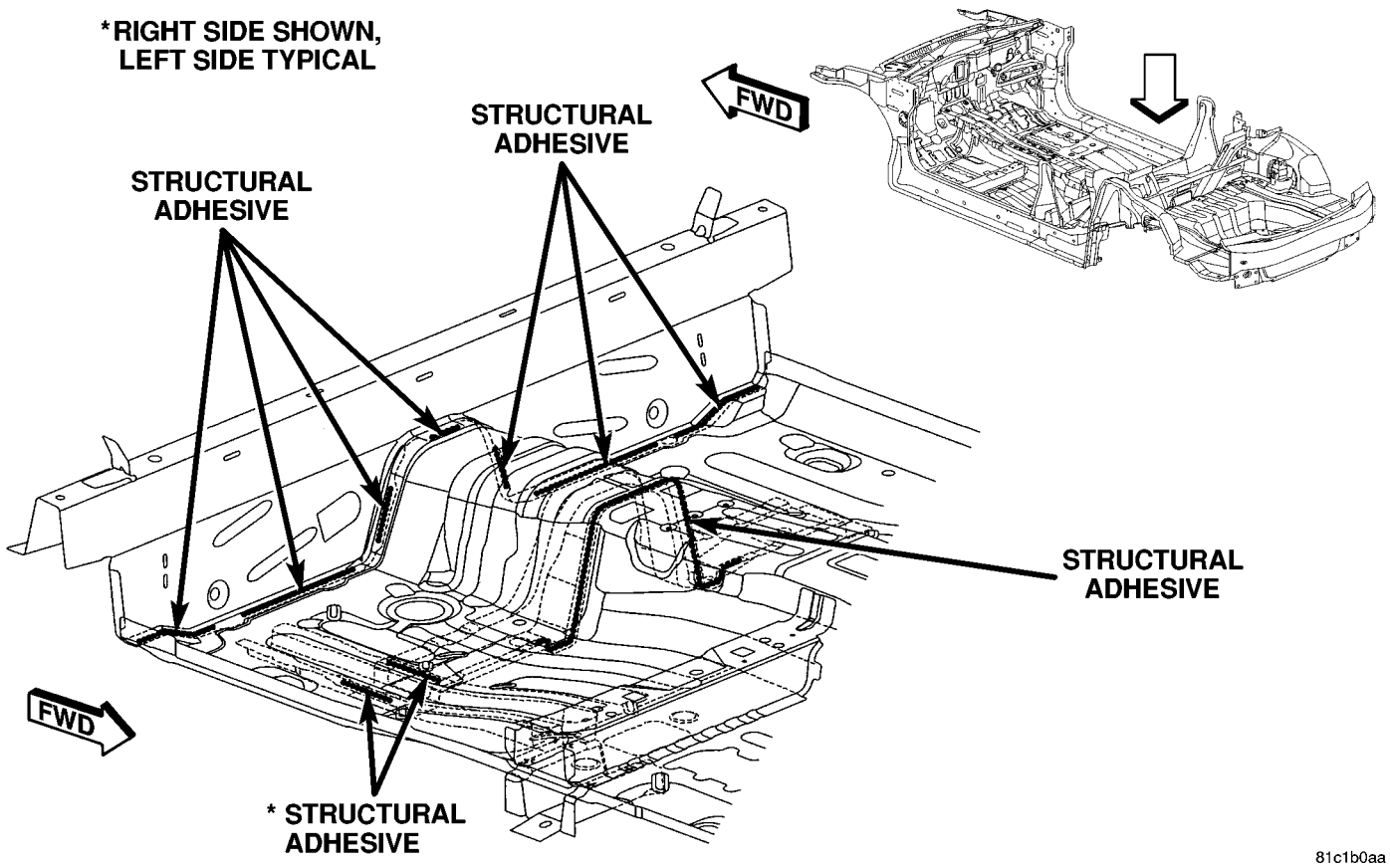

Figure 7. UNDERBODY COMPLETE (2 OF 3)

Back to Index

STRUCTURAL ADHESIVE LOCATIONS

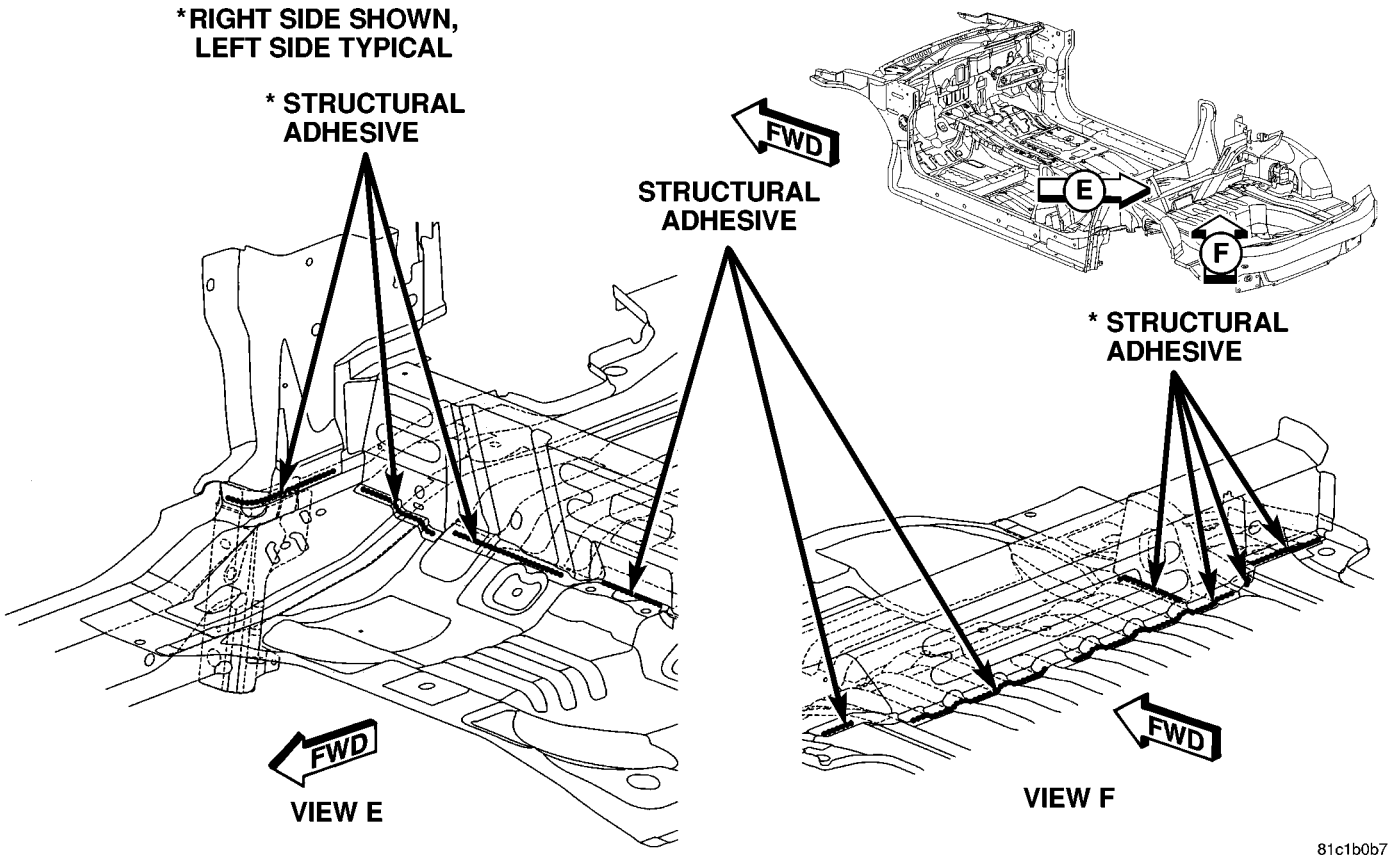

Figure 8. UNDERBODY COMPLETE (3 OF 3)

Back to Index

STRUCTURAL ADHESIVE LOCATIONS

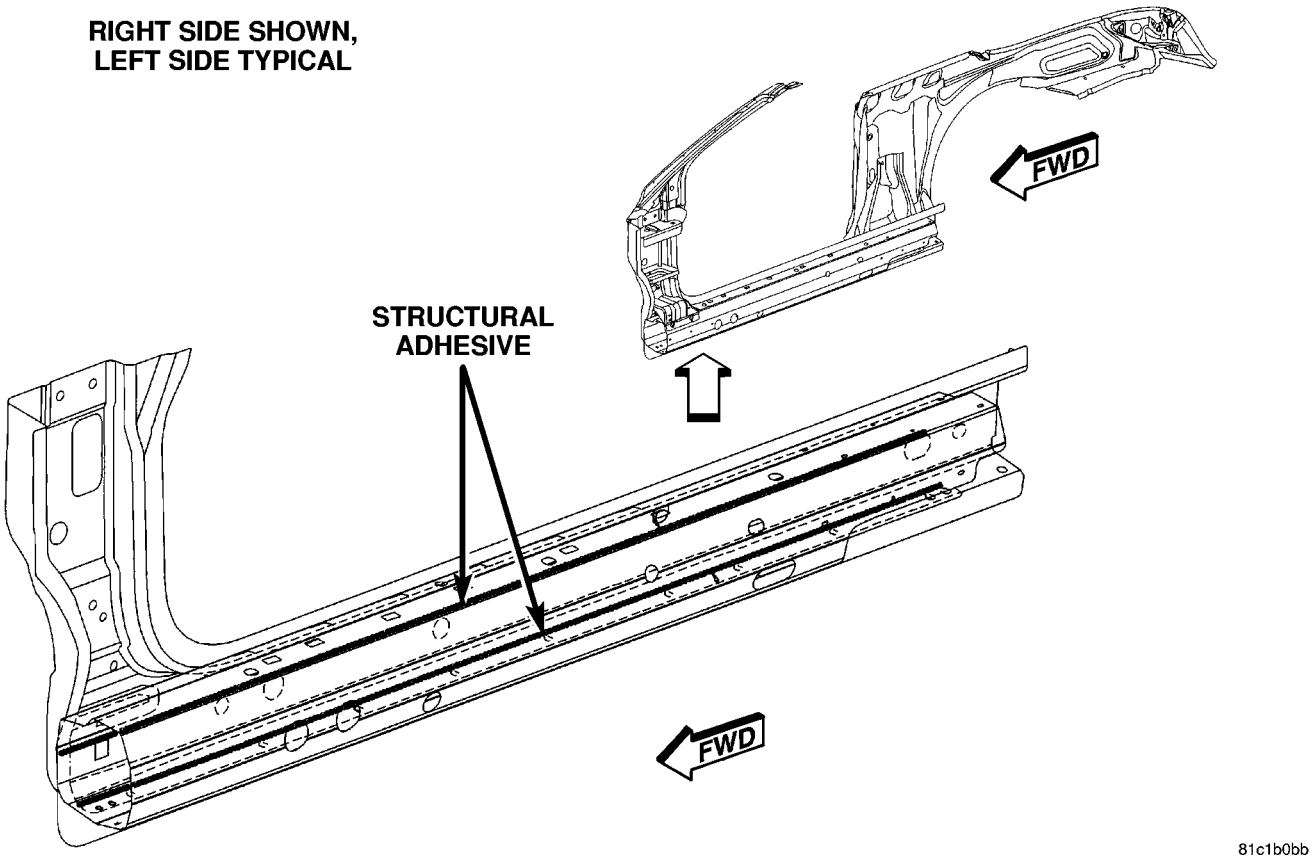

Figure 9. BODY SIDE APERTURE (1 OF 3)

Back to Index

STRUCTURAL ADHESIVE LOCATIONS

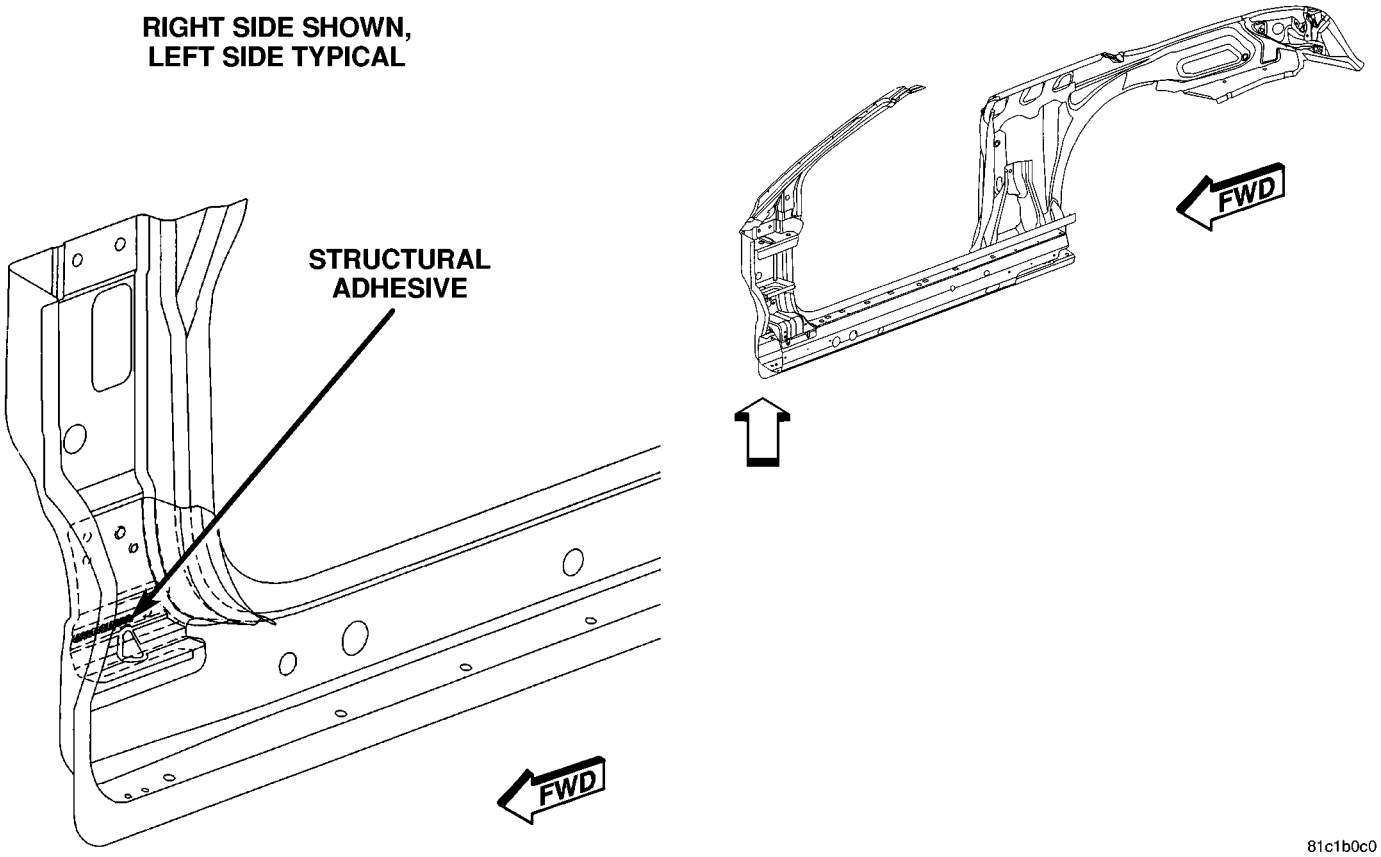

Figure 10. BODY SIDE APERTURE (2 OF 3)

Back to Index

STRUCTURAL ADHESIVE LOCATIONS

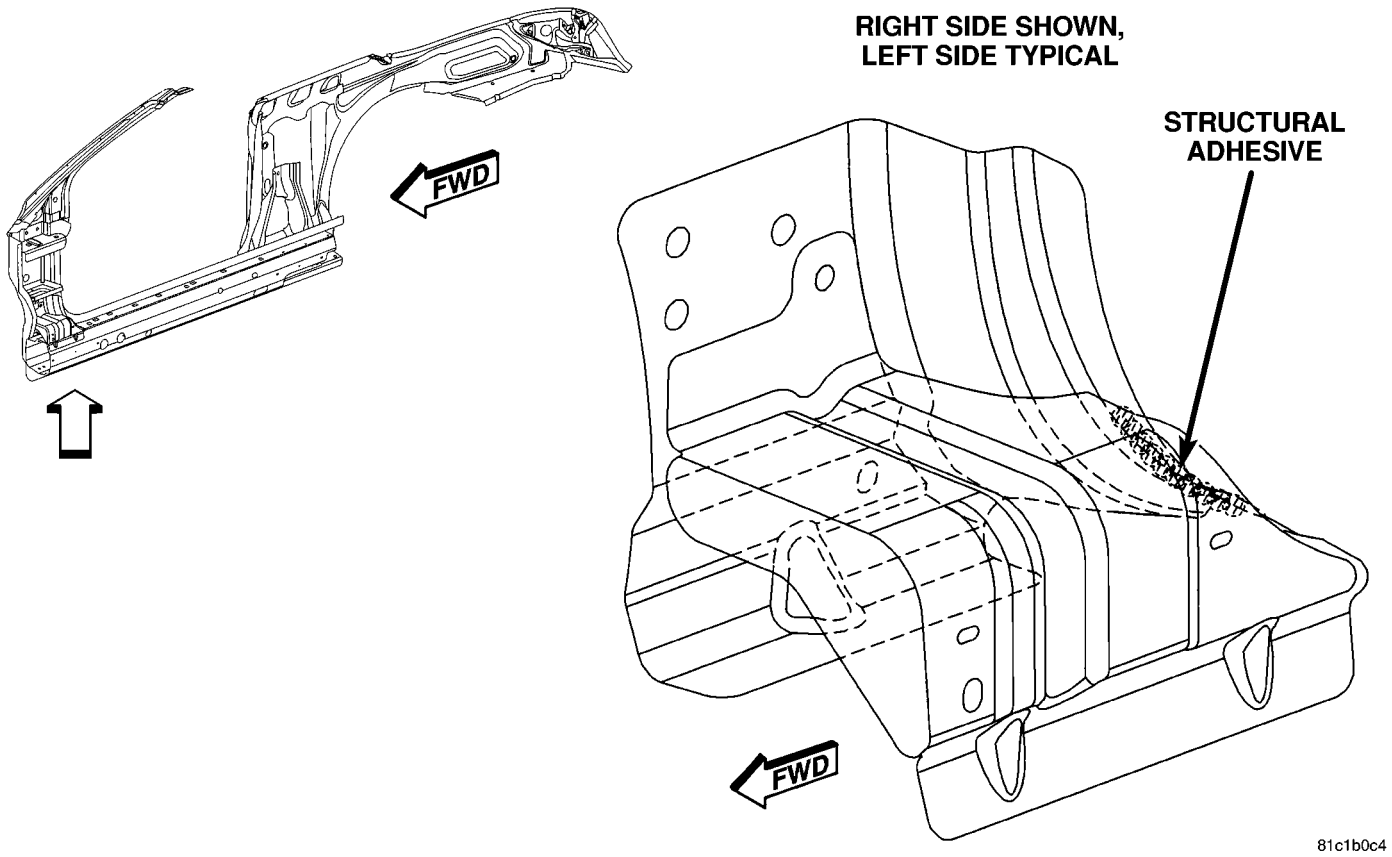

Figure 11. BODY SIDE APERTURE (3 OF 3)

Back to Index

STRUCTURAL ADHESIVE LOCATIONS

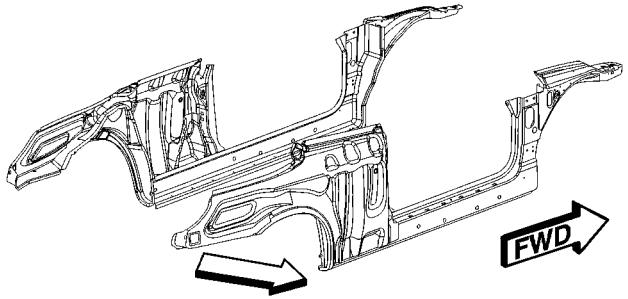

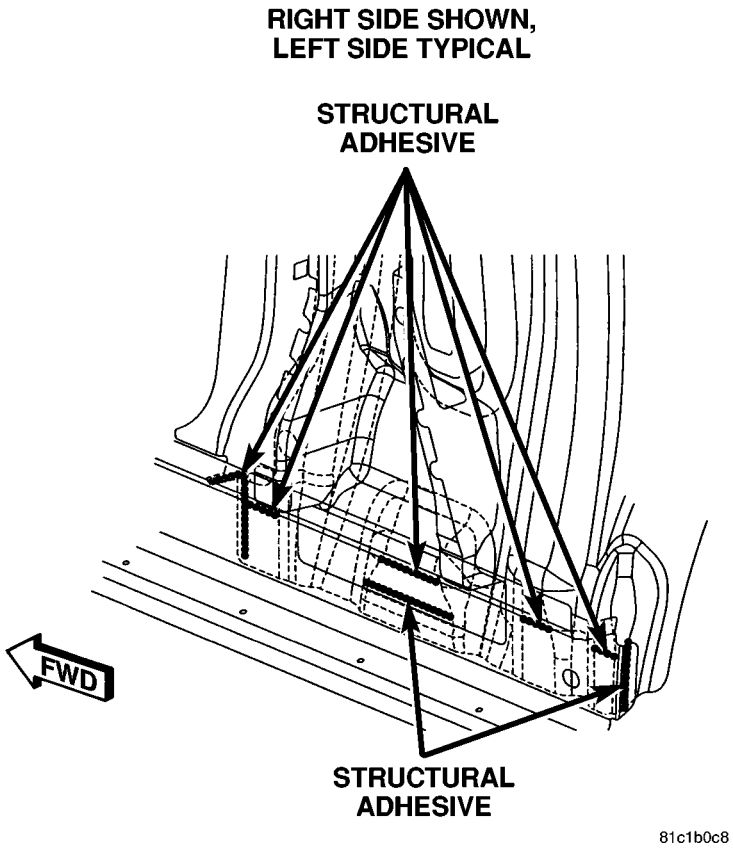

Figure 12. BODY SIDE APERTURE INNER

Back to Index

STRUCTURAL ADHESIVE LOCATIONS

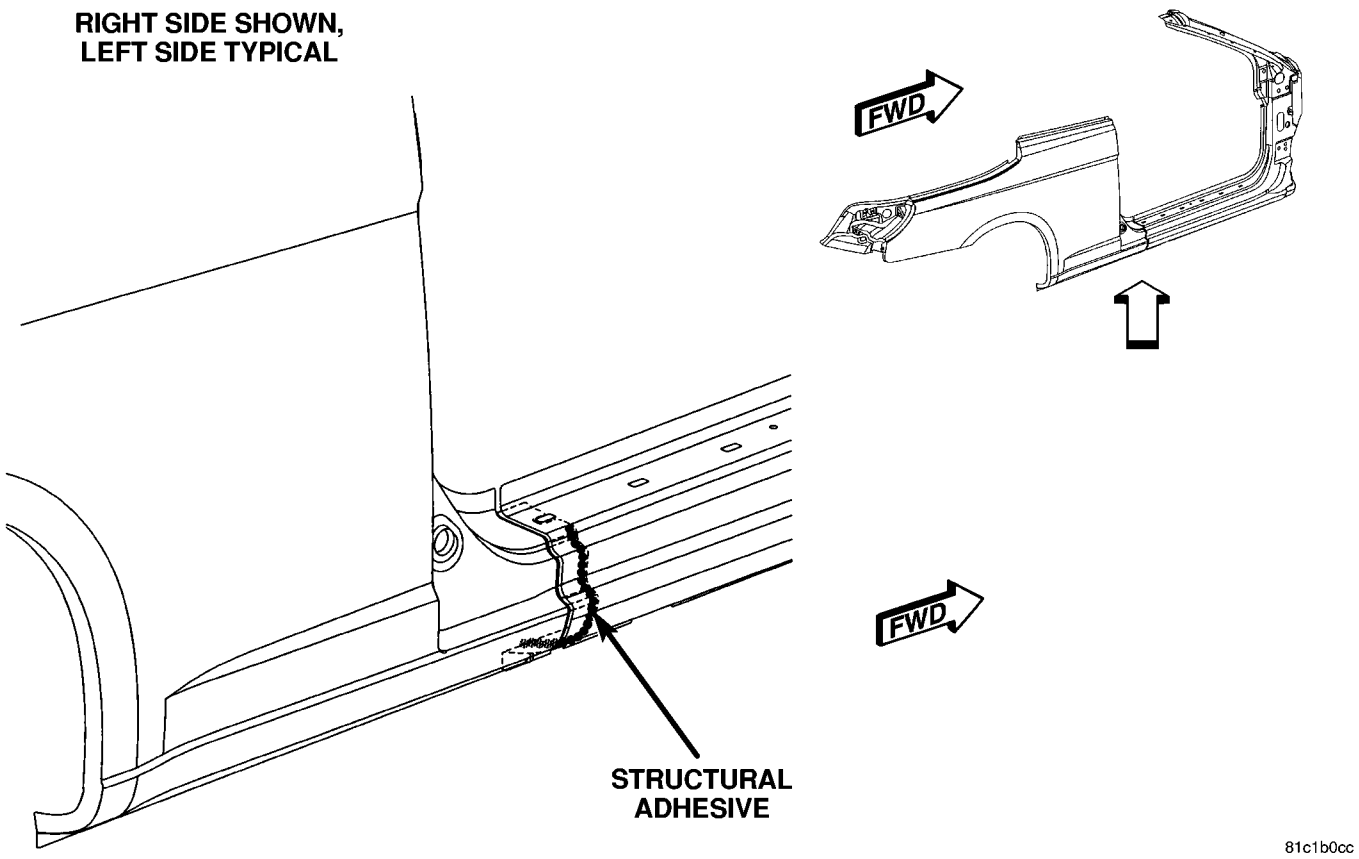

Figure 13. BODY SIDE APERTURE OUTER

Back to Index

STRUCTURAL ADHESIVE LOCATIONS

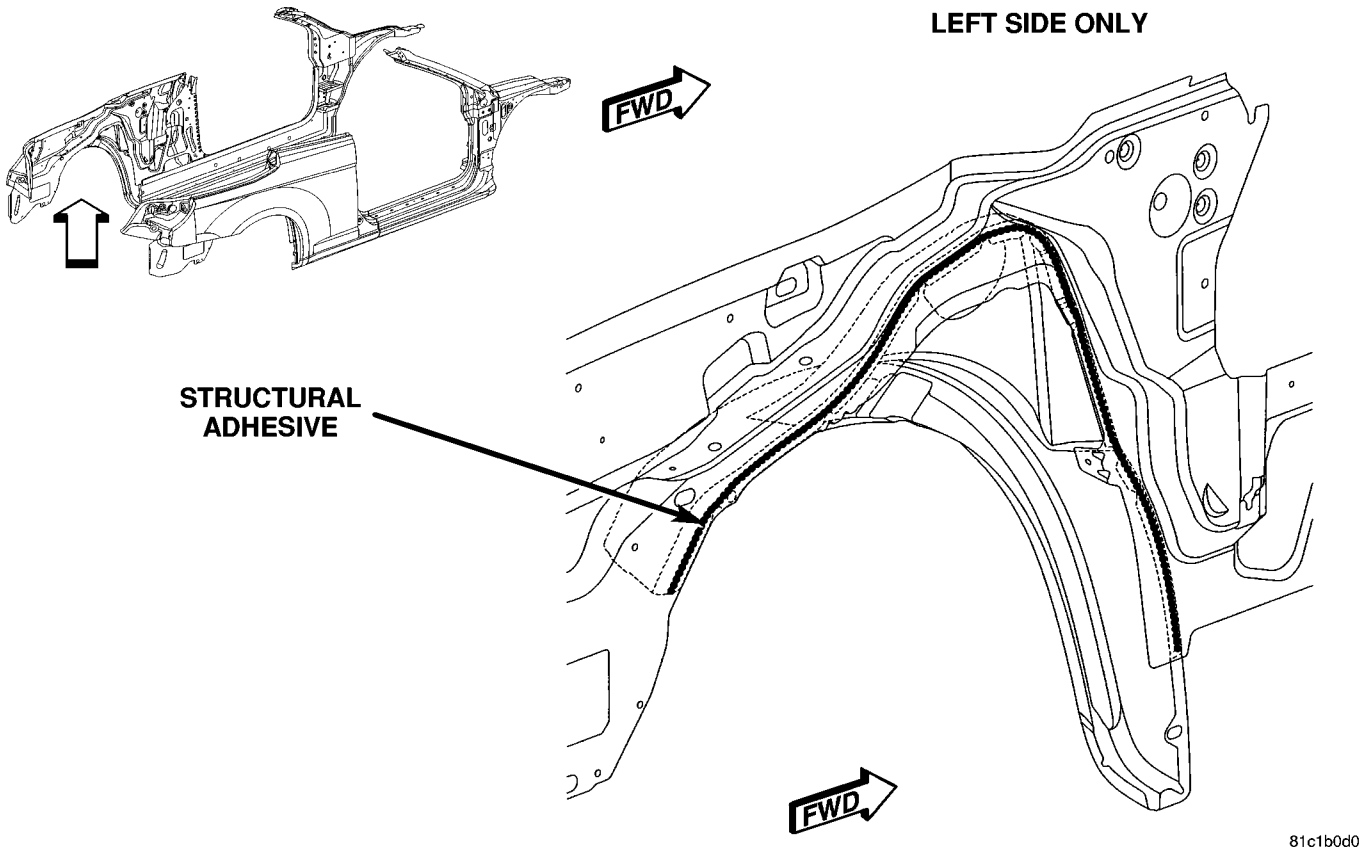

Figure 14. BODY SIDE APERTURE COMPLETE (1 OF 2)

Back to Index

STRUCTURAL ADHESIVE LOCATIONS

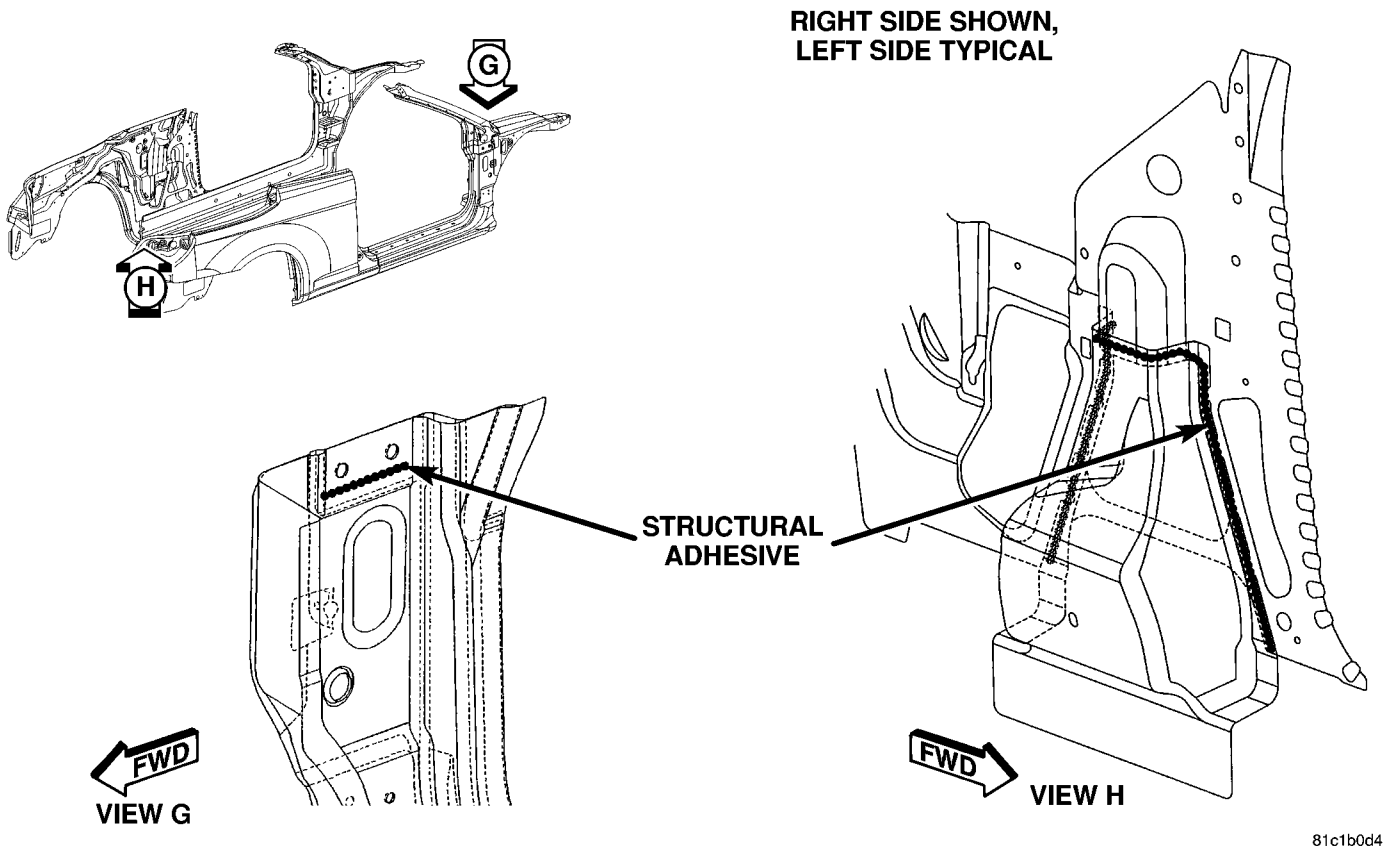

Figure 15. BODY SIDE APERTURE COMPLETE (2 OF 2)

Back to Index

STRUCTURAL ADHESIVE LOCATIONS

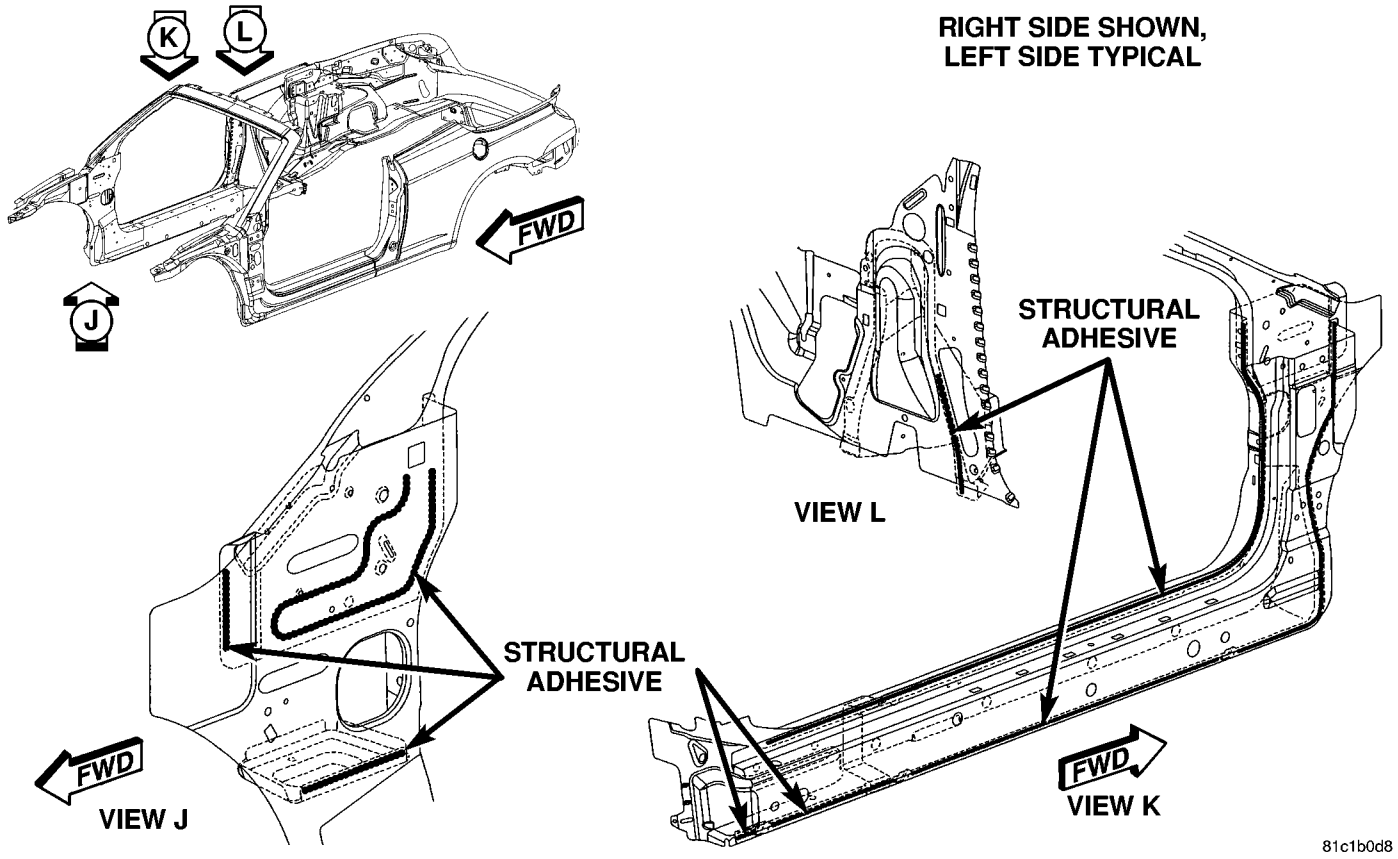

Figure 16. BODY IN WHITE COMPLETE

Back to Index

CHRYSLER SEBRING
DODGE AVENGER
BODY REPAIR MANUAL

CHRYSLER SEBRING
CONVERTIBLE
BODY REPAIR MANUAL

CHRYSLER SEBRING UNDERBODY SECTION

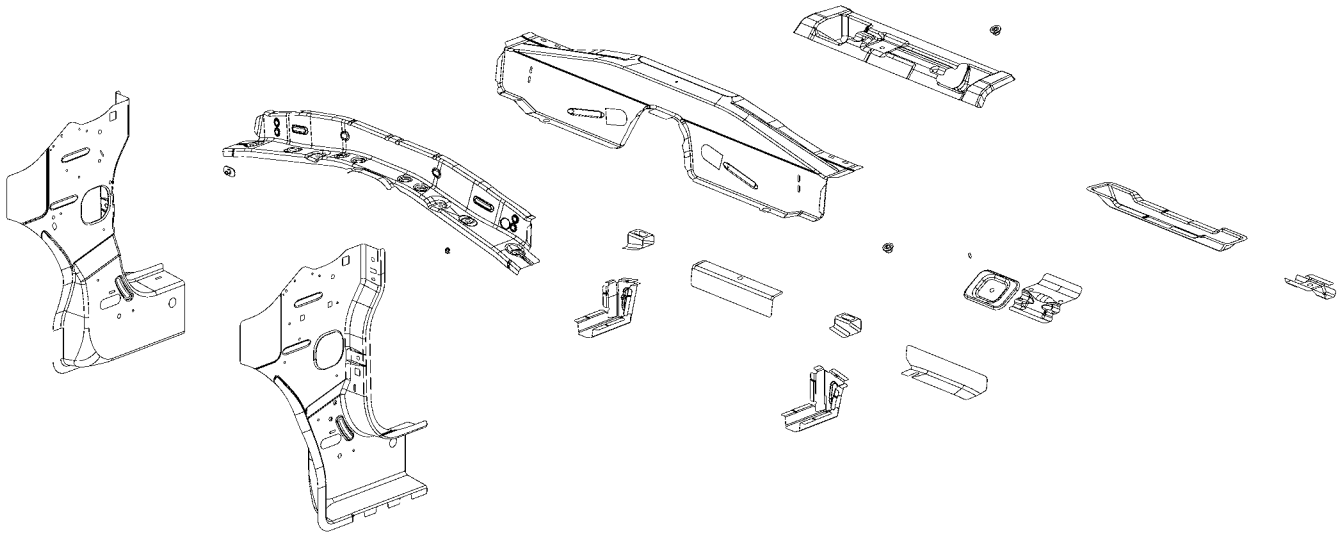

AA PANEL – COWL SIDE RT –
AA PANEL – COWL SIDE LT –
AB SILL – FRT FLOOR PAN RT –
AB SILL – FRT FLOOR PAN LT –
AC REINF – TUNNEL –
AD NUT/WELD.SQ – NIBS.NO.FIN.SQUARE – I/P TO BACKBONE
AE NUT/WELD.SQ – NIBS.NO.FIN.SQUARE – SHIFTER BSE PLATE TO BACKBONE REINF
AF STUD.WELD/INTERNAL – HEADER.PT.NIBS.NO.FIN – PARK BRAKE LEVER TO TUNNEL REINF
AG REINF – HAND BRAKE MTG –
AH BRACKET – CTR CONSOLE –
AJ REINF – RR SEAT BELT–
AK STUD.WELD/INTERNAL – NIBS.NO.FIN.PILOT.PT.PF-SAFETY – REINF TO FLR PAN
AK STUD.WELD/INTERNAL – NIBS.NO.FIN.PILOT.PT.PF-SAFETY – SEATBELT TO RR FLOORPAN
AK STUD.WELD/INTERNAL – NIBS.NO.FIN.PILOT.PT.PF-SAFETY – RR SEAT TO RR FLOORPAN
AL CROSSMEMBER – RR FLOOR RR –
AM BRACKET – RR FLOOR PAN SPARE WHEEL ANCHOR –
AN REINF – RR SEAT MOUNTING –
AR RAIL – TUNNEL FRT RT –
AS NUT/WELD.HEX – NIBS.NO.FIN – SIDEMEMBER TO CROSSBRACE
AT BRACKET ASSY – TRANS MOUNT LT –
AU RAIL – TUNNEL FRT LT –
AV BRACKET – FRT FLOOR TUNNEL –
AW HOOK – MUFFLER HANGER BRACKET –

Back to Index

PARTS IDENTIFICATION LEGEND, OVERVIEW 10

AA PANEL – COWL SIDE RT –
AA PANEL – COWL SIDE LT –
AB SILL – FRT FLOOR PAN RT –
AB SILL – FRT FLOOR PAN LT –
AC REINF – TUNNEL –
AD NUT/WELD.SQ – NIBS.NO.FIN.SQUARE – I/P TO BACKBONE
AE NUT/WELD.SQ – NIBS.NO.FIN.SQUARE – SHIFTER BSE PLATE TO BACKBONE REINF
AF STUD.WELD/INTERNAL – HEADER.PT.NIBS.NO.FIN – PARK BRAKE LEVER TO TUNNEL REINF
AG REINF – HAND BRAKE MTG –
AH BRACKET – CTR CONSOLE –
AJ REINF – RR SEAT BELT–
AK STUD.WELD/INTERNAL – NIBS.NO.FIN.PILOT.PT.PF-SAFETY – REINF TO FLR PAN
AK STUD.WELD/INTERNAL – NIBS.NO.FIN.PILOT.PT.PF-SAFETY – SEATBELT TO RR FLOORPAN
AK STUD.WELD/INTERNAL – NIBS.NO.FIN.PILOT.PT.PF-SAFETY – RR SEAT TO RR FLOORPAN
AL CROSSMEMBER – RR FLOOR RR –
AM BRACKET – RR FLOOR PAN SPARE WHEEL ANCHOR –
AN REINF – RR SEAT MOUNTING –
AR RAIL – TUNNEL FRT RT –
AS NUT/WELD.HEX – NIBS.NO.FIN – SIDEMEMBER TO CROSSBRACE
AT BRACKET ASSY – TRANS MOUNT LT –
AU RAIL – TUNNEL FRT LT –
AV BRACKET – FRT FLOOR TUNNEL –
AW HOOK – MUFFLER HANGER BRACKET –

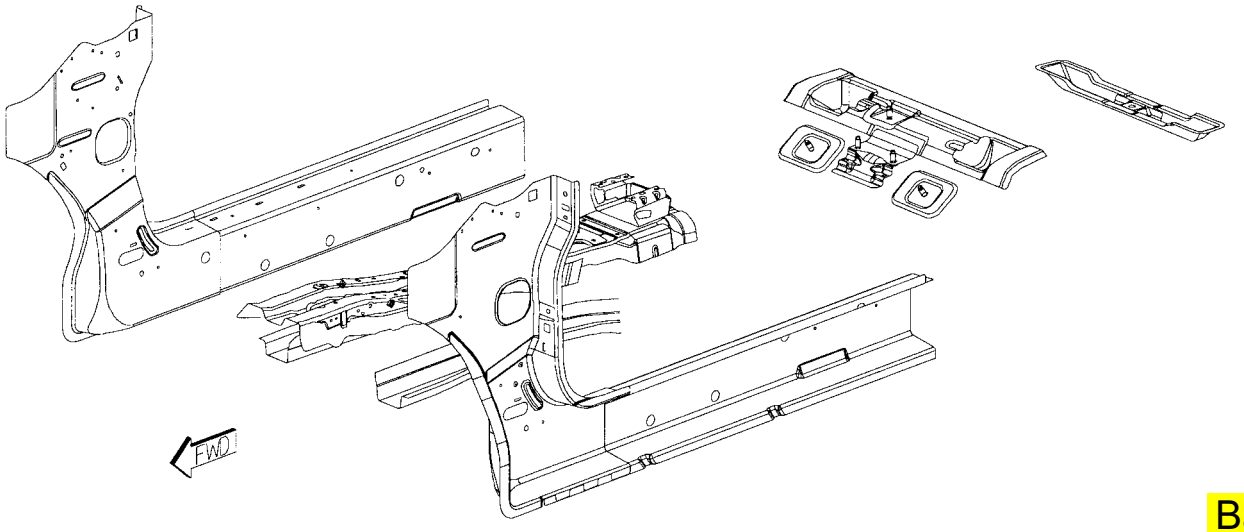

Back to Index

WELD LAYOUT LOCATION GUIDE

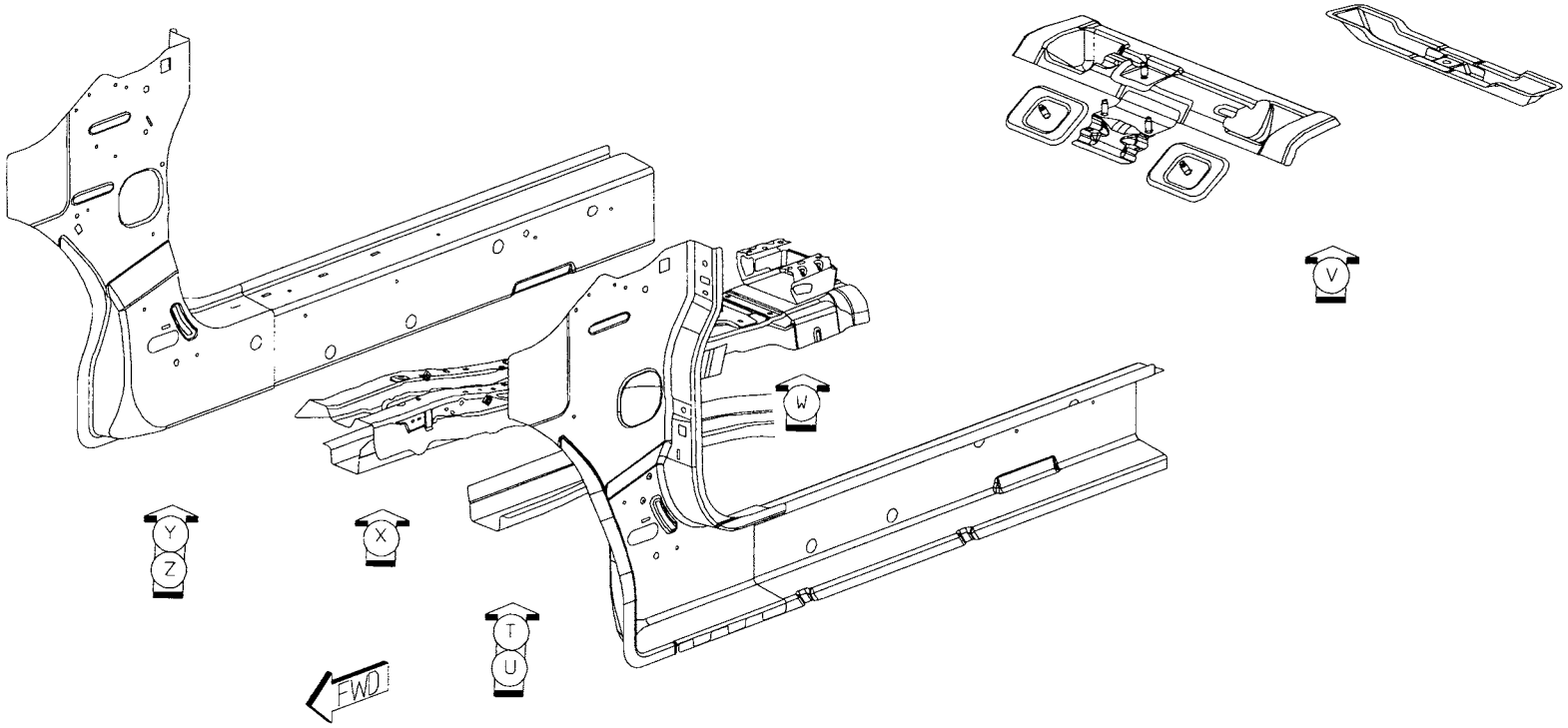

Back to Index

01 AA TO AB 37/SD S/WELDS (ORD)

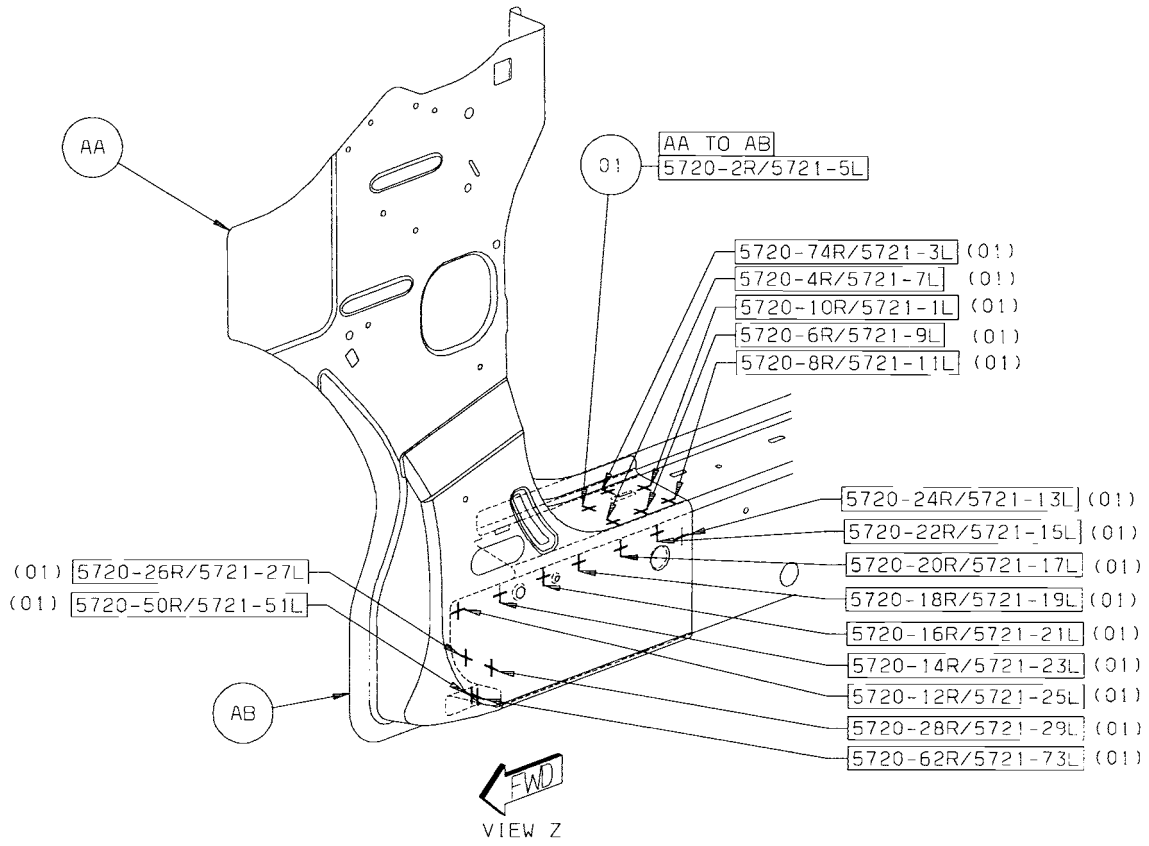

Back to Index

01 AA TO AB 37/SD S/WELDS (ORD)

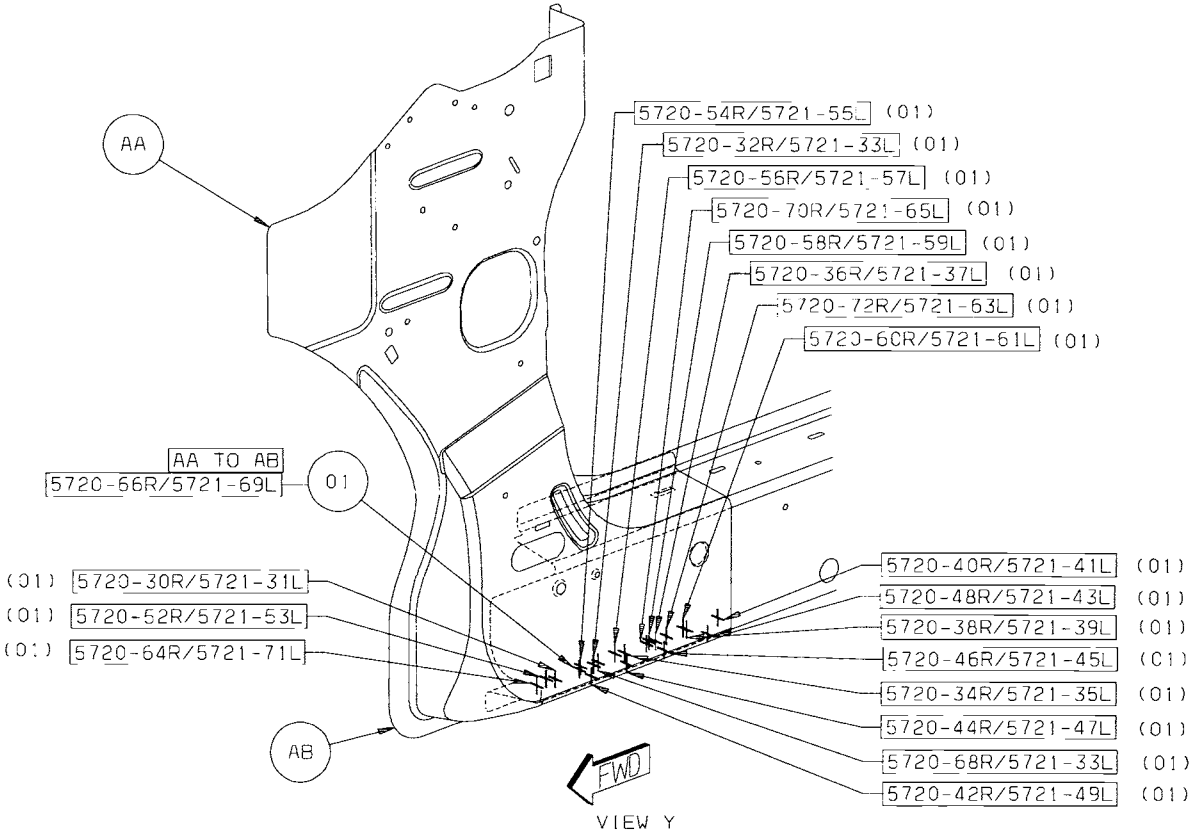

Back to Index

02 AC TO AF 2 PROJ WELDS (ORD)
03 AE TO AC 4 PROJ WELDS (ORD)
04 AF TO AC 12 SPOT WELDS (ORD)
05 AF TO AG 2 PROJ WELDS (ORD)

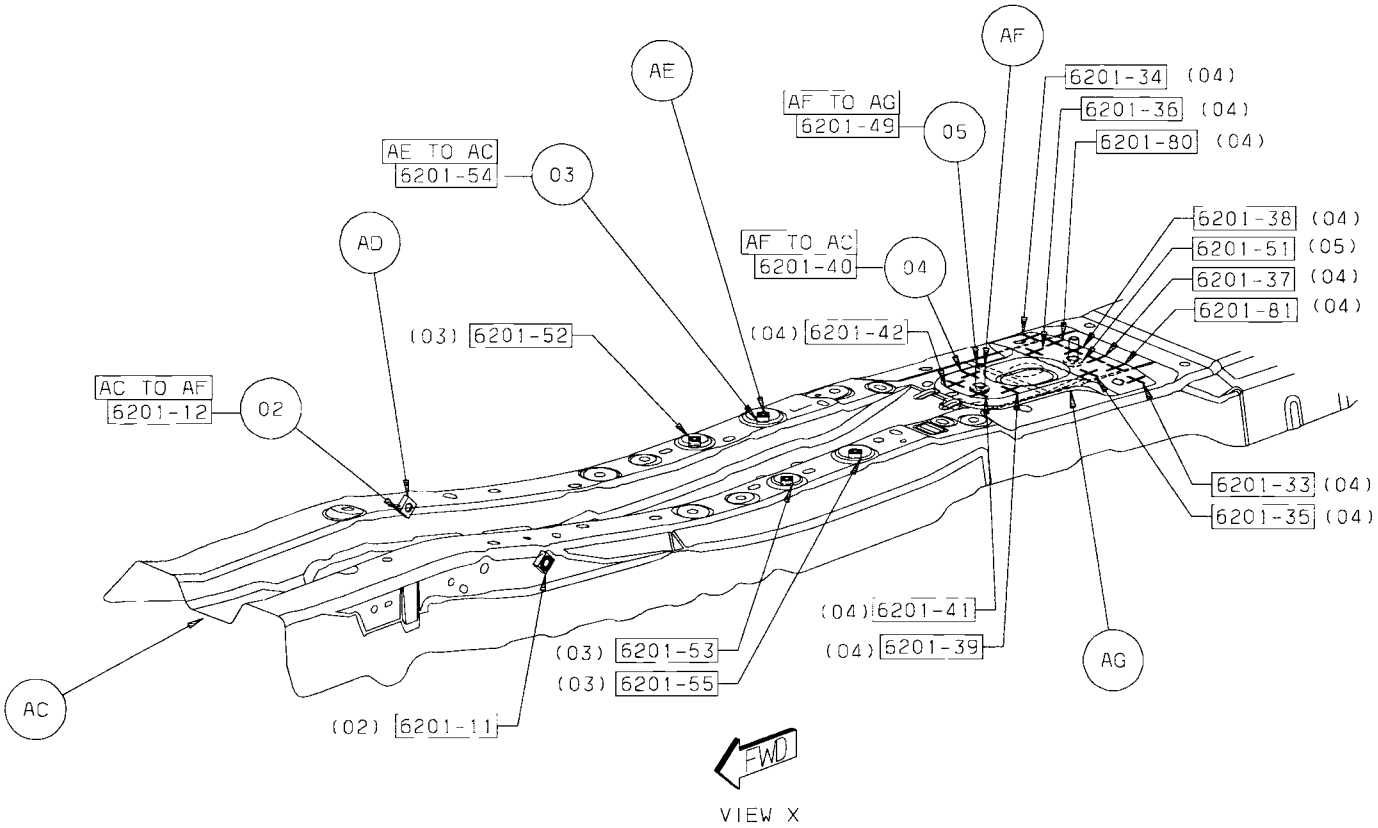

Back to Index

06 AH TO AC 12 SPOT WELDS (ORD)
07 AH TO AH 4 SPOT WELDS (ORD)

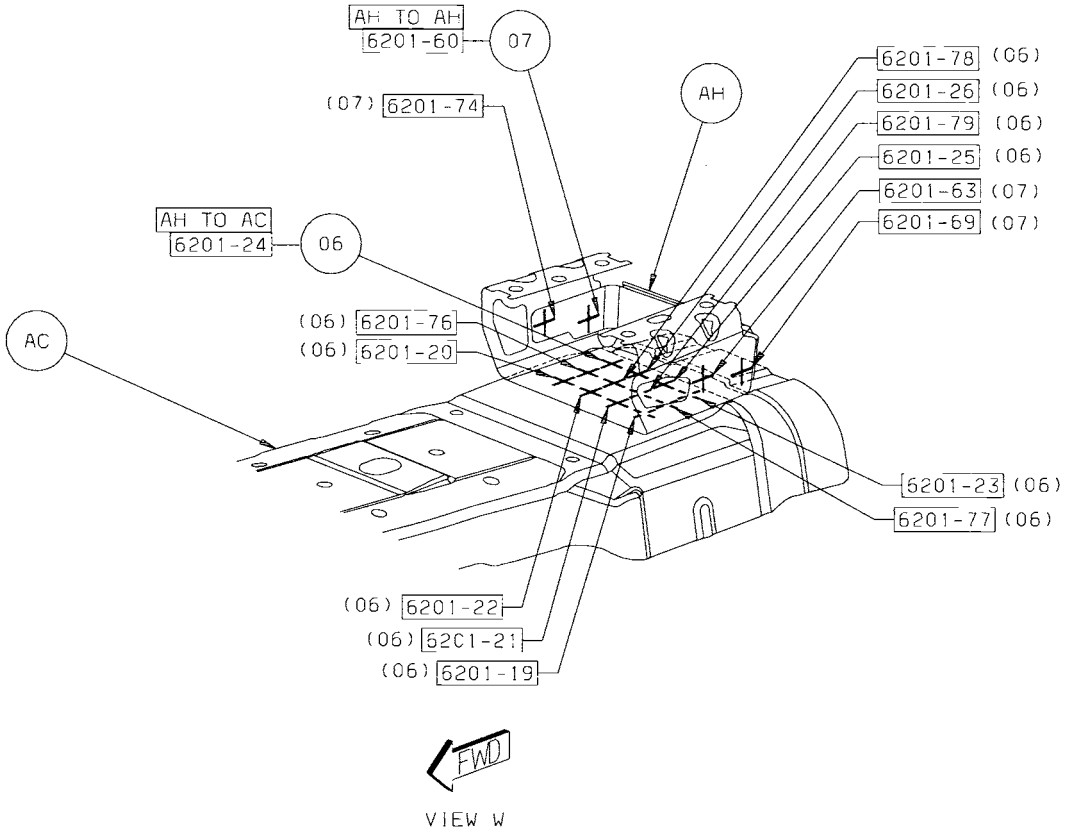

Back to Index

08 AJ TO AK 2 PROJ WELDS (SAF)
09 AK TO AP 2 PROJ WELD (ORD)
10 AK TO AN 1 PROJ WELD (ORD)
11 AL TO AM 8 SPOT WELDS (CRI)

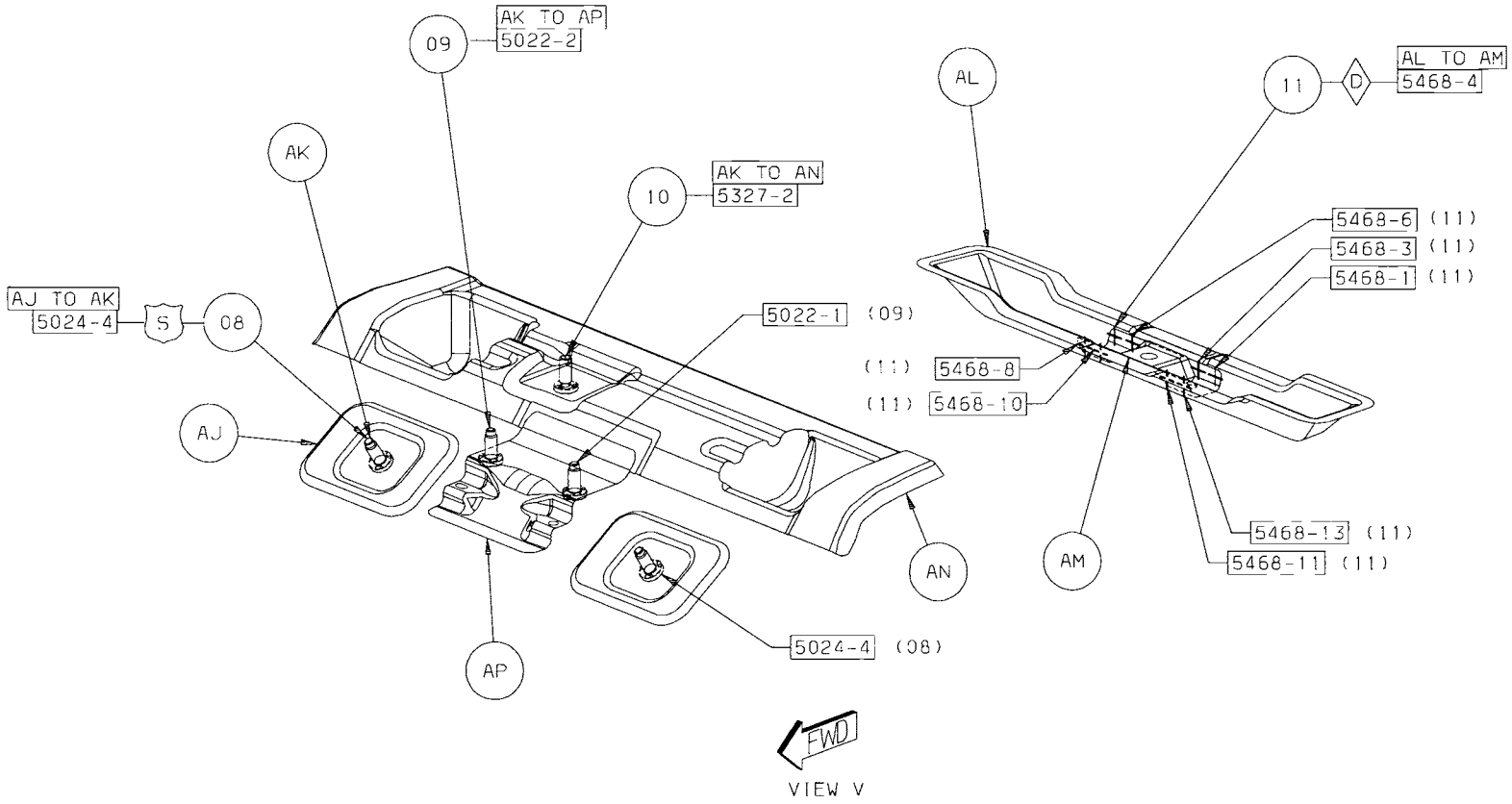

Back to Index

12 AR TO AT 8 SPOT WELDS (ORD)
13 AS TO AT 1 PROJ WELD (ORD)
14 AS TO AU 1 PROJ WELD (ORD)
15 AT TO AU 8 SPOT WELDS (ORD)
16 AR TO AP 2 FCAW WELDS (ORD)
17 AR TO AN 2 STRUC ADH (ORD)
18 AR TO AN 1 STRUC ADH (ORD)

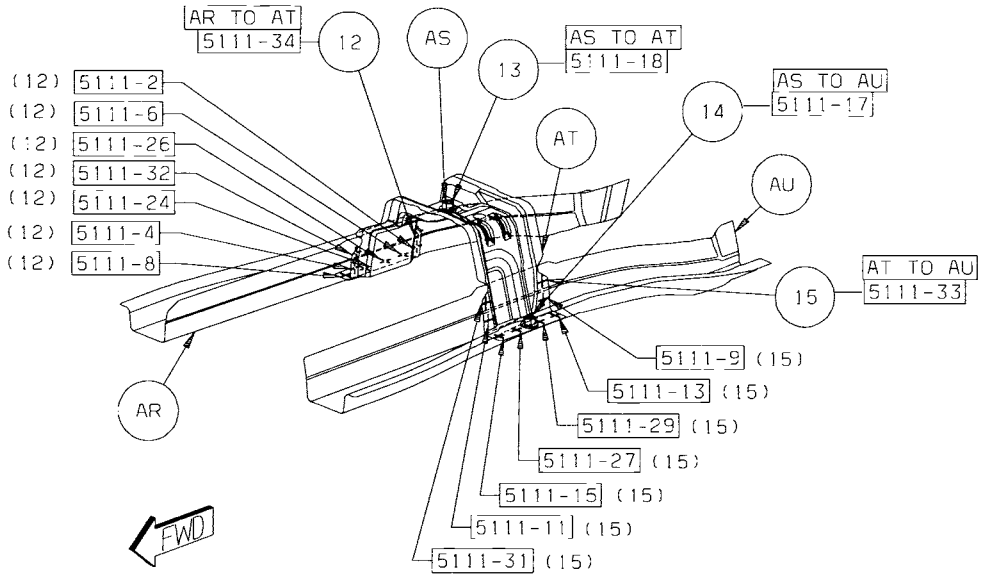

VIEW U

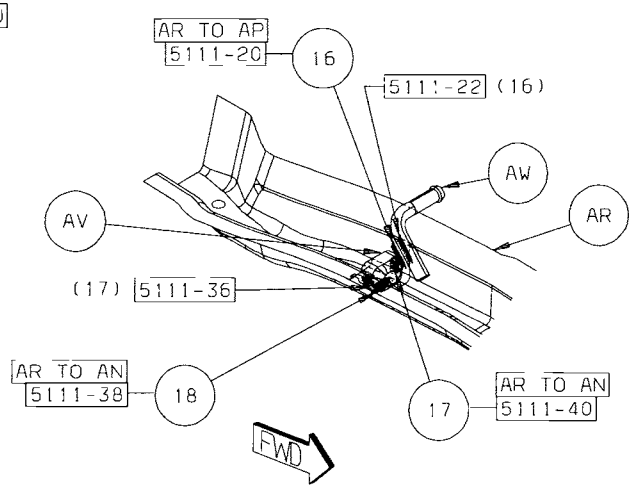

VIEW T

Back to Index

CHRYSLER SEBRING/DODGE AVENGER UNDEREBODY (COMMON) SECTION

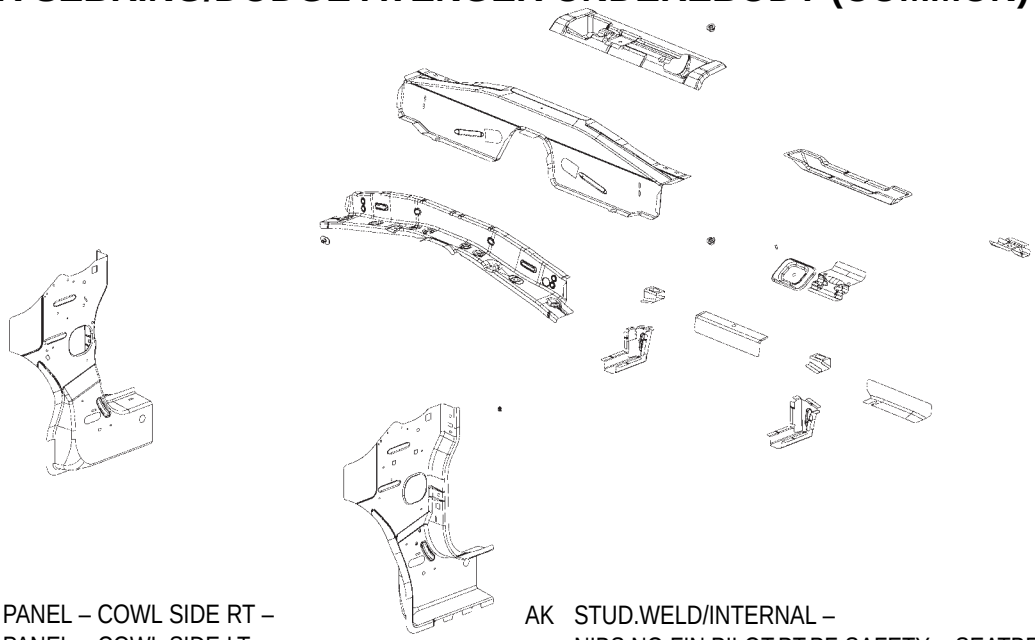

AA PANEL – COWL SIDE RT –
AA PANEL – COWL SIDE LT –
AB SILL – FRT FLOOR PAN RT –
AB SILL – FRT FLOOR PAN LT –
AC REINF – TUNNEL –
AD NUT/WELD.SQ – NIBS.NO.FIN.SQUARE – I/P TO BACKBONE
AE NUT/WELD.SQ – NIBS.NO.FIN.SQUARE – SHIFTER BSE PLATE TO BACKBONE REINF
AF STUD.WELD/INTERNAL – HEADER.PT.NIBS.NO.FIN – PARK BRAKE LEVER TO TUNNEL REINF
AG REINF – HAND BRAKE MTG –
AH BRACKET – CTR CONSOLE –
AJ REINF – RR SEAT BELT–
AK STUD.WELD/INTERNAL – NIBS.NO.FIN.PILOT.PT.PF-SAFETY – REINF TO FLR PAN
AK STUD.WELD/INTERNAL – NIBS.NO.FIN.PILOT.PT.PF-SAFETY – SEATBELT TO RR FLOORPAN
AK STUD.WELD/INTERNAL – NIBS.NO.FIN.PILOT.PT.PF-SAFETY – RR SEAT TO RR FLOORPAN
AL CROSSMEMBER – RR FLOOR RR –
AM BRACKET – RR FLOOR PAN SPARE WHEEL ANCHOR –
AN REINF – RR SEAT MOUNTING –
AR RAIL – TUNNEL FRT RT –
AS NUT/WELD.HEX – NIBS.NO.FIN – SIDEMEMBER TO CROSSBRACE
AT BRACKET ASSY – TRANS MOUNT LT –
AU RAIL – TUNNEL FRT LT –
AV BRACKET – FRT FLOOR TUNNEL –
AW HOOK – MUFFLER HANGER BRACKET –

Back to Index

PARTS IDENTIFICATION LEGEND, OVERVIEW 10

AA PANEL – COWL SIDE RT –
AA PANEL – COWL SIDE LT –
AB SILL – FRT FLOOR PAN RT –
AB SILL – FRT FLOOR PAN LT –
AC REINF – TUNNEL –
AD NUT/WELD.SQ – NIBS.NO.FIN.SQUARE – I/P TO BACKBONE
AE NUT/WELD.SQ – NIBS.NO.FIN.SQUARE – SHIFTER BSE PLATE TO BACKBONE REINF
AF STUD.WELD/INTERNAL – HEADER.PT.NIBS.NO.FIN – PARK BRAKE LEVER TO TUNNEL REINF
AG REINF – HAND BRAKE MTG –
AH BRACKET – CTR CONSOLE –
AJ REINF – RR SEAT BELT–
AK STUD.WELD/INTERNAL – NIBS.NO.FIN.PILOT.PT.PF-SAFETY – REINF TO FLR PAN
AK STUD.WELD/INTERNAL – NIBS.NO.FIN.PILOT.PT.PF-SAFETY – SEATBELT TO RR FLOORPAN
AK STUD.WELD/INTERNAL – NIBS.NO.FIN.PILOT.PT.PF-SAFETY – RR SEAT TO RR FLOORPAN
AL CROSSMEMBER – RR FLOOR RR –
AM BRACKET – RR FLOOR PAN SPARE WHEEL ANCHOR –
AN REINF – RR SEAT MOUNTING –
AR RAIL – TUNNEL FRT RT –
AS NUT/WELD.HEX – NIBS.NO.FIN – SIDEMEMBER TO CROSSBRACE
AT BRACKET ASSY – TRANS MOUNT LT –
AU RAIL – TUNNEL FRT LT –
AV BRACKET – FRT FLOOR TUNNEL –
AW HOOK – MUFFLER HANGER BRACKET –

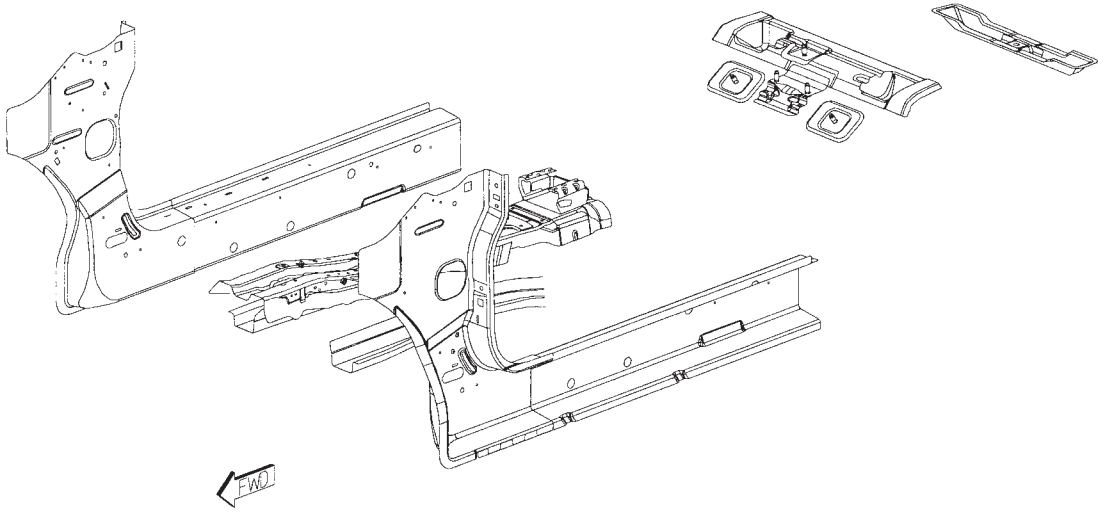

Back to Index

WELD LAYOUT LOCATION GUIDE

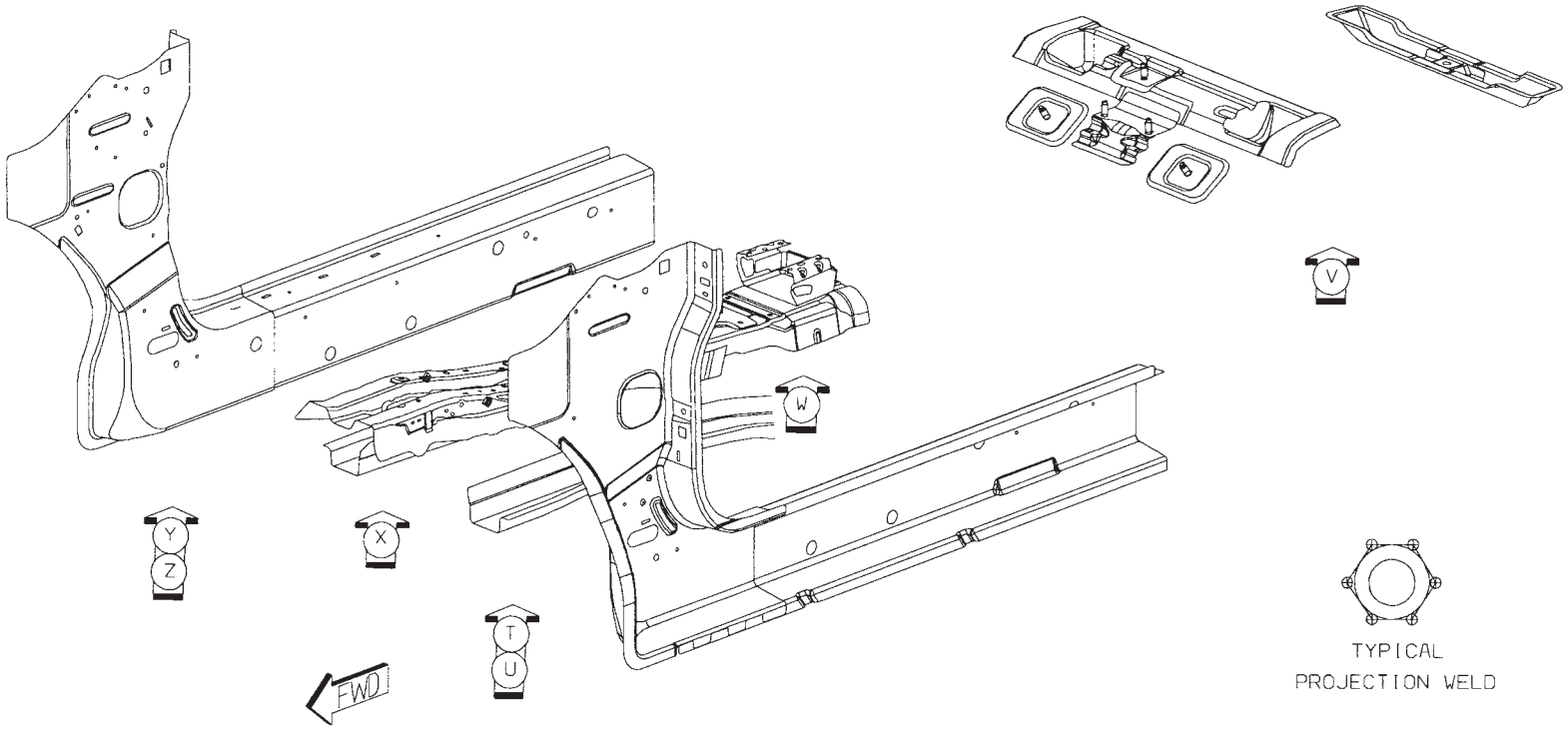

Back to Index

01 AA TO AB 37/SD S/WELDS (ORD)

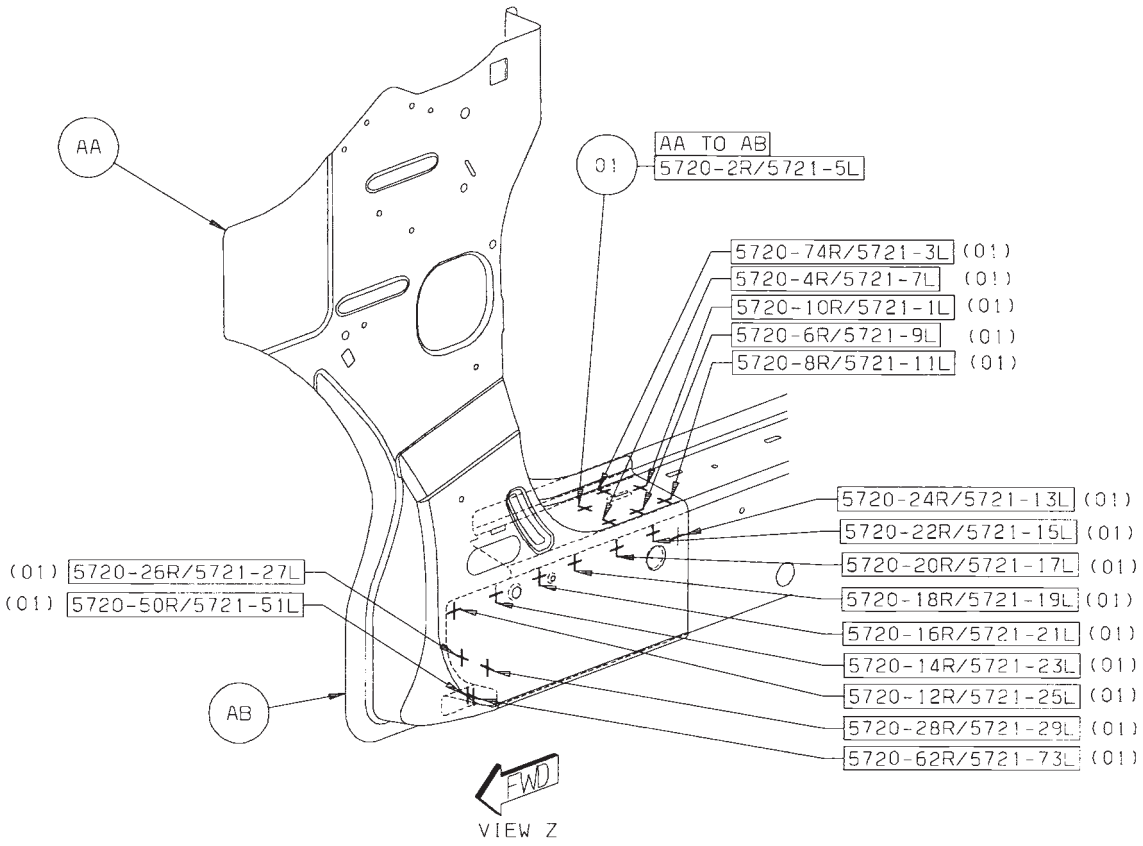

Back to Index

01 AA TO AB 37/SD S/WELDS (ORD)

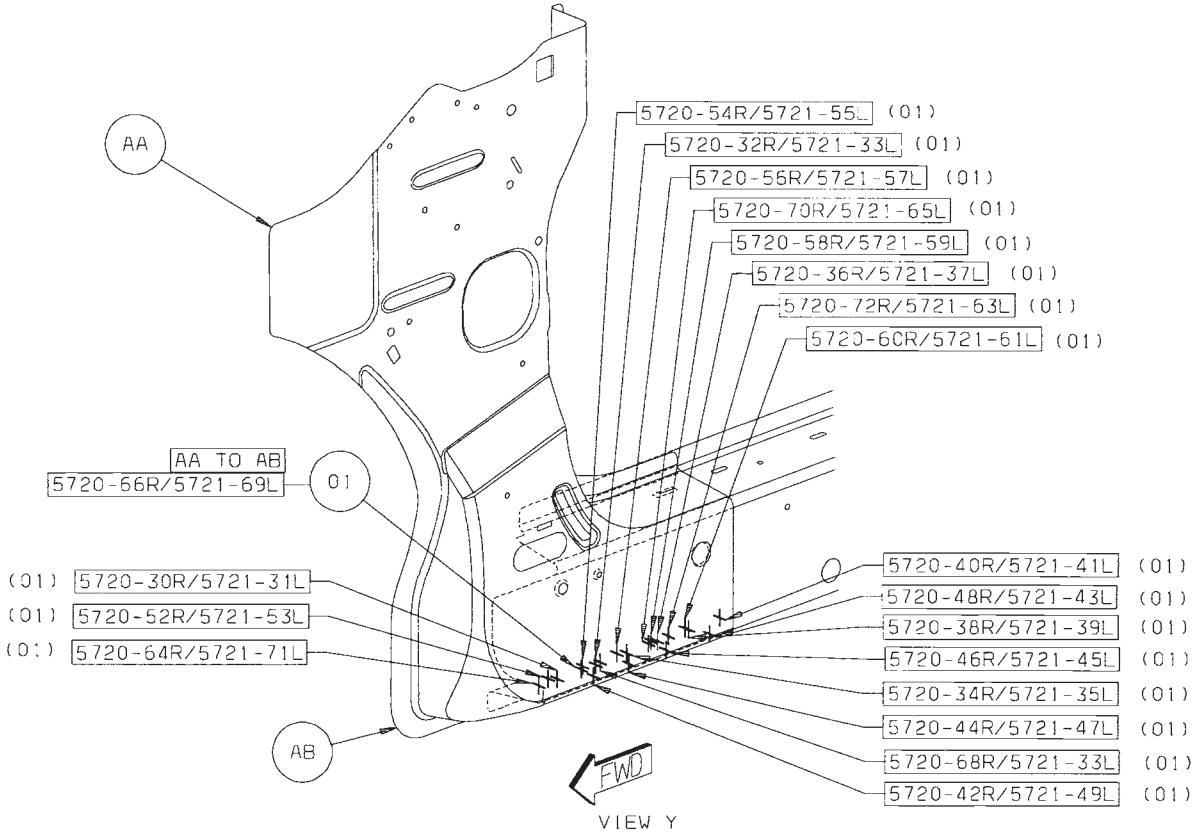

Back to Index

02 AC TO AF 2 PROJ WELDS (ORD)
03 AE TO AC 4 PROJ WELDS (ORD)
04 AF TO AC 12 SPOT WELDS (ORD)
05 AF TO AG 2 PROJ WELDS (ORD)

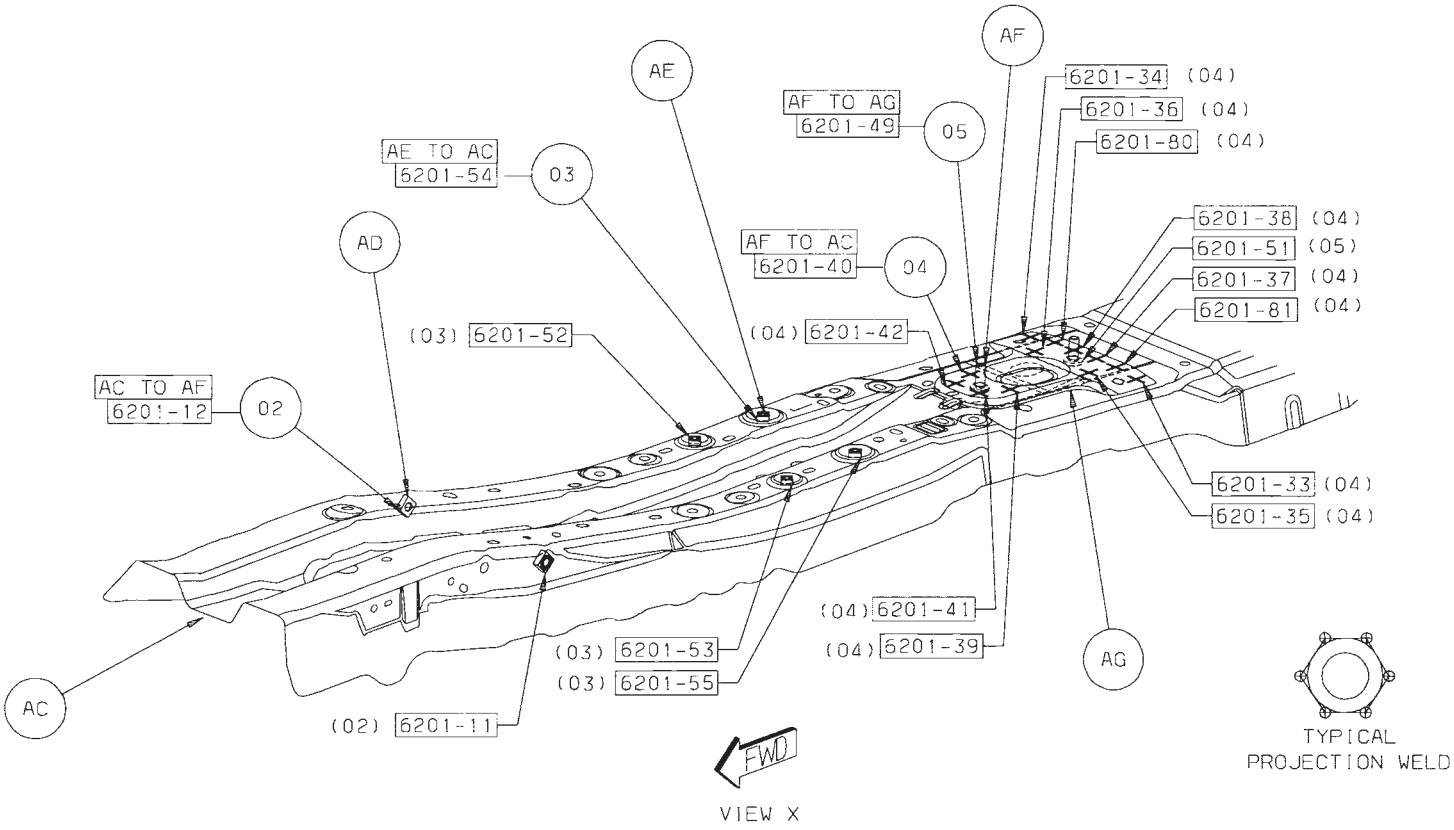

Back to Index

06 AH TO AC 12 SPOT WELDS (ORD)
07 AH TO AH 4 SPOT WELDS (ORD)

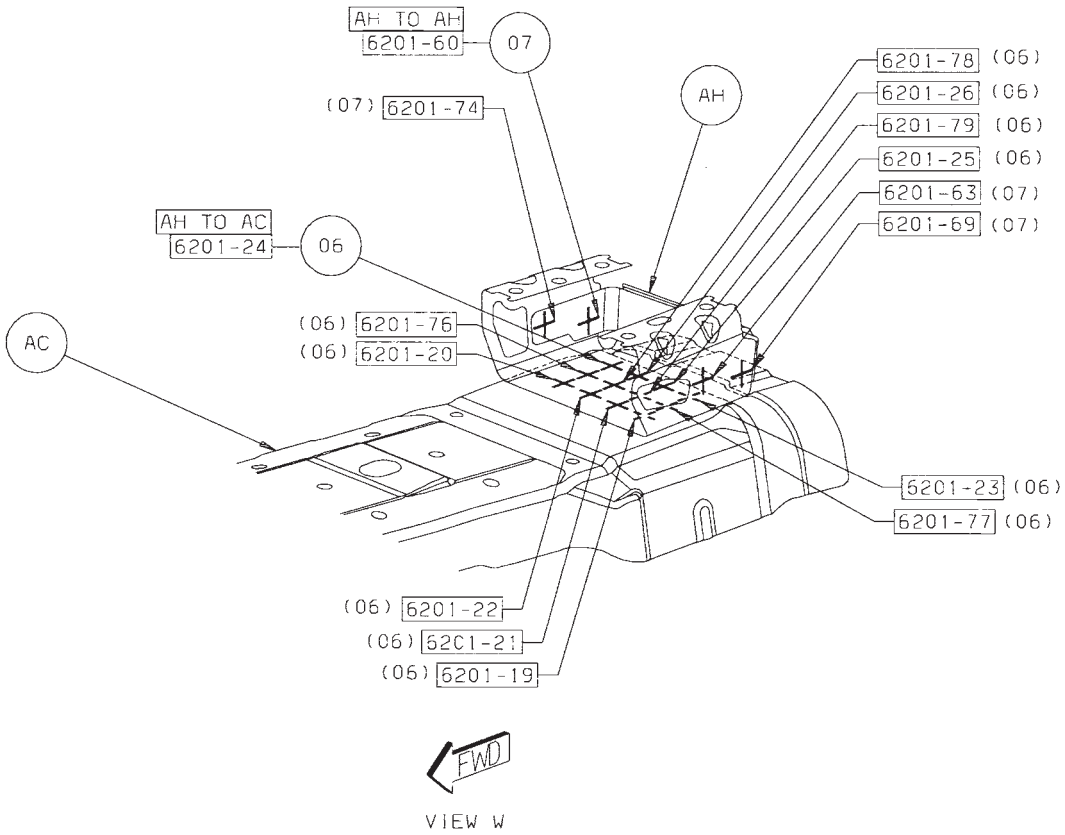

Back to Index

08 AJ TO AK 2 PROJ WELDS (SAF)
09 AK TO AP 2 PROJ WELD (ORD)
10 AK TO AN 1 PROJ WELD (ORD)
11 AL TO AM 8 SPOT WELDS (CRI)

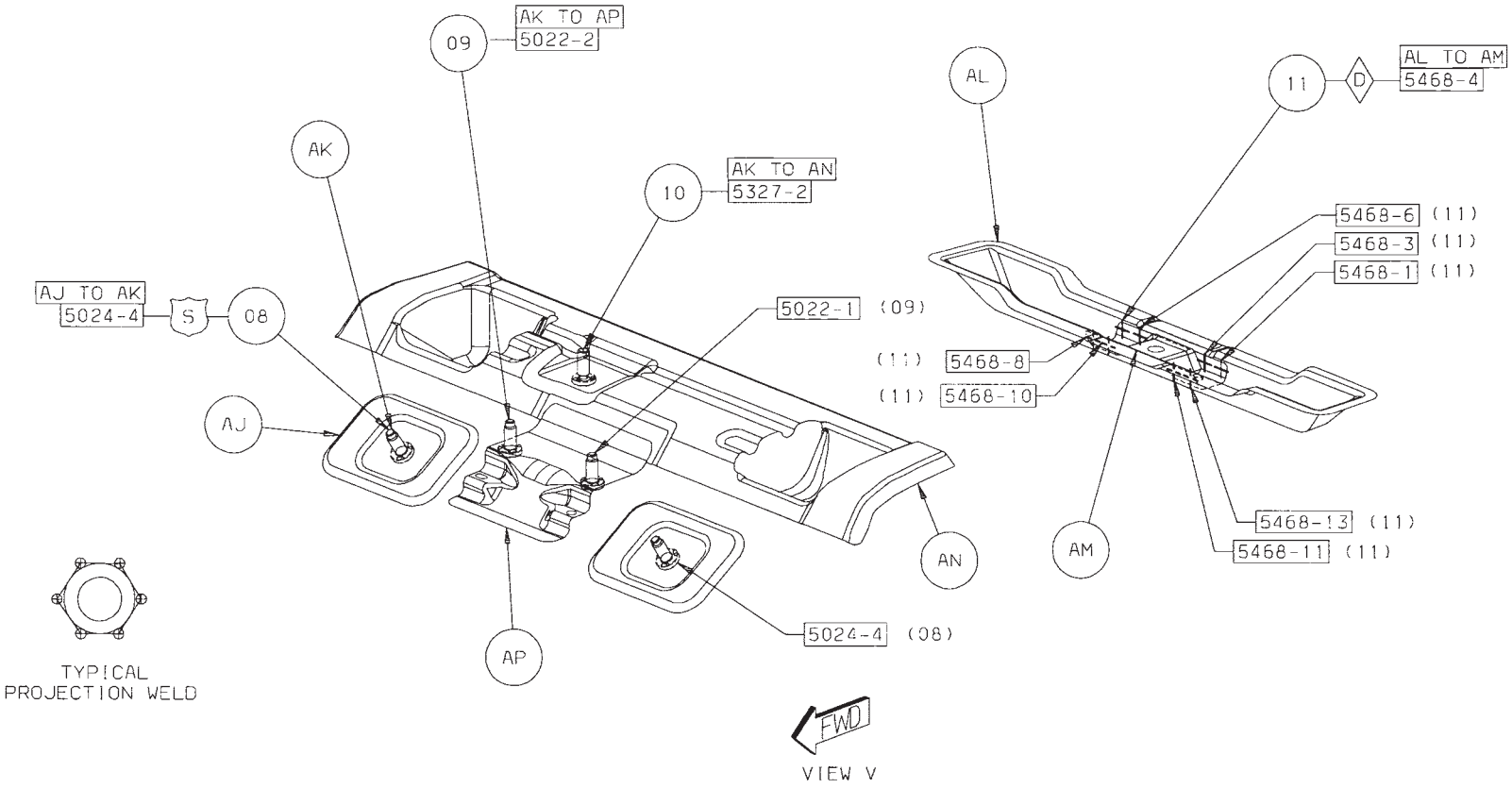

Back to Index

12 AR TO AT 8 SPOT WELDS (ORD)
13 AS TO AT 1 PROJ WELD (ORD)
14 AS TO AU 1 PROJ WELD (ORD)
15 AT TO AU 8 SPOT WELDS (ORD)
16 AR TO AP 2 FCAW WELDS (ORD)
17 AR TO AN 2 STRUC ADH (ORD)
18 AR TO AN 1 STRUC ADH (ORD)

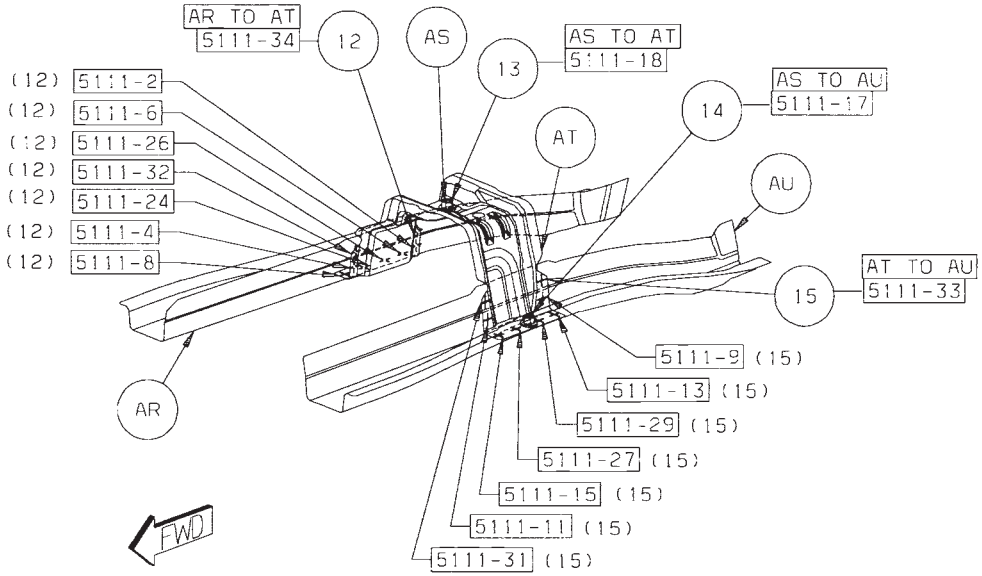

VIEW U

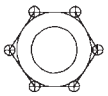

TYPICAL
PROJECTION WELD

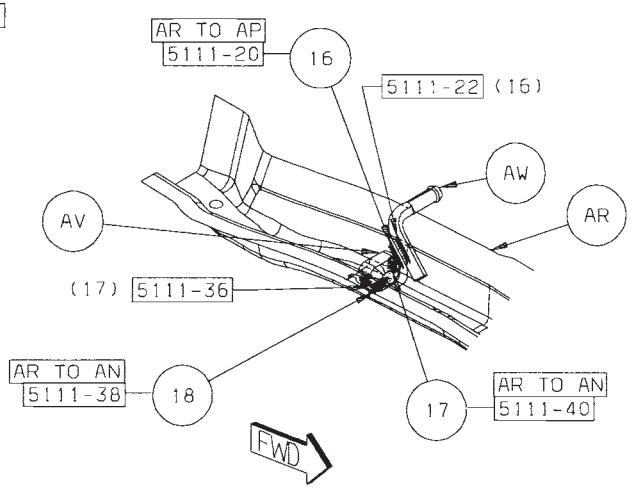

VIEW T

Back to Index

CHRYSLER SEBRING UNDERBODY ASSEMBLY SECTION

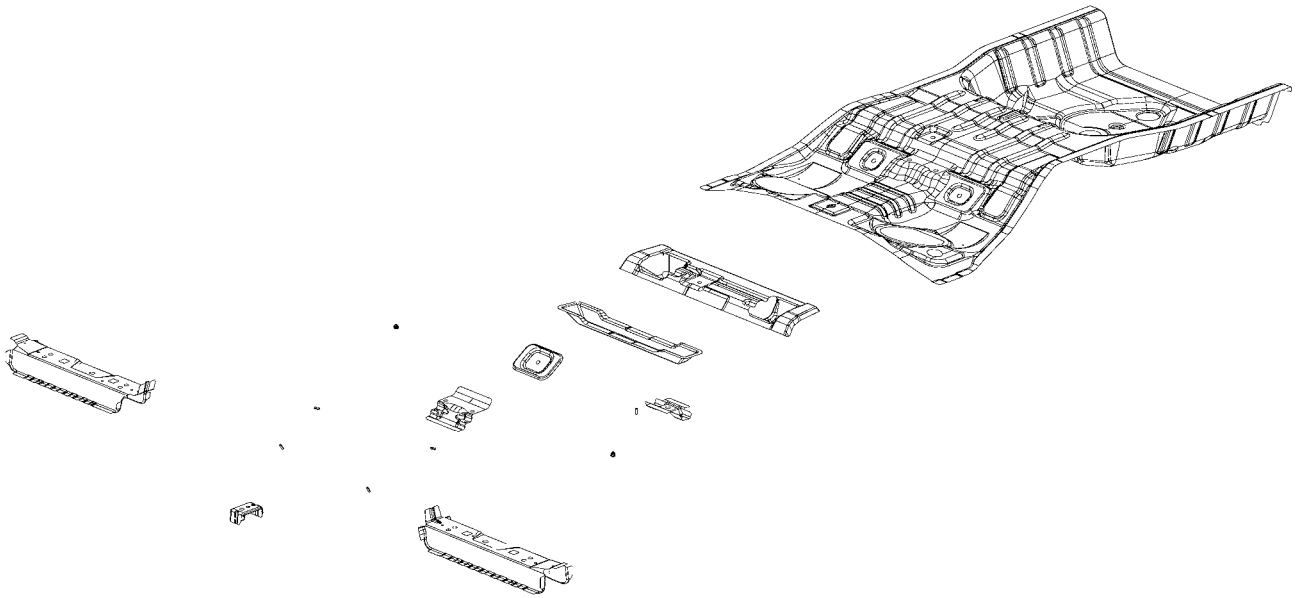

AA CROSSMEMBER – FRT FLOOR PAN FRT RT –
AB REINF – FRT FLOOR –
AB REINF – FRT FLOOR –
AC CROSSMEMBER – FRT FLOOR PAN FRT LT –
AD PAN – RR FLOOR PAN –
AE REINF – RR SEAT BELT –
AF BRACKET – RR SEAT – NONE
AG STUD.WELD/EXTERNAL – HEADER.PT.CUTTER.SPECIAL – FUEL LINE TO CROSSMEMBER
AG STUD.WELD/EXTERNAL – HEADER.PT.PNT.CUTTER.SPECIAL – HYDRAULIC PUMP TO RR FLOOR PAN
AH REINF – RR SEAT MOUNTING –
AJ BRACE – FRT SHOCK TOWER –
AK STUD.WELD/EXTERNAL – HEADER.PT.NO.FIN.SPECIAL – MUFFLER TO CROSSMEMBER
AL BRACKET – RR FLOOR PAN SPARE WHEEL ANCHOR –
AM CROSSMEMBER – RR FLOOR RR –

Back to Index

PARTS IDENTIFICATION LEGEND, OVERVIEW 16

AA CROSSMEMBER – FRT FLOOR PAN FRT RT –
AB REINF – FRT FLOOR –
AB REINF – FRT FLOOR –
AC CROSSMEMBER – FRT FLOOR PAN FRT LT –
AD PAN – RR FLOOR PAN –
AE REINF – RR SEAT BELT –
AF BRACKET – RR SEAT – NONE
AG STUD.WELD/EXTERNAL – HEADER.PT.CUTTER.SPECIAL – FUEL LINE TO CROSSMEMBER
AG STUD.WELD/EXTERNAL – HEADER.PT.PNT.CUTTER.SPECIAL – HYDRAULIC PUMP TO RR FLOOR PAN
AH REINF – RR SEAT MOUNTING –
AJ BRACE – FRT SHOCK TOWER –
AK STUD.WELD/EXTERNAL – HEADER.PT.NO.FIN.SPECIAL – MUFFLER TO CROSSMEMBER
AL BRACKET – RR FLOOR PAN SPARE WHEEL ANCHOR –
AM CROSSMEMBER – RR FLOOR RR –

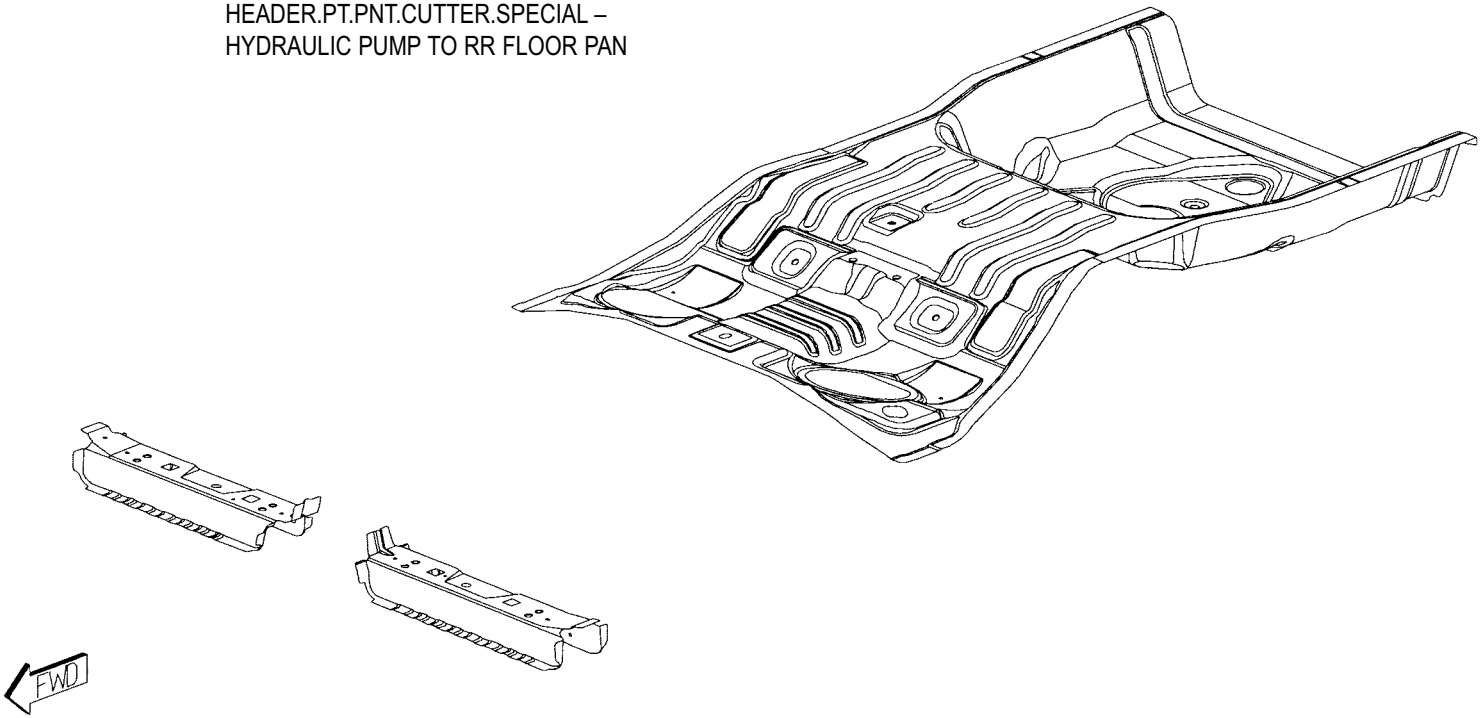

Back to Index

WELD LAYOUT LOCATION GUIDE

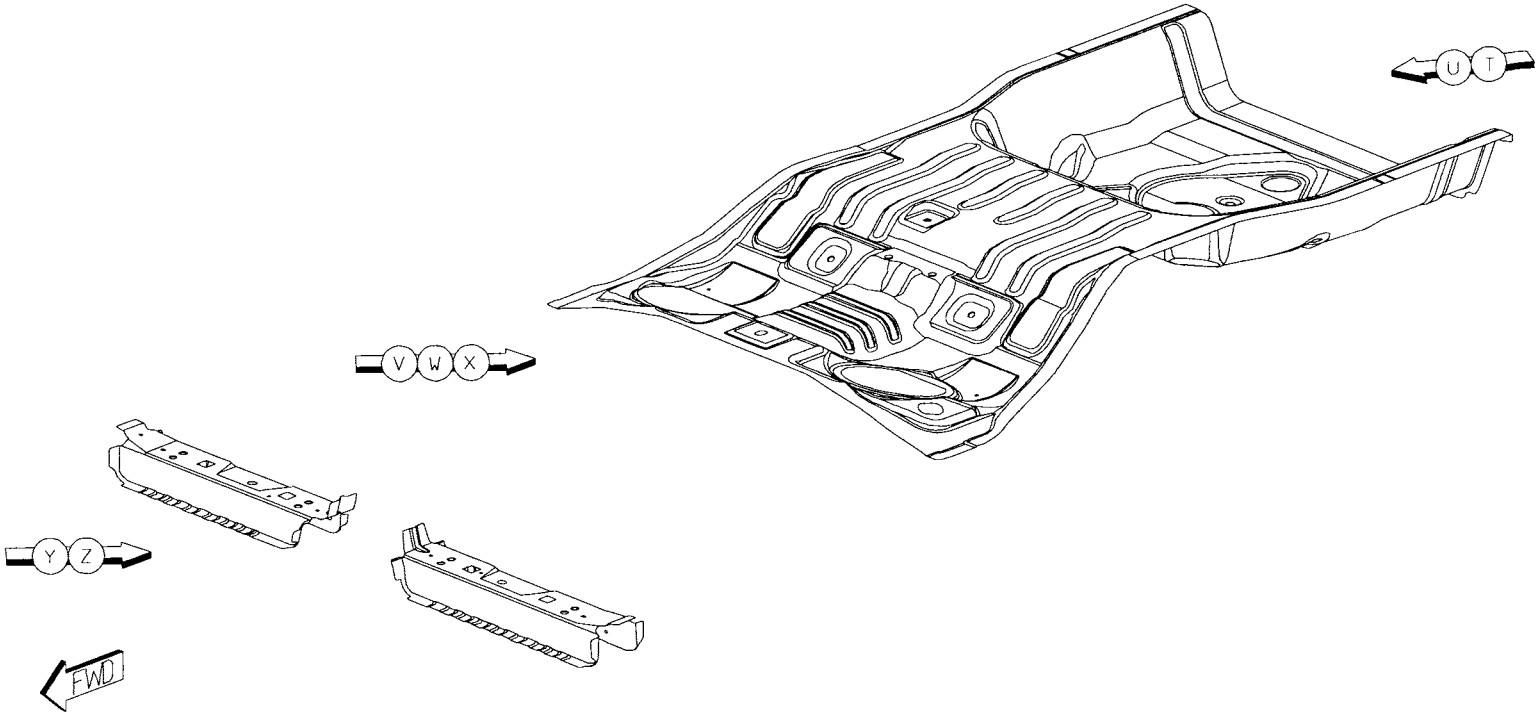

Back to Index

01 AB TO AA 12 S/WELDS (ORD)

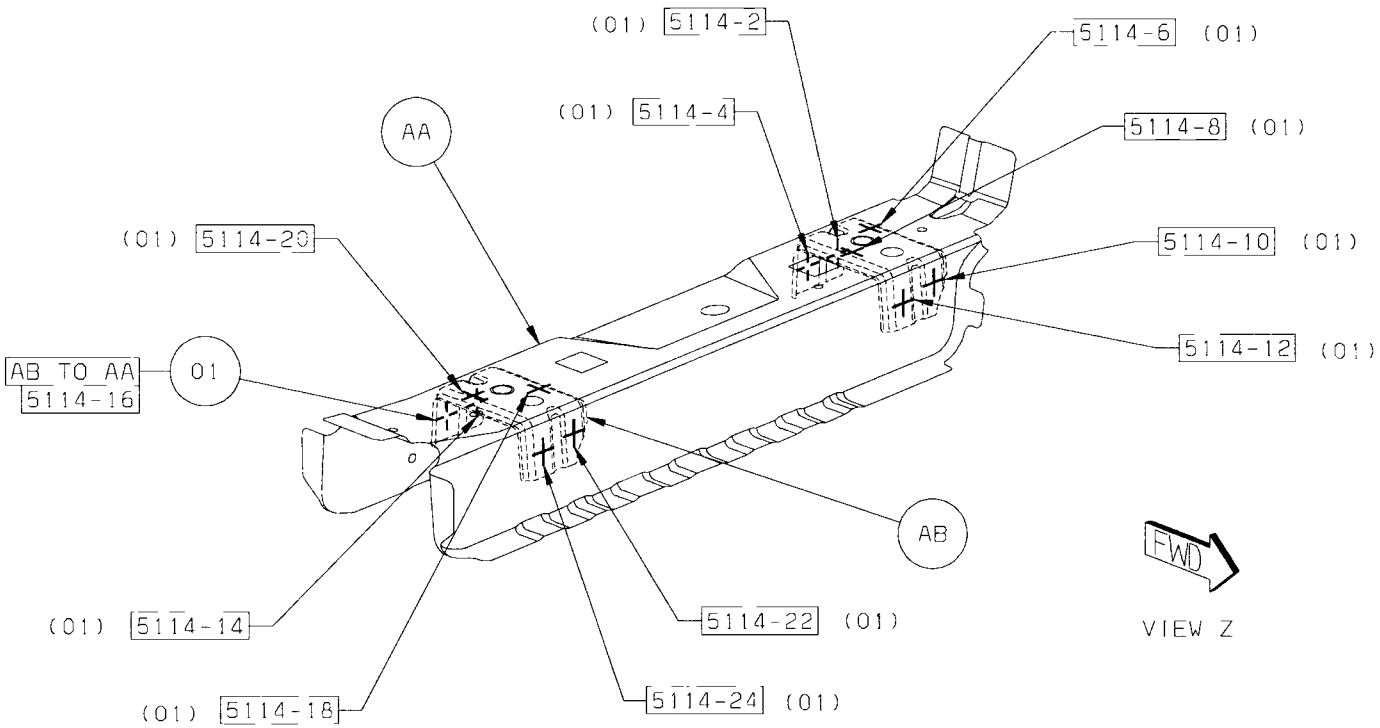

Back to Index

02 AB TO AC 12 S/WELDS (ORD)

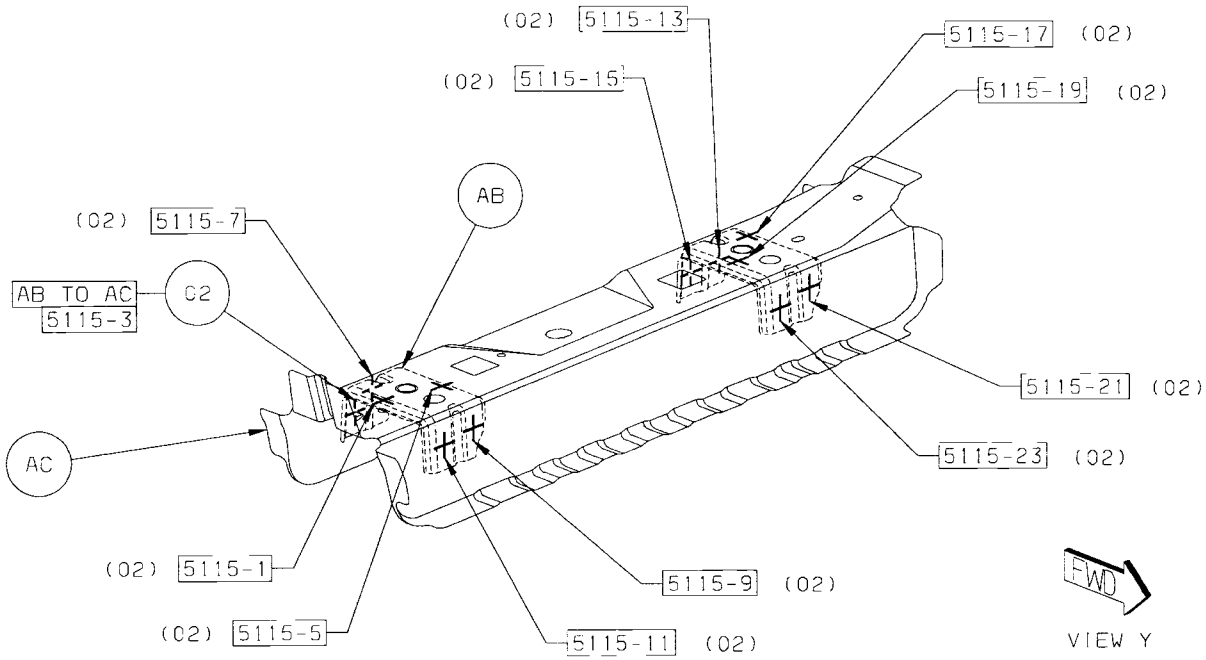

Back to Index

03 AE TO AD 12 S/WELDS (ORD)
04 AF TO AD 8 S/WELDS (ORD)

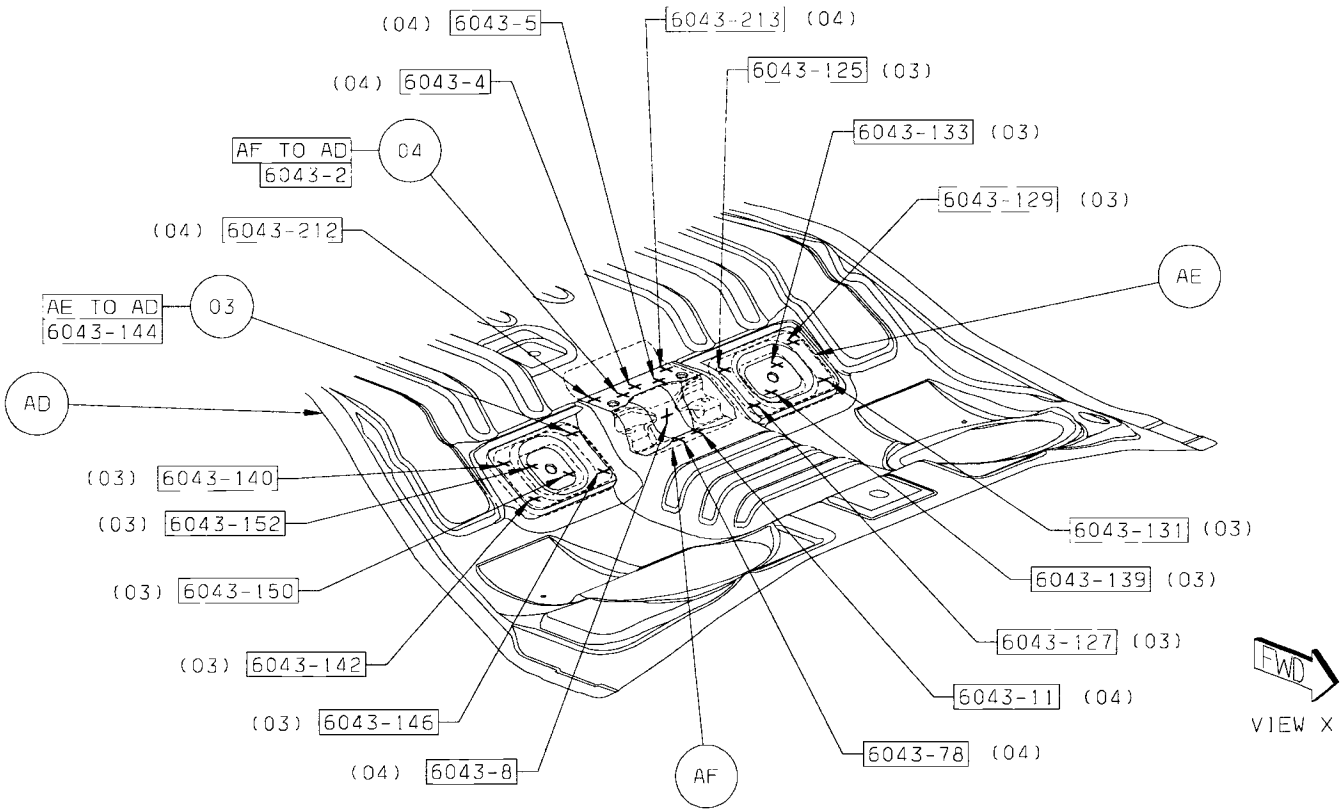

Back to Index

05 AM TO AD 12 S/WELDS (ORD)
06 AG TO AH 2 PROJ WELDS
07 AH TO AF TO AD 3 S/WELDS (ORD)

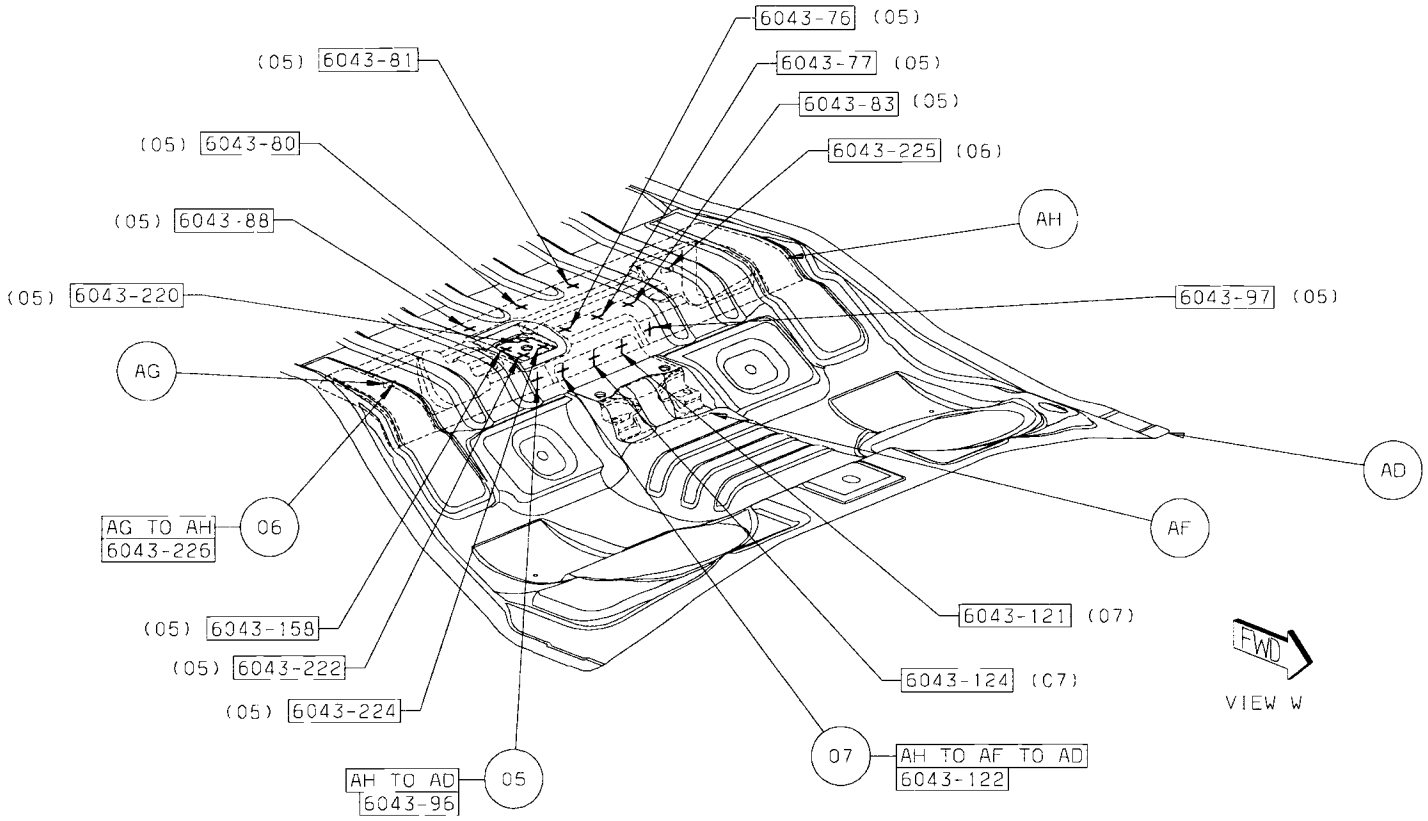

Back to Index

08 AH TO AD 22 S/WELDS (SAF)

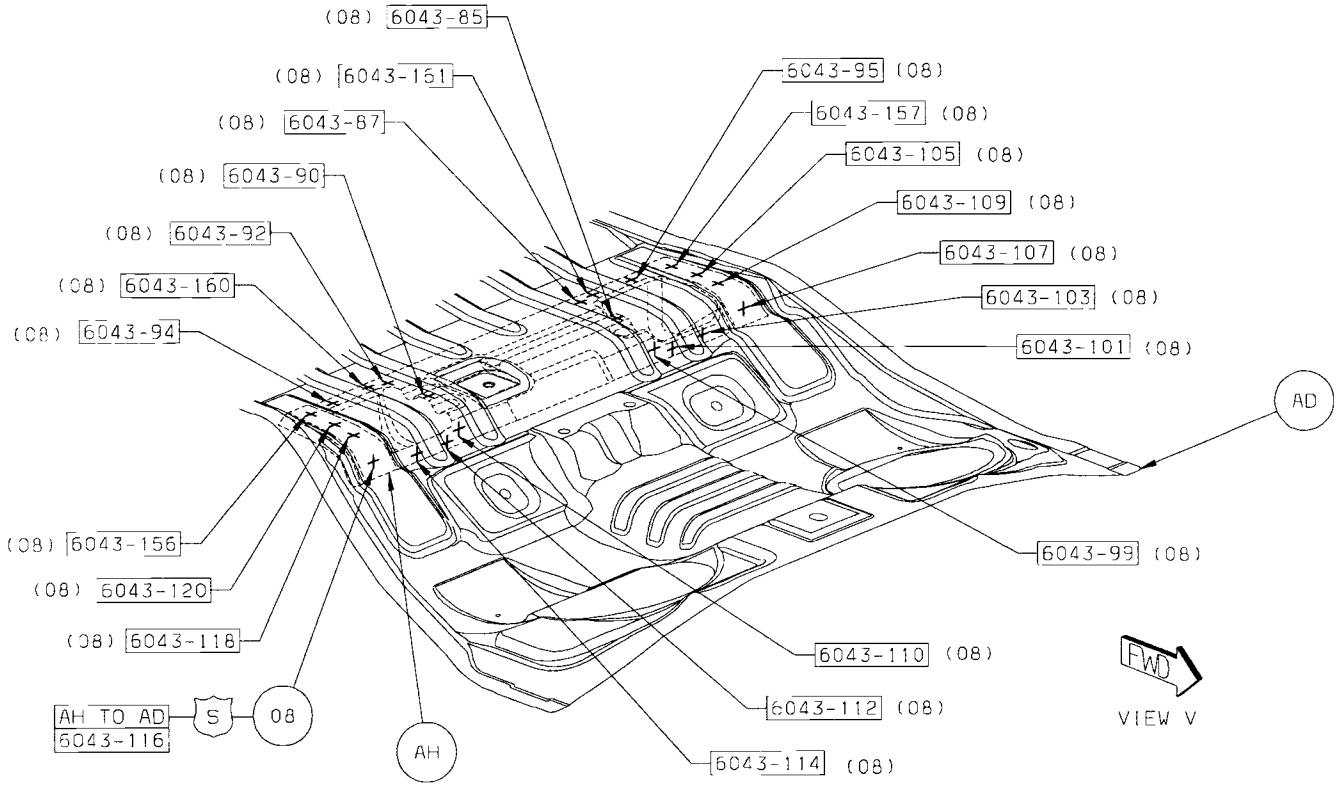

Back to Index

09 AJ TO AD 24 S/WELDS (ORD)
10 AG TO AD 1 PROJ WELD

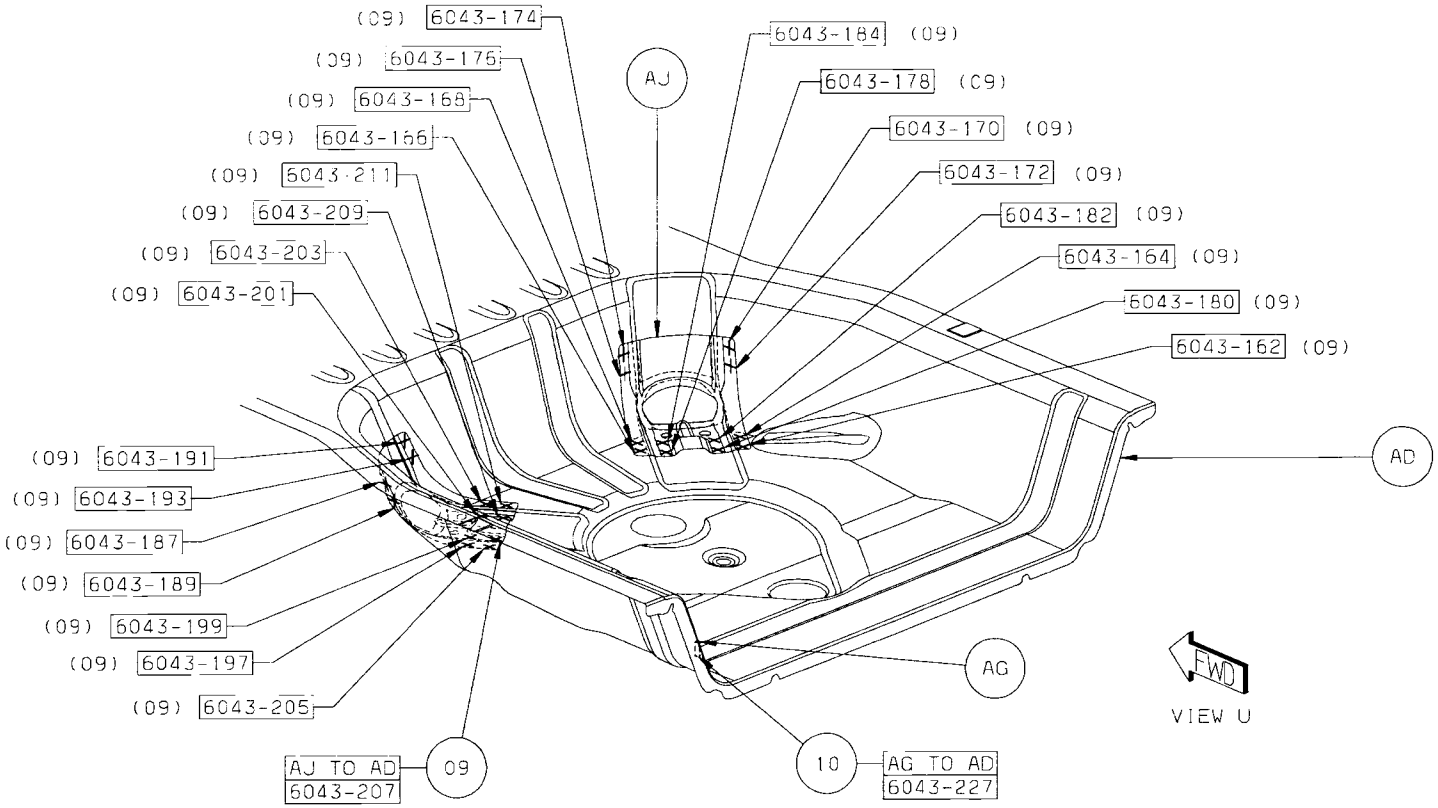

Back to Index

11 AM TO AD 26 S/WELDS (ORD)
12 AK TO AM 1 PROJ WELD
13 AL TO AM TO AD 6 S/WELDS (ORD)

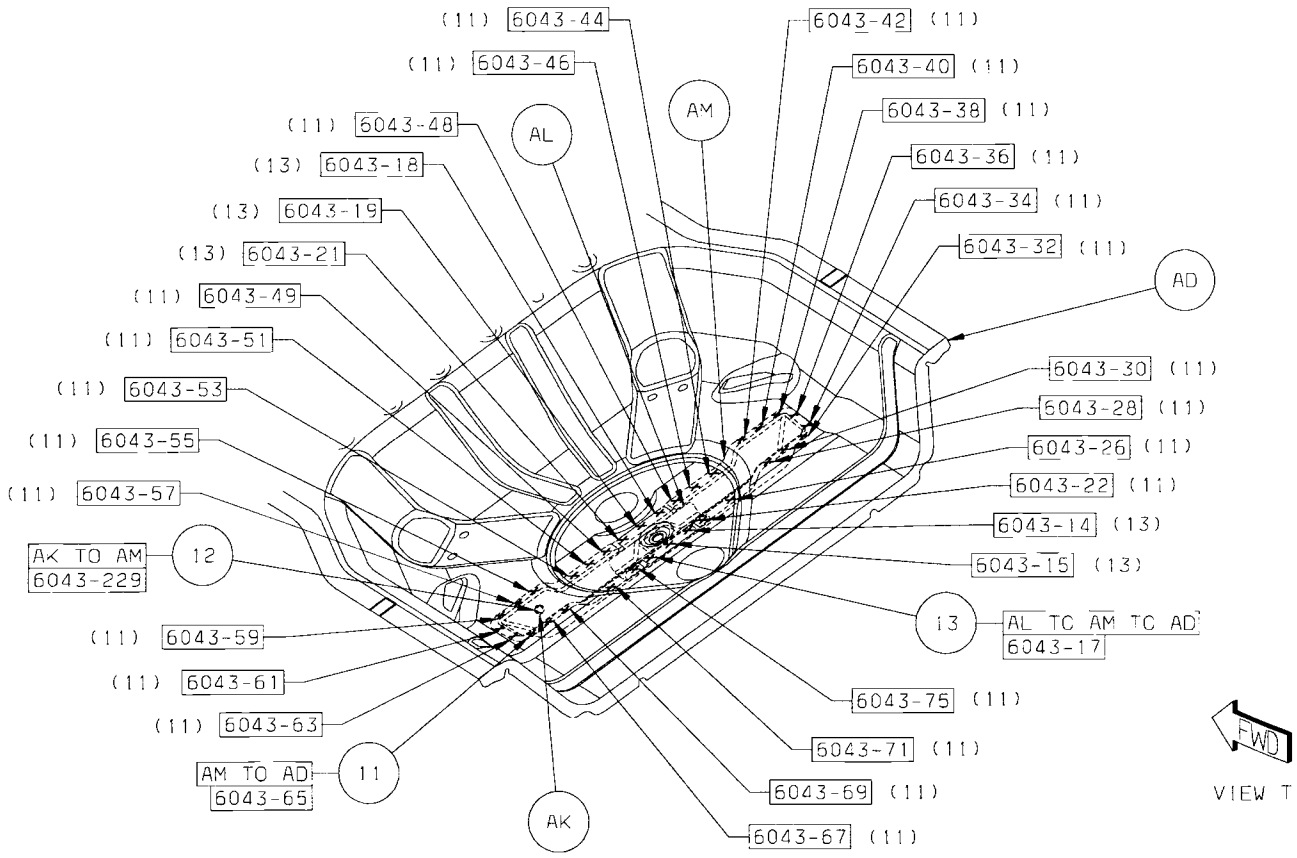

Back to Index

CHRYSLER SEBRING UNDERBODY COMPLETE SECTION

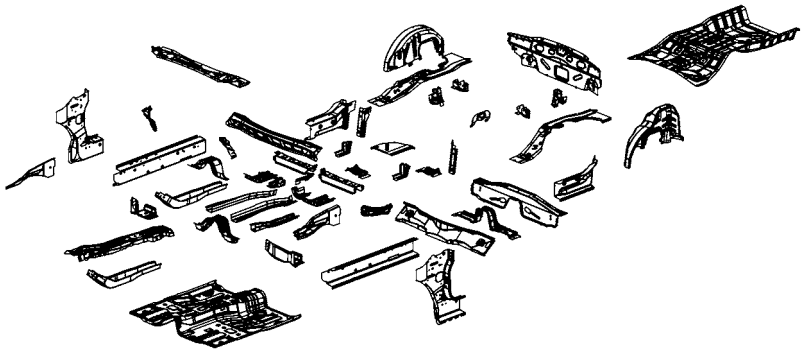

AA PANEL – DASH –
AB SILL – FRT FLOOR PAN RT –
AB SILL – FRT FLOOR PAN LT –
AC PAN – FRT FLOOR –
AD BEAM – LOAD PATH INR UPR RT –
AD BEAM – LOAD PATH INR UPR LT –
AE CROSSMEMBER – DASH –
AE CROSSMEMBER – DASH –
AF PANEL – COWL TOP LOWER –
AG PANEL – COWL TOP UPPER –
AH PANEL – COWL TOP INNER –
AJ REINF – SHOCK TOWER MOUNTING FRT RT –
AJ REINF – SHOCK TOWER MOUNTING FRT LT –
AK CROSSMEMBER – FRT FLOOR PAN FRT RT –
AK CROSSMEMBER – FRT FLOOR PAN FRT LT –
AL SILL – RR FLOOR SIDEMEMBER RT –
AL SILL – RR FLOOR SIDEMEMBER LT –
AM REINF – FRT FLOOR RT –
AN BRACE – TORQUE BOX RT –
AN BRACE – TORQUE BOX LT –
AP GUSSET – KICKUP CROSSMEMBER –
AR EXTENSION – SIDEMEMBER FRT FLOOR LT –
AR EXTENSION – SIDEMEMBER FRT FLOOR RT –
AS EXTENSION – RR FLOOR –
AT BULKHEAD – REINF –
AU PLATE – SIDE SILL RT –
AU PLATE – SIDE SILL LT –
AV SIDEMEMBER – RR FLOOR UPR RT –
AV SIDEMEMBER – RR FLOOR UPR LT –
AW PANEL – SPRING RR –
AW PANEL – SPRING RR –
AW PANEL – SPRING RR –
AW PANEL – SPRING RR –
AX PANEL – RR WHEELHOUSE INR RT –
AX PANEL – RR WHEELHOUSE INR LT –
AY REINF – SUSPENSION RR RT –
AY REINF – SUSPENSION RR LT –
AZ REINF – FRT FLOOR RR –
AZ REINF – FRT FLOOR RR –
BA SIDEMEMBER – FRT FLOOR –
BB RAIL – TUNNEL FRT RT –
BB RAIL – TUNNEL FRT LT –
BC PLATE – FRT FLOOR PAN FRT SEAT UPR RT –
BC PLATE – FRT FLOOR PAN FRT SEAT UPR LT –
BD REINF – TUNNEL –
BE CROSSMEMBER – FRT FLOOR RR –
BF REINF – EXTENSION FRT RAIL INR RT –
BF REINF – EXTENSION FRT RAIL INR LT –
BG PANEL – EXTENSION FRT RAIL INR RT –
BG PANEL – EXTENSION FRT RAIL INR LT –
BH EXTENSION – RAIL FRT RT –
BH EXTENSION – RAIL FRT LT –
BJ EXTENSION – DASH LWR –
BJ EXTENSION – DASH LWR –
BK PANEL – DASH LWR –
BL CROSSMEMBER – DASH –
BM REINF – TUNNEL –
BN PAN – RR FLOOR PAN –
BP BULKHEAD – REINF
BR REINF – BULKHEAD –
BR REINF – BULKHEAD – NONE.
BS BULKHEAD – REINF –
BT PANEL – RR CLOSURE OTR –
BU SUPPORT – RR BUMPER RT –
BU SUPPORT – RR BUMPER LT –
BV EXTENSION – RR FLOOR SIDEMEMBER RT –
BV EXTENSION – RR FLOOR SIDEMEMBER LT –
BW REINF – SEAT BACK MTG RT –
BW REINF – SEAT BACK MTG LT –
BY PLATE – FRT FLOOR PAN FRT SEAT LWR RT –
BY PLATE – FRT FLOOR –
BY PLATE – FRT FLOOR –

Back to Index

PARTS IDENTIFICATION LEGEND, OVERVIEW 23

AA PANEL – DASH –
AB SILL – FRT FLOOR PAN RT –
AB SILL – FRT FLOOR PAN LT –
AC PAN – FRT FLOOR –
AD BEAM – LOAD PATH INR UPR RT –
AD BEAM – LOAD PATH INR UPR LT –
AE CROSSMEMBER – DASH –
AE CROSSMEMBER – DASH –
AF PANEL – COWL TOP LOWER –
AG PANEL – COWL TOP UPPER –
AH PANEL – COWL TOP INNER –
AJ REINF – SHOCK TOWER MOUNTING FRT RT –
AJ REINF – SHOCK TOWER MOUNTING FRT LT –
AK CROSSMEMBER – FRT FLOOR PAN FRT RT –
AK CROSSMEMBER – FRT FLOOR PAN FRT LT –
AL SILL – RR FLOOR SIDEMEMBER RT –
AL SILL – RR FLOOR SIDEMEMBER LT –
AM REINF – FRT FLOOR RT –
AN BRACE – TORQUE BOX RT –
AN BRACE – TORQUE BOX LT –
AP GUSSET – KICKUP CROSSMEMBER –
AR EXTENSION – SIDEMEMBER FRT FLOOR LT –
AR EXTENSION – SIDEMEMBER FRT FLOOR RT –
AS EXTENSION – RR FLOOR –
AT BULKHEAD – REINF –
AU PLATE – SIDE SILL RT –
AU PLATE – SIDE SILL LT –
AV SIDEMEMBER – RR FLOOR UPR RT –
AV SIDEMEMBER – RR FLOOR UPR LT –
AW PANEL – SPRING RR –
AW PANEL – SPRING RR –
AW PANEL – SPRING RR –
AW PANEL – SPRING RR –
AX PANEL – RR WHEELHOUSE INR RT –
AX PANEL – RR WHEELHOUSE INR LT –
AY REINF – SUSPENSION RR RT –
AY REINF – SUSPENSION RR LT –
AZ REINF – FRT FLOOR RR –
AZ REINF – FRT FLOOR RR –
BA SIDEMEMBER – FRT FLOOR –
BB RAIL – TUNNEL FRT RT –
BB RAIL – TUNNEL FRT LT –
BC PLATE – FRT FLOOR PAN FRT SEAT UPR RT –
BC PLATE – FRT FLOOR PAN FRT SEAT UPR LT –
BD REINF – TUNNEL –
BE CROSSMEMBER – FRT FLOOR RR –
BF REINF – EXTENSION FRT RAIL INR RT –
BF REINF – EXTENSION FRT RAIL INR LT –
BG PANEL – EXTENSION FRT RAIL INR RT –
BG PANEL – EXTENSION FRT RAIL INR LT –
BH EXTENSION – RAIL FRT RT –
BH EXTENSION – RAIL FRT LT –
BJ EXTENSION – DASH LWR –
BJ EXTENSION – DASH LWR –
BK PANEL – DASH LWR –
BL CROSSMEMBER – DASH –
BM REINF – TUNNEL –
BN PAN – RR FLOOR PAN –
BP BULKHEAD – REINF
BR REINF – BULKHEAD –
BR REINF – BULKHEAD – NONE.
BS BULKHEAD – REINF –
BT PANEL – RR CLOSURE OTR –
BU SUPPORT – RR BUMPER RT –
BU SUPPORT – RR BUMPER LT –
BV EXTENSION – RR FLOOR SIDEMEMBER RT –
BV EXTENSION – RR FLOOR SIDEMEMBER LT –
BW REINF – SEAT BACK MTG RT –
BW REINF – SEAT BACK MTG LT –
BY PLATE – FRT FLOOR PAN FRT SEAT LWR RT –
BY PLATE – FRT FLOOR –
BY PLATE – FRT FLOOR –

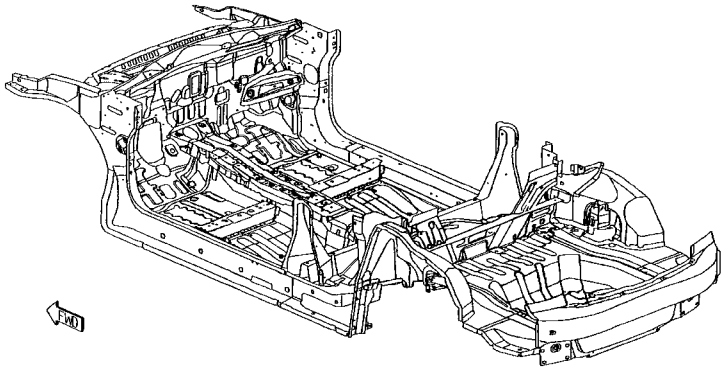

Back to Index

WELD LAYOUT LOCATION GUIDE

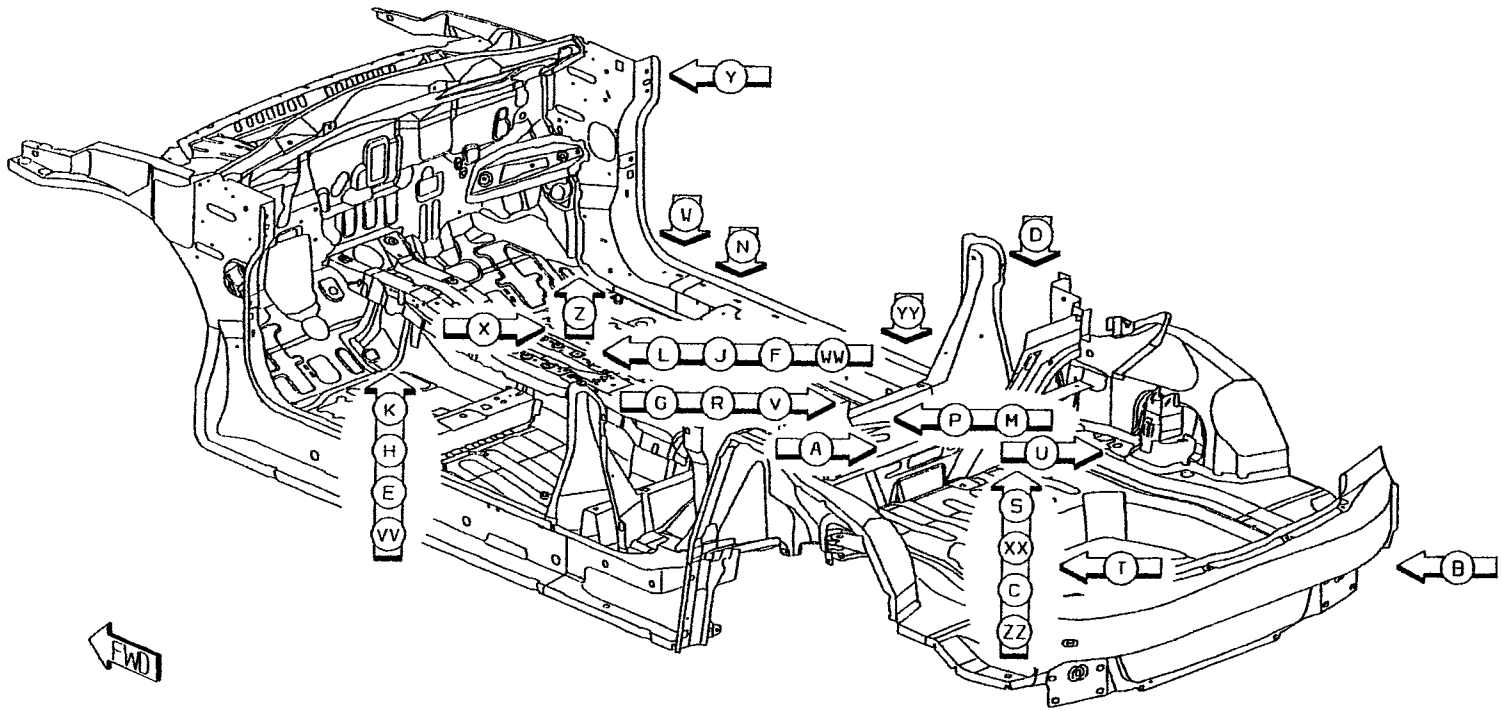

Back to Index

01 AA TO AD TO AB 3/SD S/WELDS (ORD)
02 AE TO AA TO AB 2/SD S/WELDS (ORD)
03 AE TO AB 3/SD S/WELDS (ORD)
04 AA TO AB 9/SD S/WELDS (ORD)
05 AC TO AA 1/SD S/WELD (ORD)
06 AF TO AD TO AB 4/SD S/WELDS (ORD)
07 AB TO AD TO AG 2/SD S/WELDS (ORD)
08 AH TO AB 6/SD S/WELDS (ORD)
09 AB TO AH TO AD 1/SD S/WELD (ORD)
10 AD TO AB 3/SD S/WELDS (ORD)
11 AJ TO AD TO AB 2/SD S/WELDS (ORD)

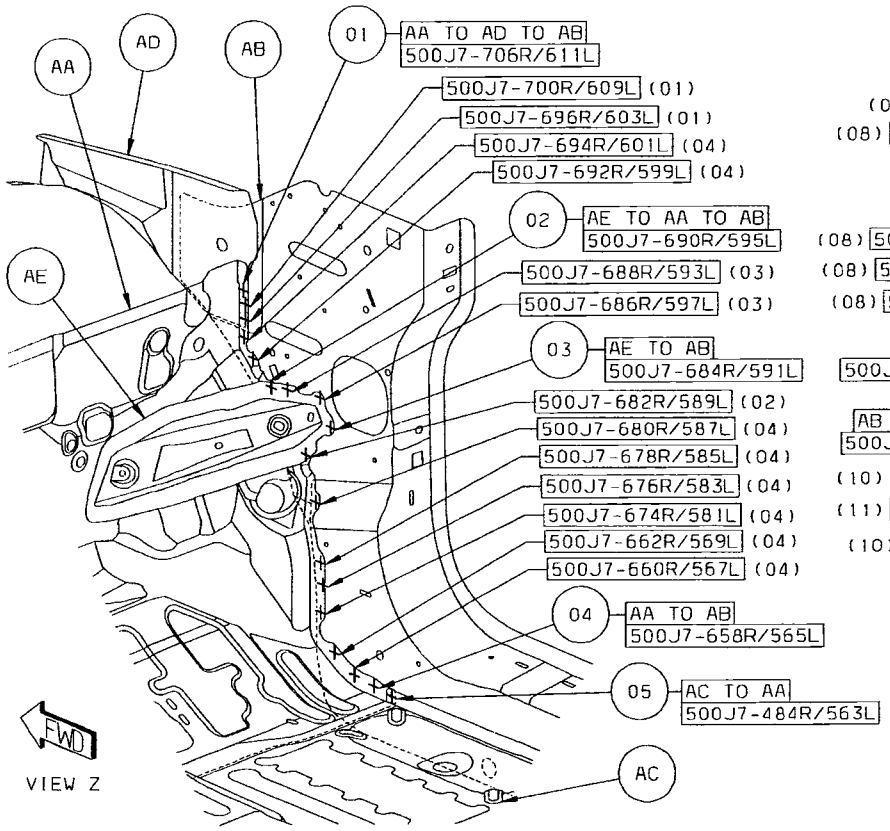

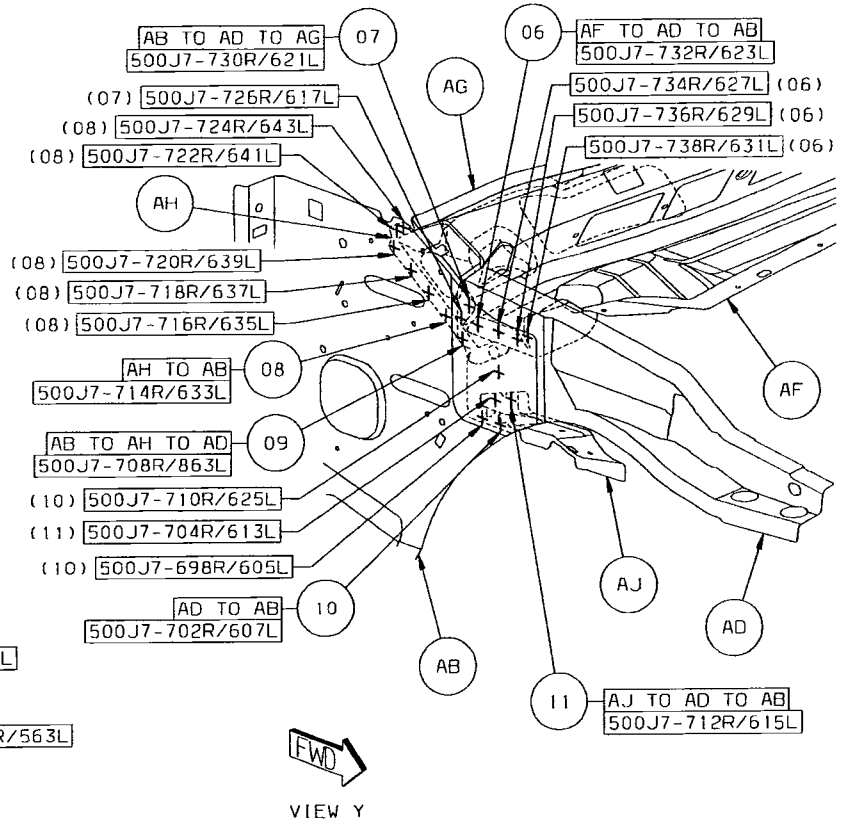

Back to Index

12 AC TO AB 20/SD S/WELDS (ORD)
13 AK TO AB 6/SD S/WELDS (ORD)
14 AL TO AB 9/SD S/WELDS (ORD)
15 AC TO AL TO AB 2/SD S/WELDS (ORD)
16 AC TO AL 1/SD S/WELD (ORD)

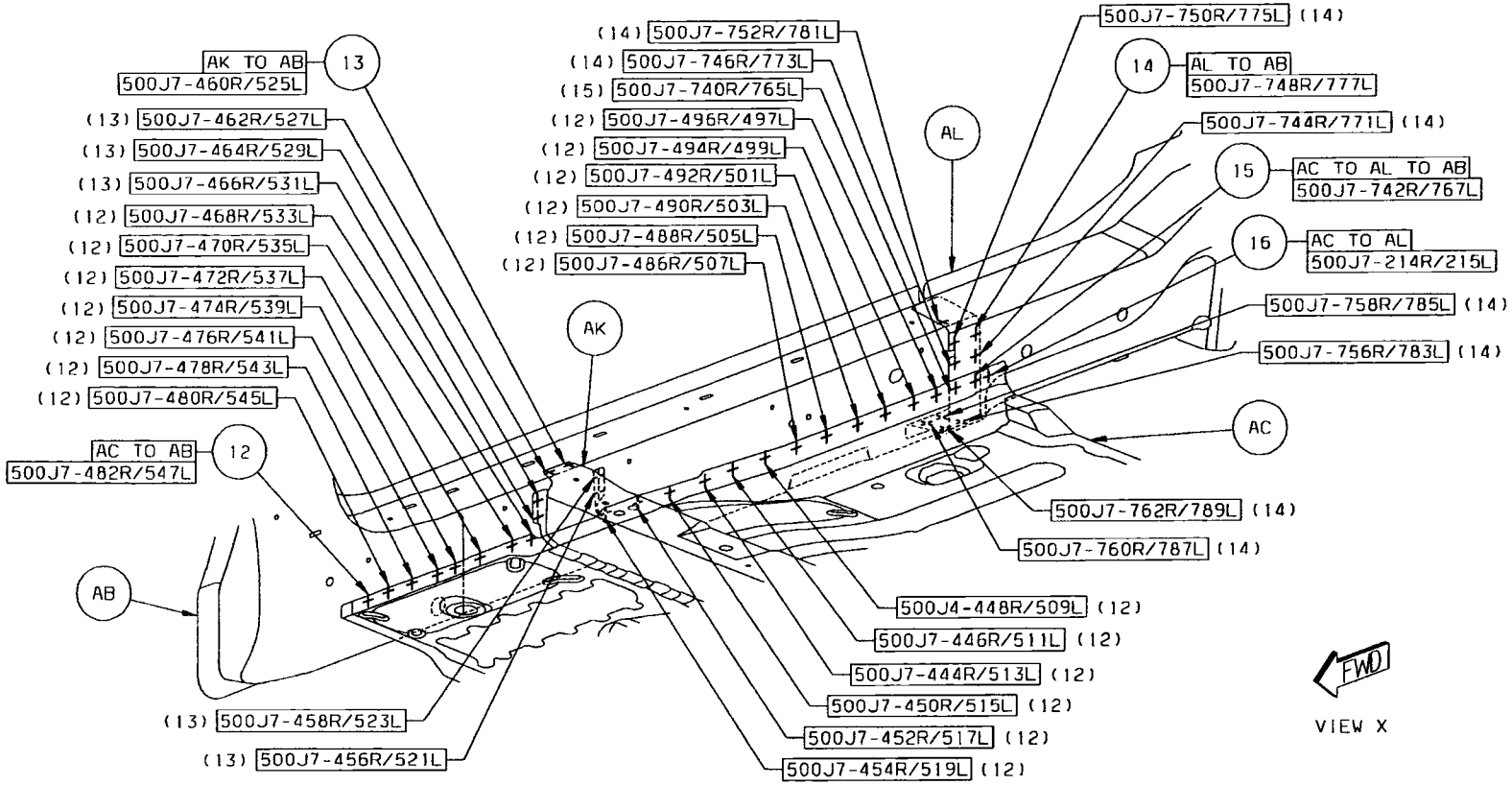

Back to Index

17 AM TO AB 6/SD S/WELDS (ORD)
18 AN TO AB 10/SD S/WELDS (ORD)

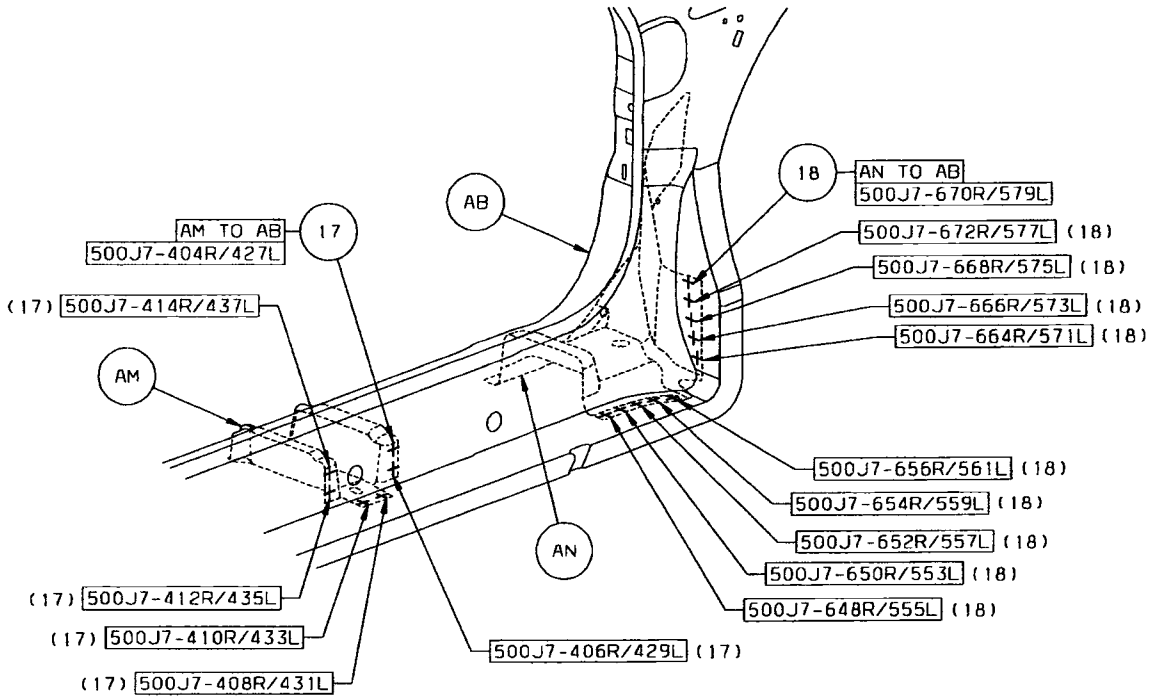

Back to Index

19 AP TO AL TO AB 3/SD S/WELDS (ORD)
20 AS TO AC TO AL 1/SD S/WELD (ORD)
21 AS TO AC TO AR 2/SD S/WELDS (ORD)
22 AP TO AS 2/SD S/WELDS (ORD)
23 AS TO AC 19 S/WELDS (ORD)

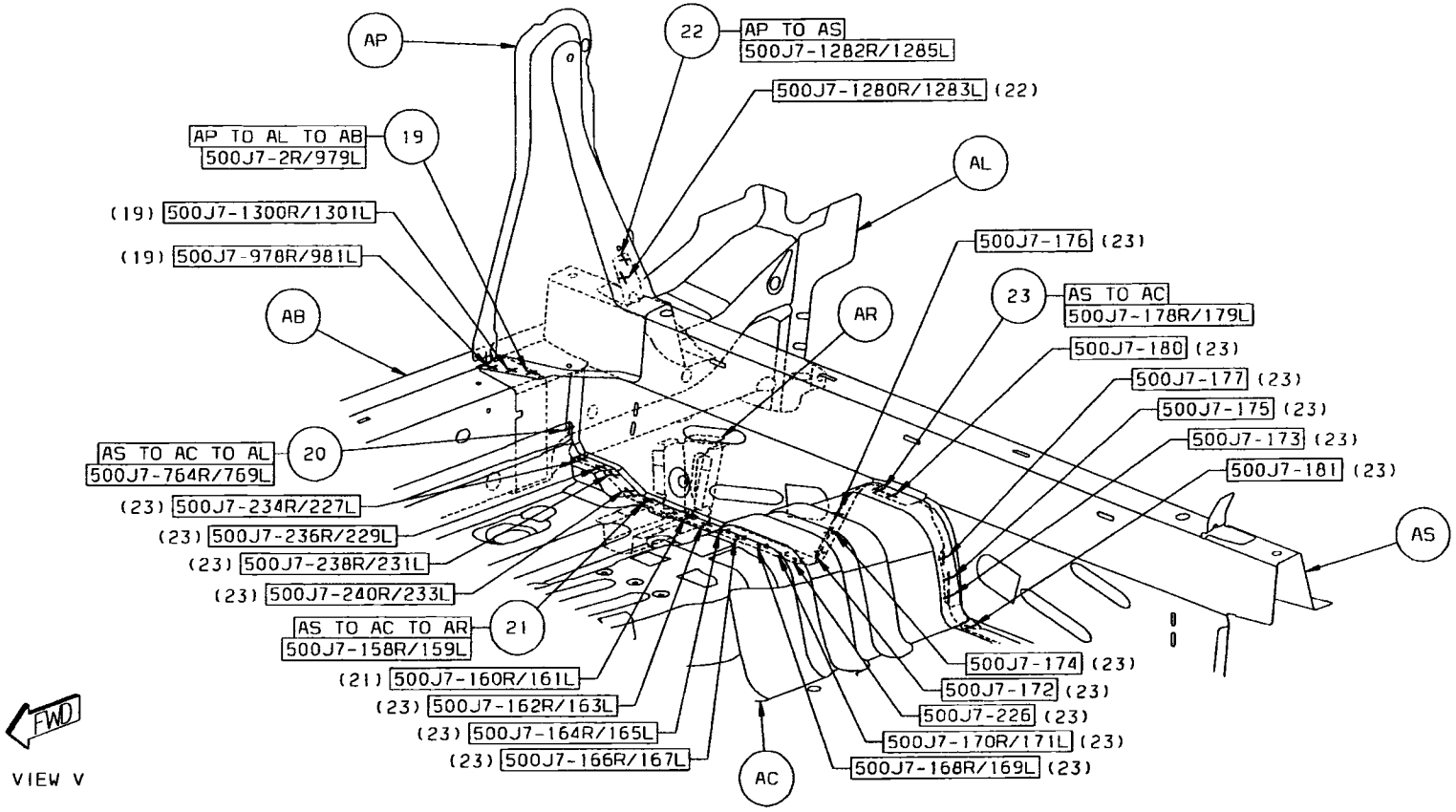

Back to Index

24 AL TO AU TO AX 2/SD S/WELDS (ORD)
25 AV TO AU TO AX 2/SD S/WELDS (ORD)
26 AY TO AX TO AW 4/SD S/WELDS (ORD)
27 AW TO AX 8/SD S/WELDS (ORD)
28 AV TO AX TO AW 2/SD S/WELDS (ORD)
29 AV TO AX 13R/8L S/WELDS (ORD)
30 AV TO AT TO AX 2/SD S/WELDS (ORD)

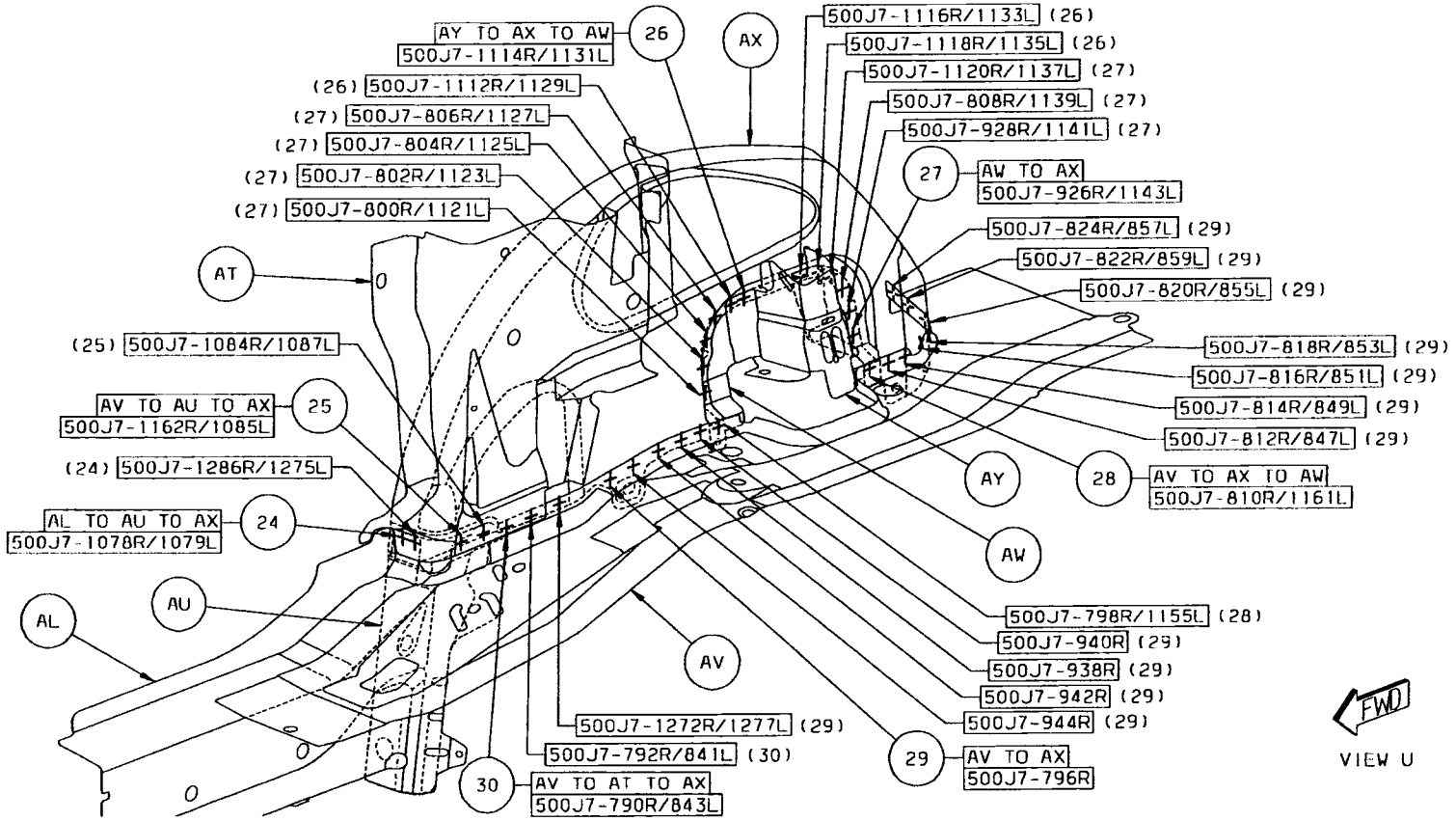

Back to Index

31 AV TO AX 6 S/WELDS (ORD)
32 AP TO AL 2/SD S/WELDS (ORD)

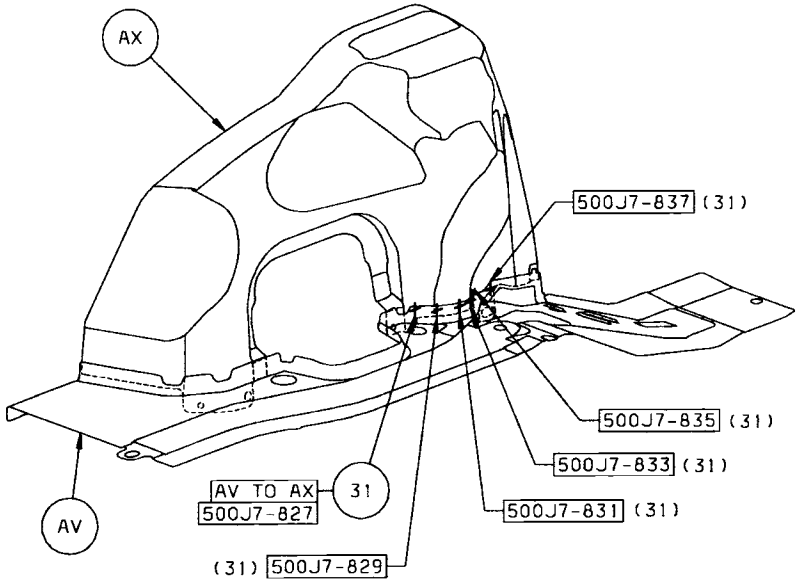

VIEW T
LEFT SIDE ONLY

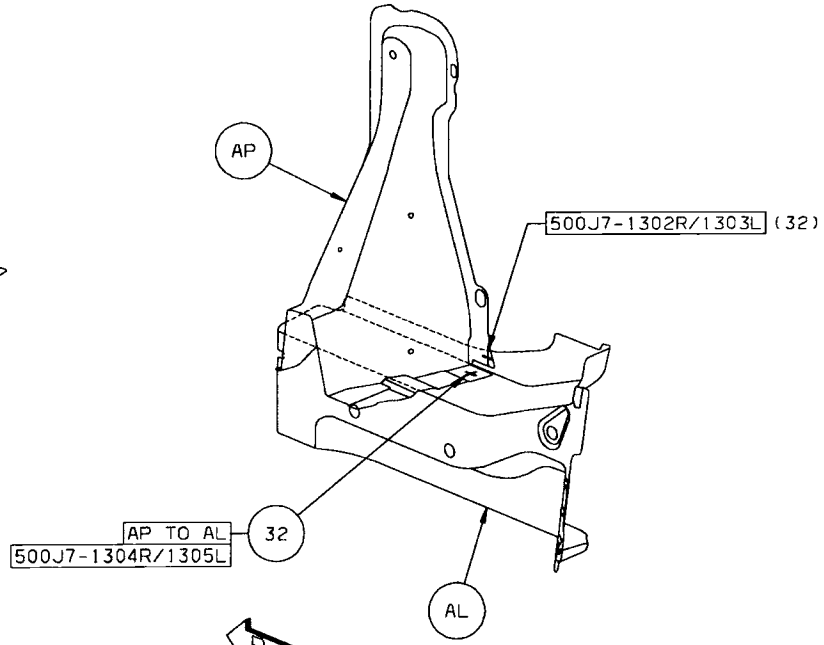

VIEW S

Back to Index

33 AZ TO AB 5/SD S/WELDS (CRT)
34 AZ TO AC 4/SD S/WELDS (CRT)
35 AZ TO BY TO AC 2/SD S/WELDS (CRT)
36 AR TO BA 4/SD S/WELDS (ORD)
37 AC TO BC TO BE 2/SD S/WELDS (CRT
38 BD TO AC TO BE 2/SD S/WELDS (CRT)
39 AC TO BE TO BC 1/SD S/WELDS (CRT)
40 AC TO BE 4/SD S/WELDS (CRT)
41 AC TO BE 5/SD S/WELDS (ORD)

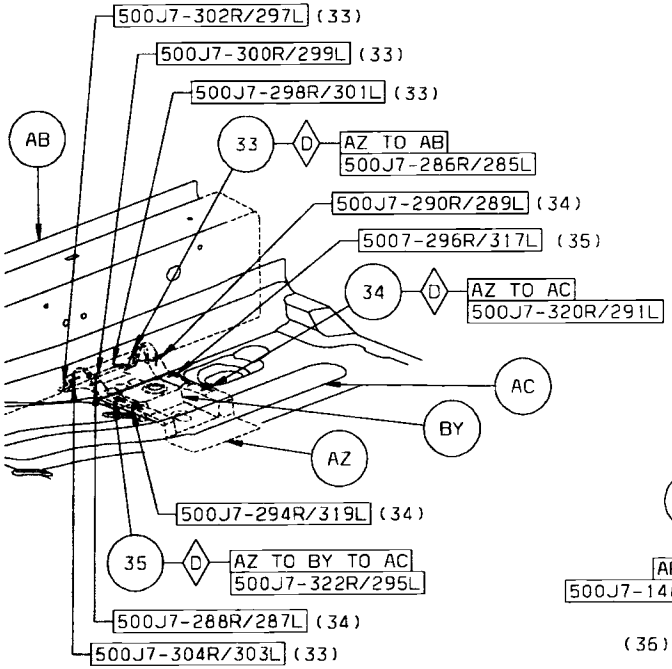

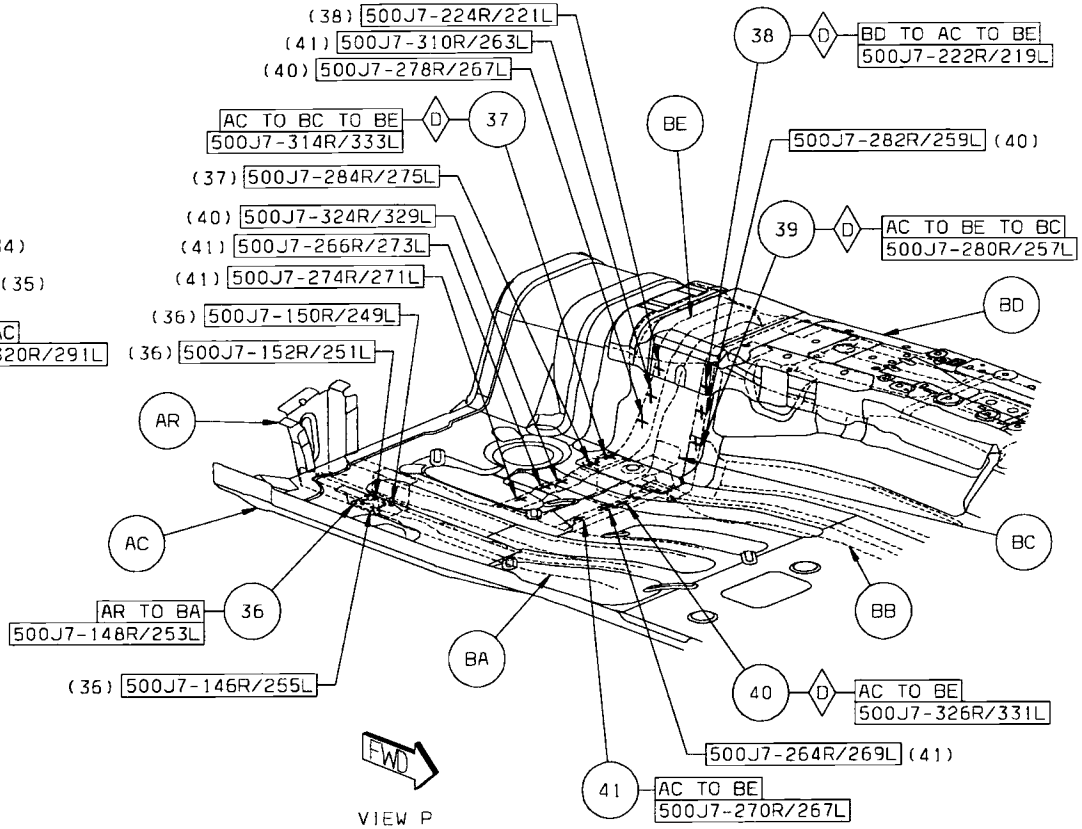

Back to Index

42 BG TO AC 3/SD S/WELDS (ORD)
43 BG TO BF TO AC 7/SD S/WELDS (ORD)
44 BG TO BA TO AC 4/SD S/WELDS (ORD)
45 BG TO AC TO AK 4/SD S/WELDS (ORD)
46 BA TO AR TO AC 4/SD S/WELDS (ORD)
47 AR TO AC 2/SD S/WELDS (ORD)
48 BA TO AC 12/SD S/WELDS (ORD)
49 AG TO AC 6/SD S/WELDS (ORD)

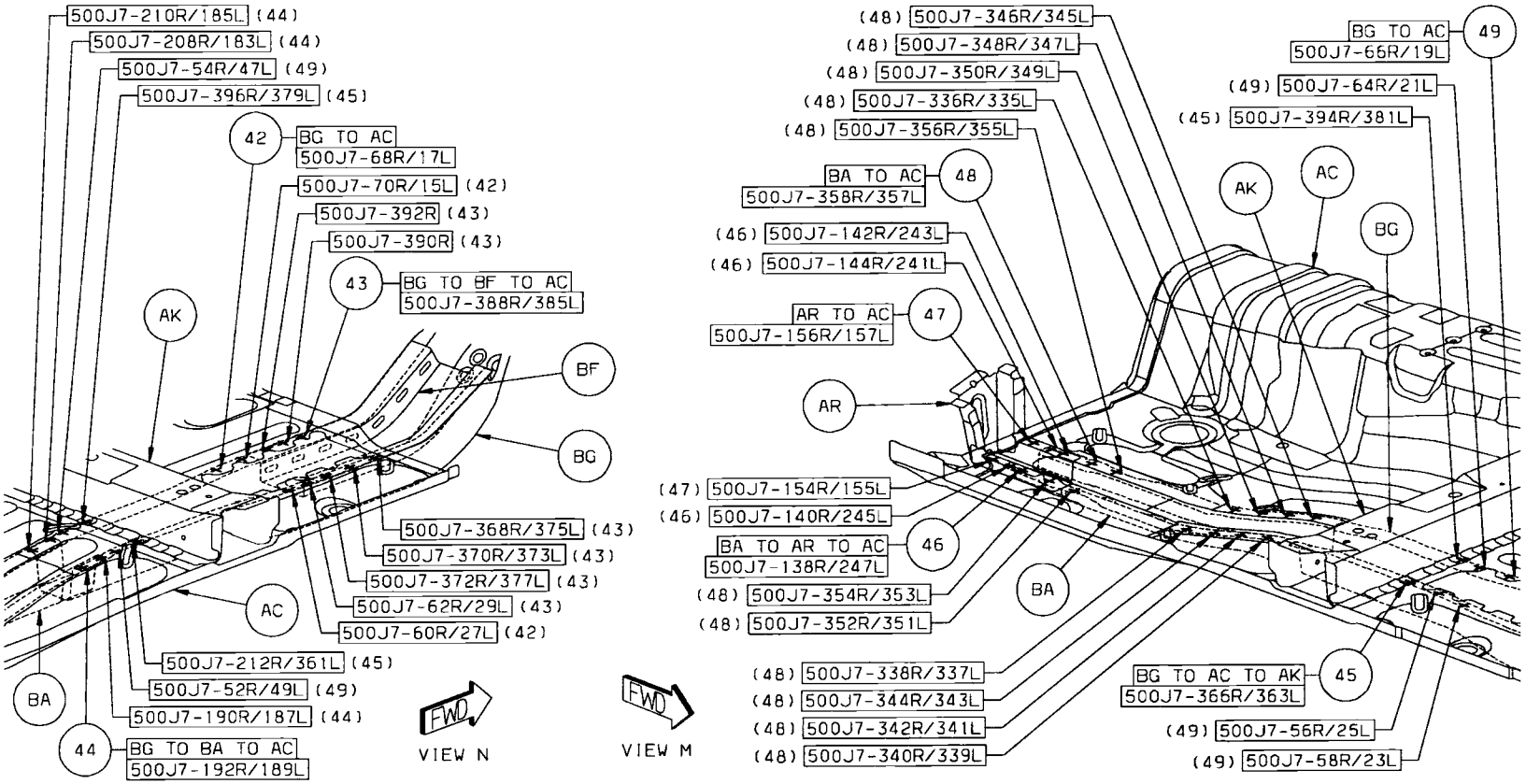

Back to Index

50 BB TO BH TO AC 6R/6L S/WELDS (ORD)
51 BH TO AA TO AC 1 S/WELD (ORD)
52 BJ TO AA TO AC 2R/3L S/WELDS (ORD)
53 AN TO AA TO AC 3/SD S/WELDS (ORD)
54 AA TO AC 3R S/WELDS (ORD)
55 BG TO BF TO AC 2 S/WELDS (ORD)

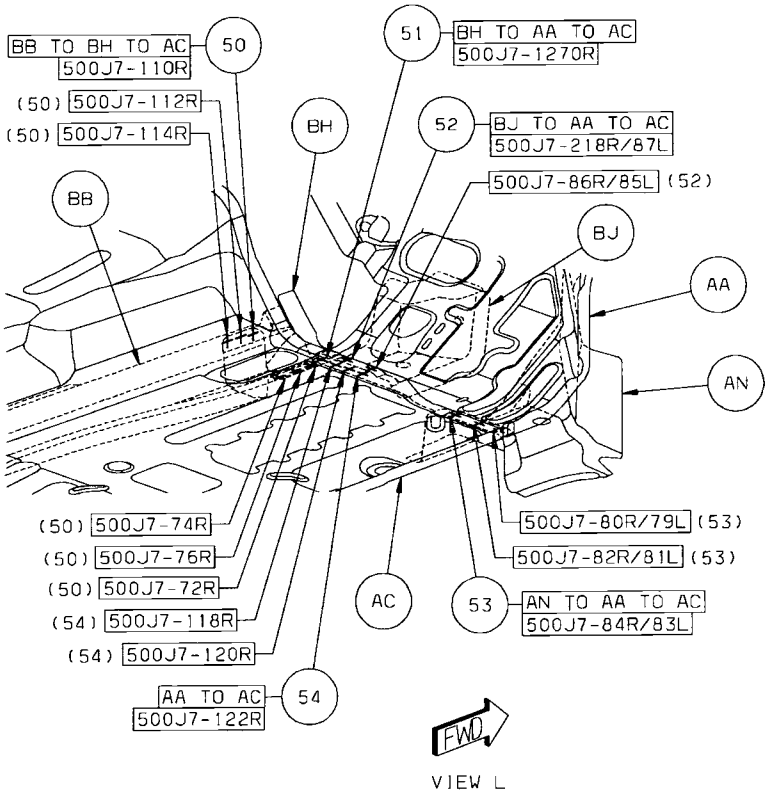

VIEW L

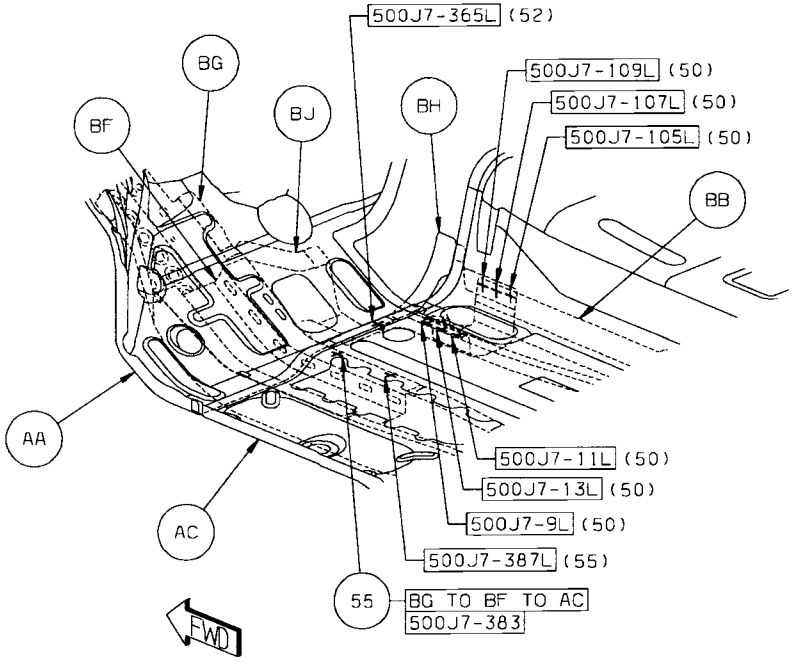

VIEW K
(LEFT SIDE ONLY)

Back to Index

56 BH TO BB 8 S/WELDS (ORD)
57 BG TO BA 8/SD S/WELDS (ORD)

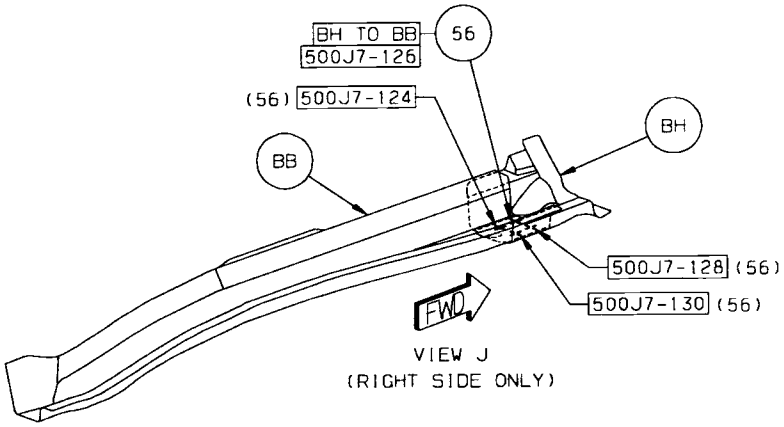

VIEW J
(RIGHT SIDE ONLY)

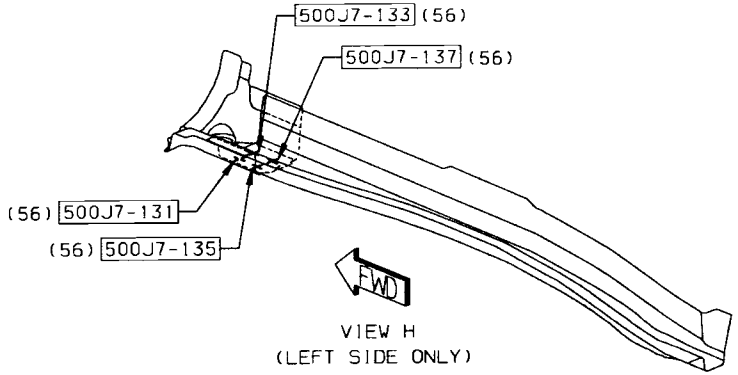

VIEW H
(LEFT SIDE ONLY)

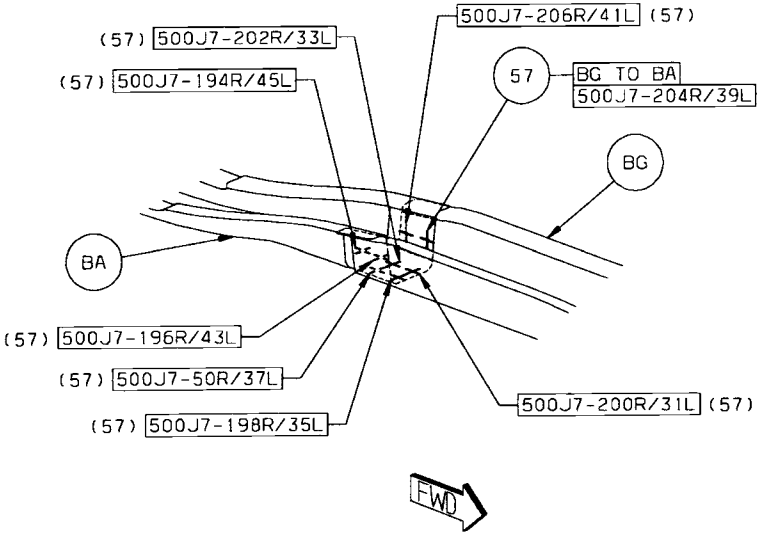

VIEW G

Back to Index

58 BK TO AC TO BD 1 S/WELD (ORD)
59 BD TO BK TO BL 2 S/WELDS (ORD)
60 BD TO BM TO AA 4 S/WELDS (ORD)
61 AC TO BK TO AL 5 S/WELDS (ORD)

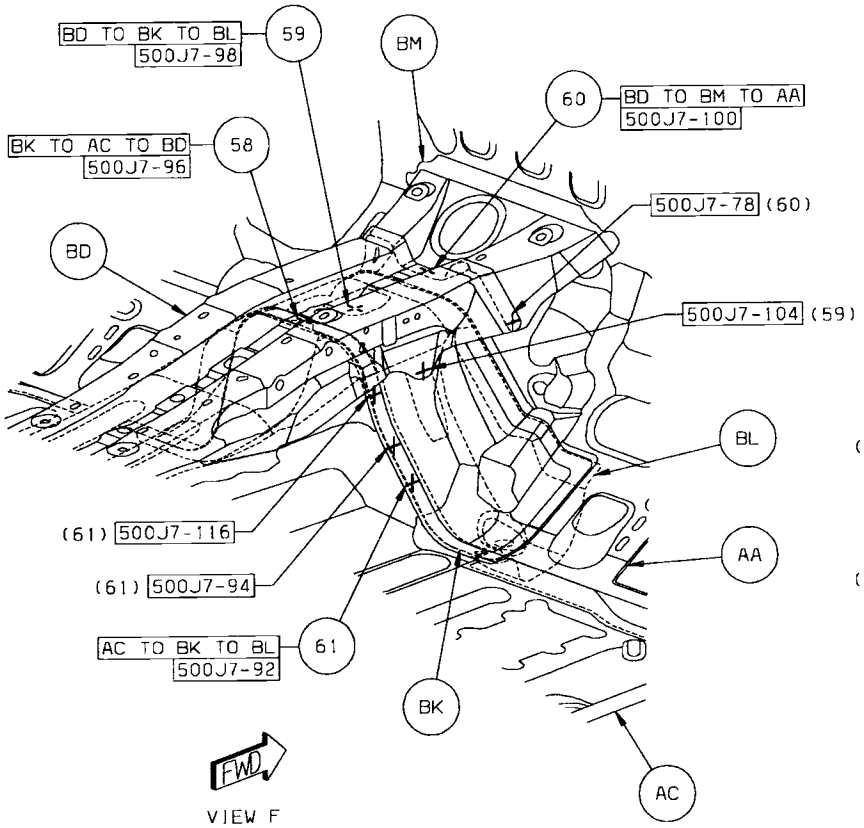

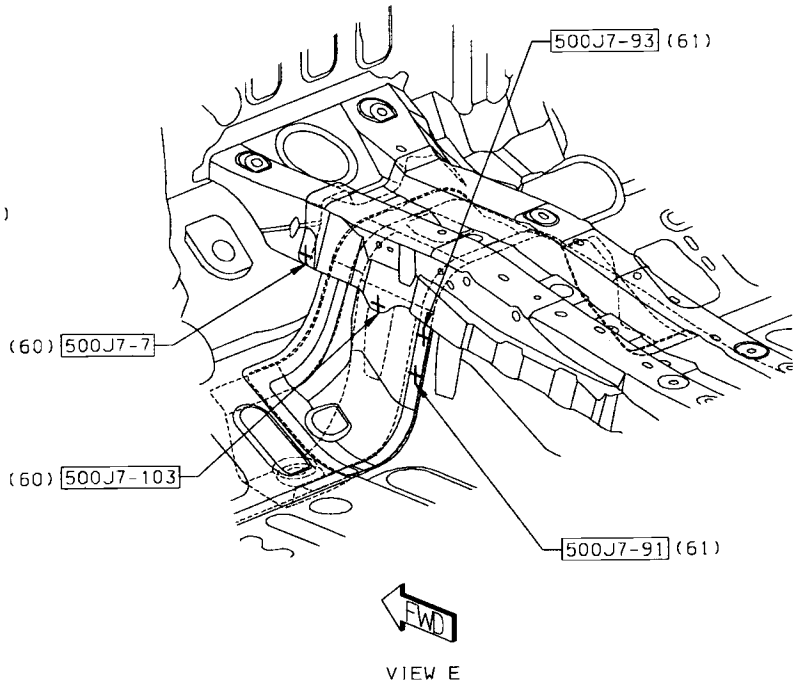

Back to Index

62 BN TO BR 4/SD S/WELDS (ORD)
63 BN TO BP 2/SD S/WELDS (ORD)
64 BN TO AS 6/SD S/WELDS (ORD)

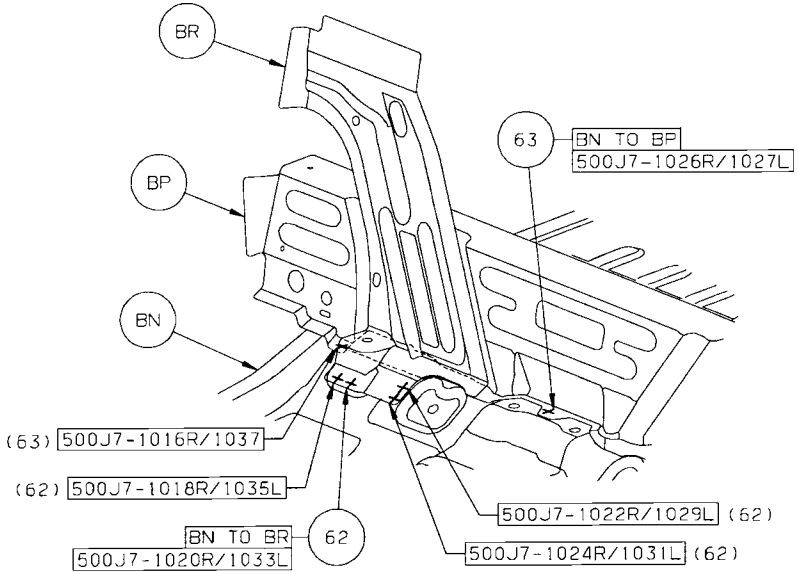

VIEW D

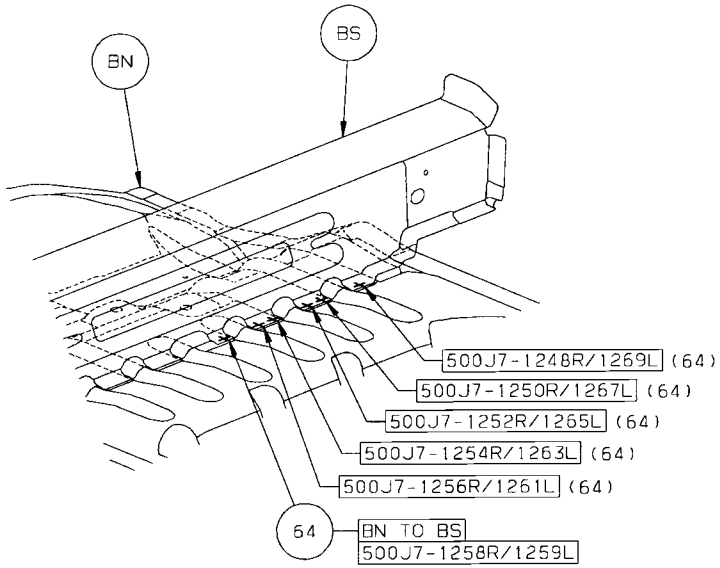

VIEW C

Back to Index

65 BN TO BT 27 S/WELDS (ORD)
66 BV TO BT 6/SD S/WELDS (ORD)
67 BU TO BT 4/SD S/WELDS (ORD)

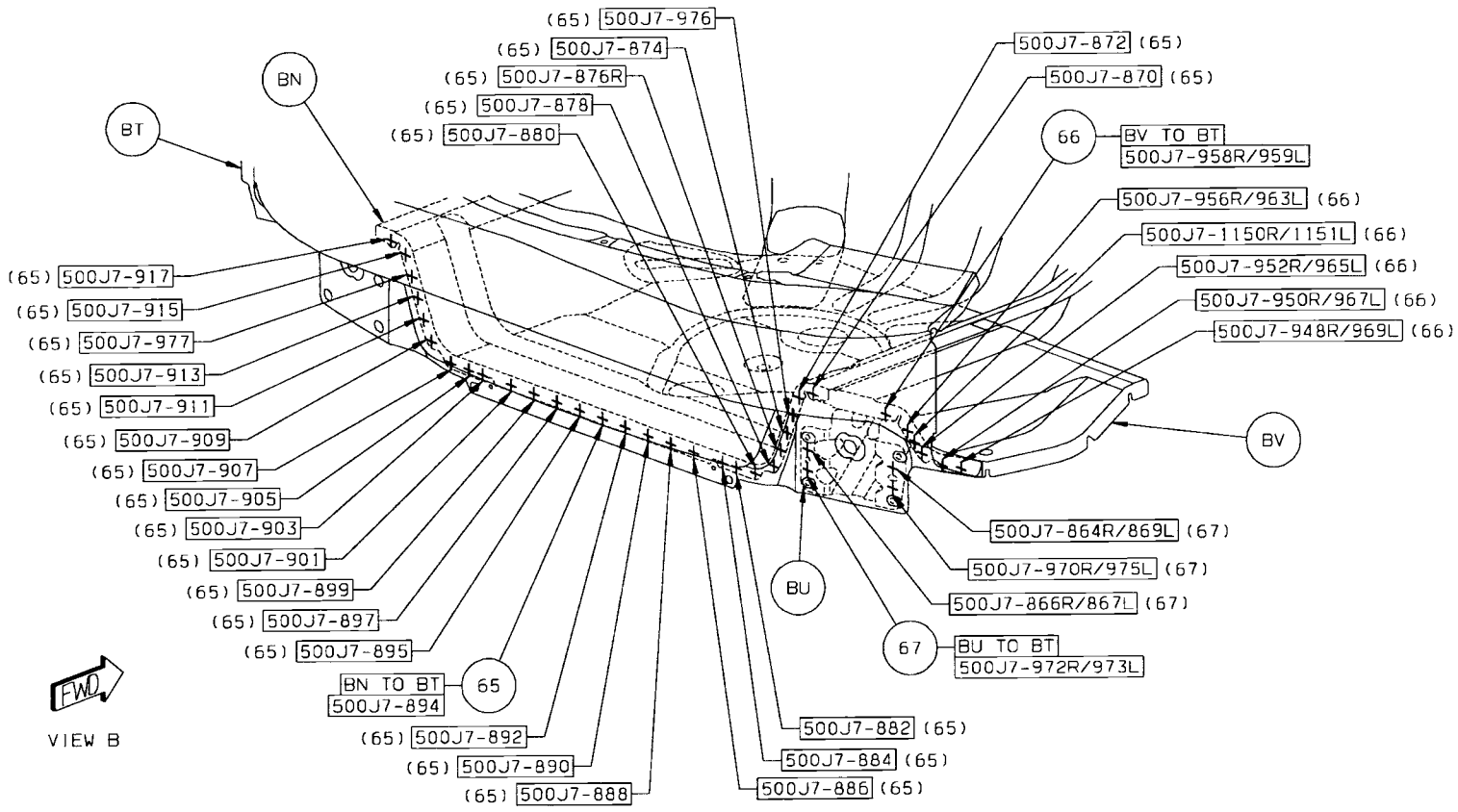

Back to Index

68 AT TO AU TO AV TO AL 1/SD STRUC ADH
69 BP TO AV TO AN 1/SD STRUC ADH
70 AN TO AV 1/SD STRUC ADH
71 AN TO AV 1/SD STRUC ADH
72 BW TO AN 1/SD STRUC ADH
73 BS TO AV 1R STRUC ADH
74 BS TO AV 1L STRUC ADH
75 BS TO AN 1/SD STRUC ADH
76 BS TO AN 1 STRUC ADH

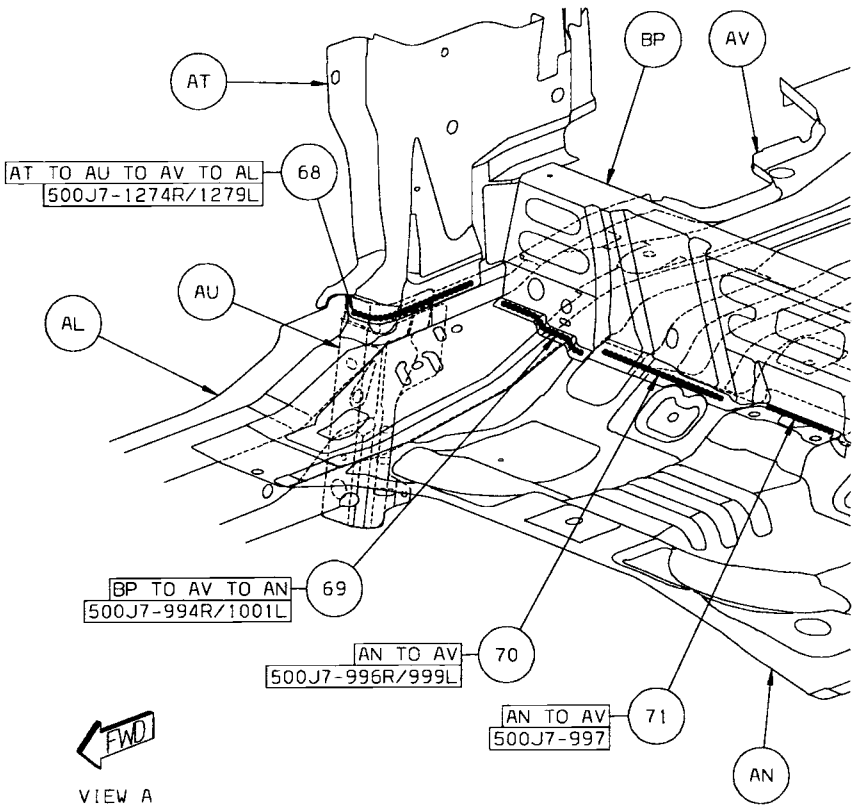

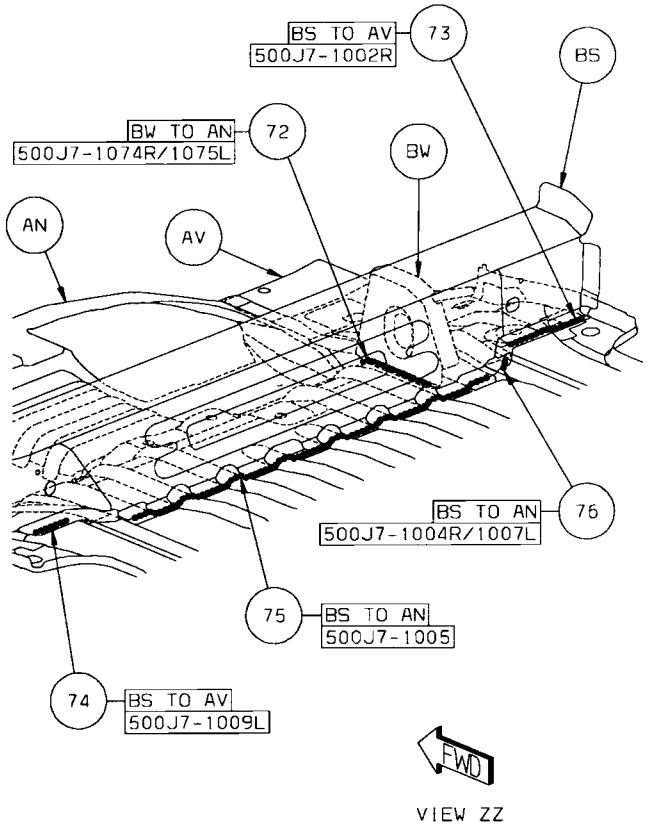

Back to Index

77 BA TO AC 2/SD STRUC ADH
78 AS TO AC 1/SD STRUC ADH
79 AS TO AC 1/SD STRUC ADH
80 AS TO AC 1 STRUC ADH
81 AS TO AC 1 STRUC ADH
82 AS TO AC 1 STRUC ADH
83 BE TO AC 1 STRUC ADH
84 BE TO AC 1 STRUC ADH
85 AM TO AC 2/SD STRUC ADH

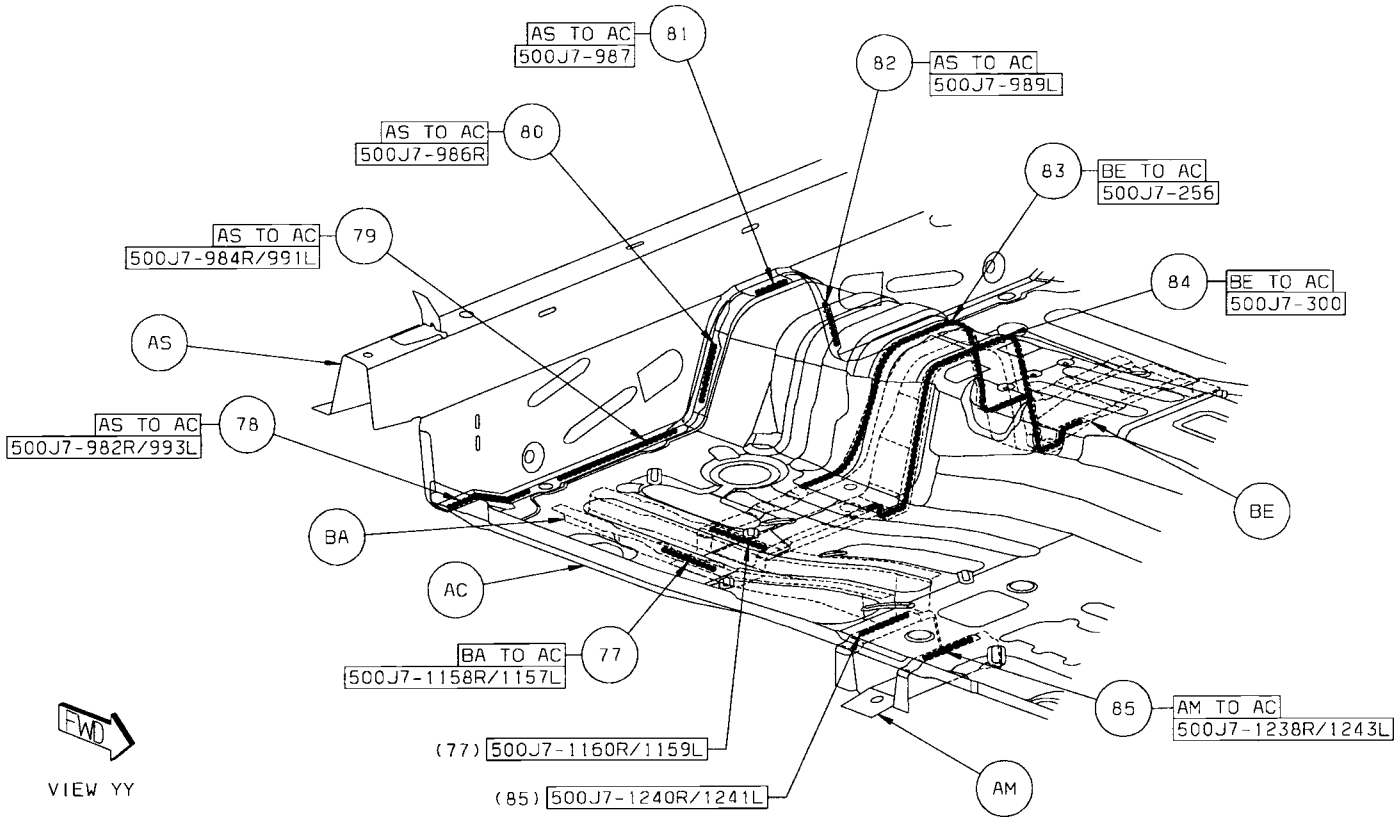

Back to Index

86 AS TO AP 1/SD STRUC ADH
87 AP TO AV TO AL 1/SD STRUC ADH
88 AP TO AV 2/SD ARC WELDS (ORD)
89 AP TO AL 2/SD ARC WELDS (ORD)

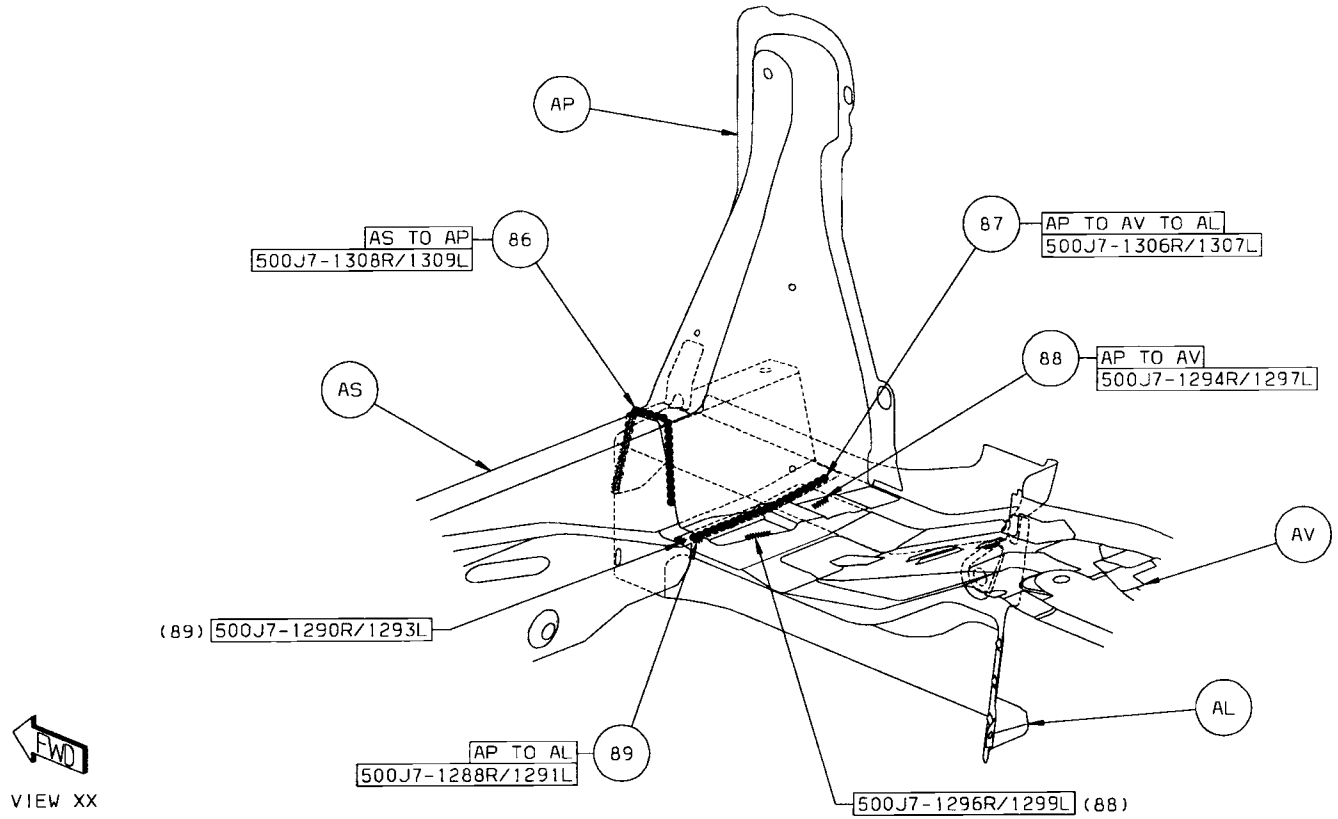

Back to Index

90 BM TO BD 1R/1L ARC WELD (ORD)
91 BK TO AC 2 ARC WELDS (ORD)
92 AA TO AC 1 ARC WELD (ORD)

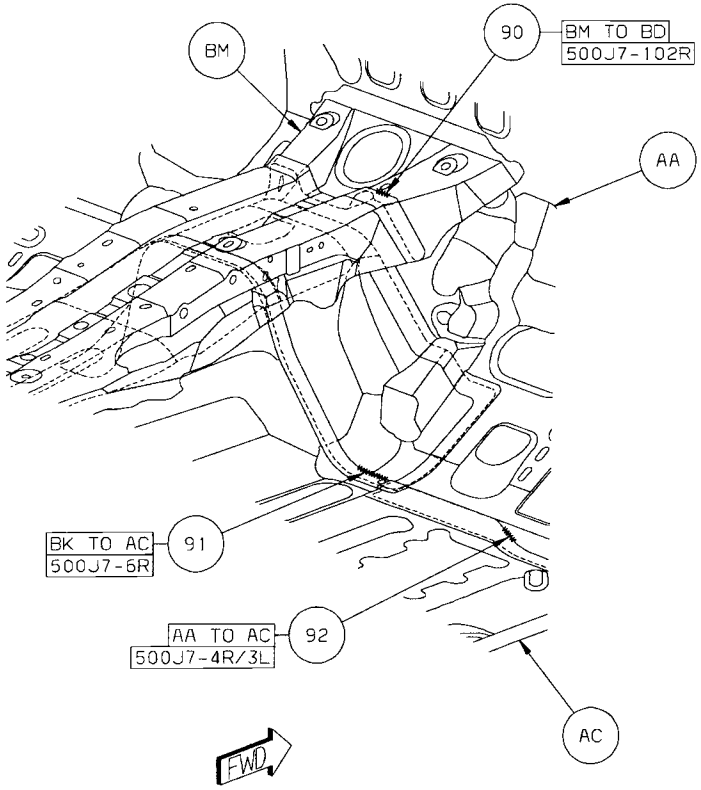

VIEW WW

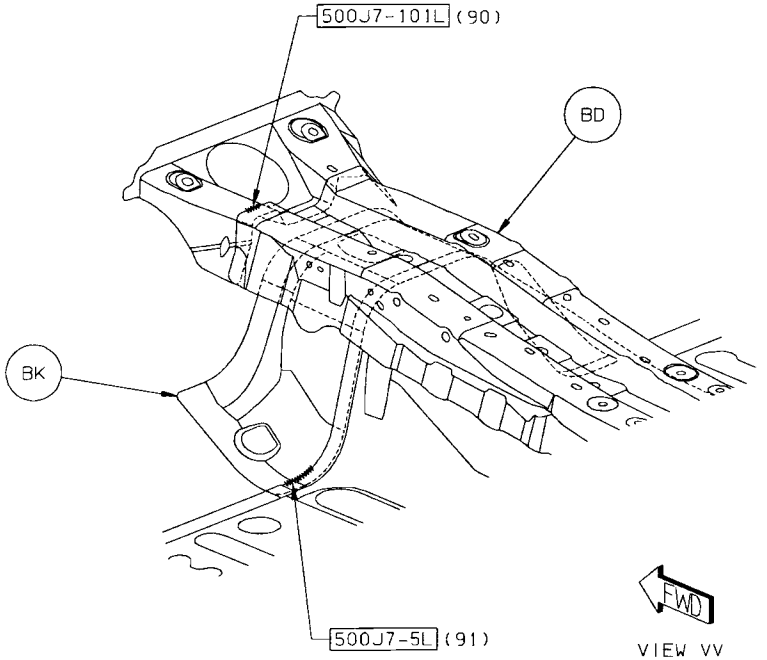

VIEW VV
LEFT SIDE ONLY

Back to Index

CHRYSLER SEBRING/DODGE AVENGER UNDERBODY COMPLETE (COMMON) SECTION

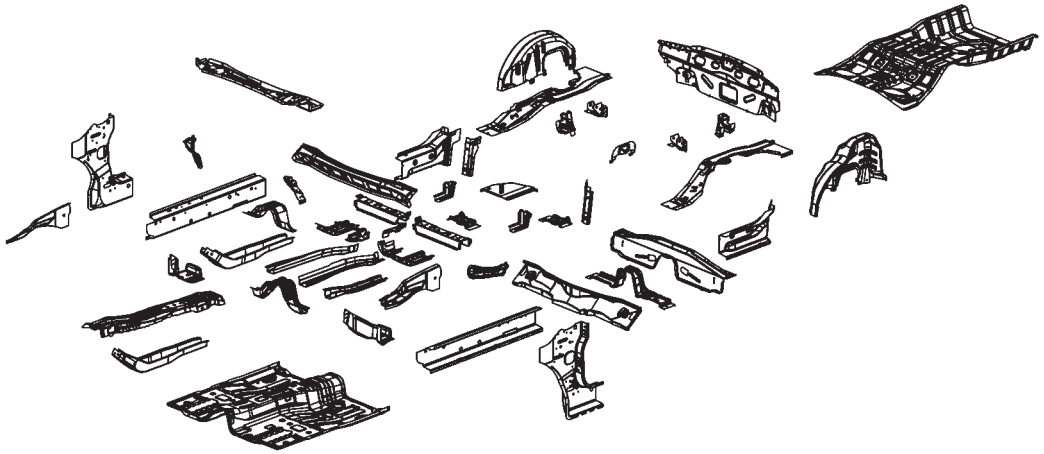

AA PANEL – COWL SIDE RT –
AA PANEL – COWL SIDE LT –
AB BEAM – LOAD PATH INR UPR RT –
AB BEAM – LOAD PATH INR UPR LT –
AC PANEL – COWL TOP LOWER –
AD PANEL – COWL TOP UPPER –
AE REINF – SHOCK TOWER MOUNTING FRT RT –
AE REINF – SHOCK TOWER MOUNTING FRT LT –
AF BRACE – TORQUE BOX RT –
AF BRACE – TORQUE BOX LT –
AG SILL – FRT FLOOR PAN RT –
AG SILL – FRT FLOOR PAN LT –
AH PANEL – COWL TOP INNER –
AJ PANEL – DASH –
AK CROSSMEMBER – DASH –
AK CROSSMEMBER – DASH –
AL PAN – FRT FLOOR –
AM CROSSMEMBER – FRT FLOOR PAN FRT RT –
AM CROSSMEMBER – FRT FLOOR PAN FRT LT –
AN EXTENSION – RAIL FRT RT –
AN EXTENSION – RAIL FRT LT –
AP RAIL – TUNNEL FRT RT –
AP RAIL – TUNNEL FRT LT –
AR CROSSMEMBER – DASH –
AS REINF – TUNNEL –
AT REINF – TUNNEL –
AU PANEL – DASH LWR –
AV REINF – FRT SIDE RAIL BUMPER MOUNTING RT –
AV REINF – FRT SIDE RAIL BUMPER MOUNTING LT –
AW SIDEMEMBER – FRT FLOOR –
AX REINF – EXTENSION FRT RAIL INR RT –
AX REINF – EXTENSION FRT RAIL INR LT –
AY REINF – EXTENSION FRT RAIL INR RT –
AY REINF – EXTENSION FRT RAIL INR LT –
AZ CROSSMEMBER – FRT FLOOR RR –
BA EXTENSION – SIDEMEMBER FRT FLOOR LT –
BA EXTENSION – SIDEMEMBER FRT FLOOR RT –
BB REINF – FRT FLOOR RR –
BB REINF – FRT FLOOR RR –
BC SILL – RR FLOOR SIDEMEMBER RT –
BC SILL – RR FLOOR SIDEMEMBER LT –
BD EXTENSION – RR FLOOR –
BE PLATE – SIDE SILL RT –
BE PLATE – SIDE SILL LT –
BF PANEL – RR WHEELHOUSE INR FRT RT –
BF PANEL – RR WHEELHOUSE INR FRT LT –
BG SIDEMEMBER – RR FLOOR UPR RT –
BG SIDEMEMBER – RR FLOOR UPR LT –
BH PANEL – SPRING RR –
BH PANEL – SPRING RR –
BJ REINF – SUSPENSION RR RT –
BJ REINF – SUSPENSION RR LT –
BK SUPPORT – RR BUMPER RT –
BK SUPPORT – RR BUMPER LT –
BL PANEL – RR CLOSURE INR –
BM PAN – RR FLOOR PAN –
BN EXTENSION – RR FLOOR SIDEMEMBER RT –
BN EXTENSION – RR FLOOR SIDEMEMBER LT –
BP REINF – RR WHEELHOUSE FRT RT –
BP REINF – RR WHEELHOUSE FRT LT –
BR PANEL – COWL TOP UPPER –
BS PANEL – COWL TOP INNER –
BT PANEL – DASH
BU PANEL – RR CLOSURE INR –

Back to Index

PARTS IDENTIFICATION LEGEND, OVERVIEW 24

AA PANEL – COWL SIDE RT –
AA PANEL – COWL SIDE LT –
AB BEAM – LOAD PATH INR UPR RT –
AB BEAM – LOAD PATH INR UPR LT –
AC PANEL – COWL TOP LOWER –
AD PANEL – COWL TOP UPPER –
AE REINF – SHOCK TOWER MOUNTING FRT RT –
AE REINF – SHOCK TOWER MOUNTING FRT LT –
AF BRACE – TORQUE BOX RT –
AF BRACE – TORQUE BOX LT –
AG SILL – FRT FLOOR PAN RT –
AG SILL – FRT FLOOR PAN LT –
AH PANEL – COWL TOP INNER –
AJ PANEL – DASH –
AK CROSSMEMBER – DASH –
AK CROSSMEMBER – DASH –
AL PAN – FRT FLOOR –
AM CROSSMEMBER – FRT FLOOR PAN FRT RT –
AM CROSSMEMBER – FRT FLOOR PAN FRT LT –
AN EXTENSION – RAIL FRT RT –
AN EXTENSION – RAIL FRT LT –
AP RAIL – TUNNEL FRT RT –
AP RAIL – TUNNEL FRT LT –
AR CROSSMEMBER – DASH –
AS REINF – TUNNEL –
AT REINF – TUNNEL –
AU PANEL – DASH LWR –
AV REINF – FRT SIDE RAIL BUMPER MOUNTING RT –
AV REINF – FRT SIDE RAIL BUMPER MOUNTING LT –
AW SIDEMEMBER – FRT FLOOR –
AX REINF – EXTENSION FRT RAIL INR RT –
AX REINF – EXTENSION FRT RAIL INR LT –
AY REINF – EXTENSION FRT RAIL INR RT –
AY REINF – EXTENSION FRT RAIL INR LT –
AZ CROSSMEMBER – FRT FLOOR RR –
BA EXTENSION – SIDEMEMBER FRT FLOOR LT –
BA EXTENSION – SIDEMEMBER FRT FLOOR RT –
BB REINF – FRT FLOOR RR –
BB REINF – FRT FLOOR RR –
BC SILL – RR FLOOR SIDEMEMBER RT –
BC SILL – RR FLOOR SIDEMEMBER LT –
BD EXTENSION – RR FLOOR –
BE PLATE – SIDE SILL RT –
BE PLATE – SIDE SILL LT –
BF PANEL – RR WHEELHOUSE INR FRT RT –
BF PANEL – RR WHEELHOUSE INR FRT LT –
BG SIDEMEMBER – RR FLOOR UPR RT –
BG SIDEMEMBER – RR FLOOR UPR LT –
BH PANEL – SPRING RR –
BH PANEL – SPRING RR –
BJ REINF – SUSPENSION RR RT –
BJ REINF – SUSPENSION RR LT –
BK SUPPORT – RR BUMPER RT –
BK SUPPORT – RR BUMPER LT –
BL PANEL – RR CLOSURE INR –
BM PAN – RR FLOOR PAN –
BN EXTENSION – RR FLOOR SIDEMEMBER RT –
BN EXTENSION – RR FLOOR SIDEMEMBER LT –
BP REINF – RR WHEELHOUSE FRT RT –
BP REINF – RR WHEELHOUSE FRT LT –
BR PANEL – COWL TOP UPPER –
BS PANEL – COWL TOP INNER –
BT PANEL – DASH
BU PANEL – RR CLOSURE INR –

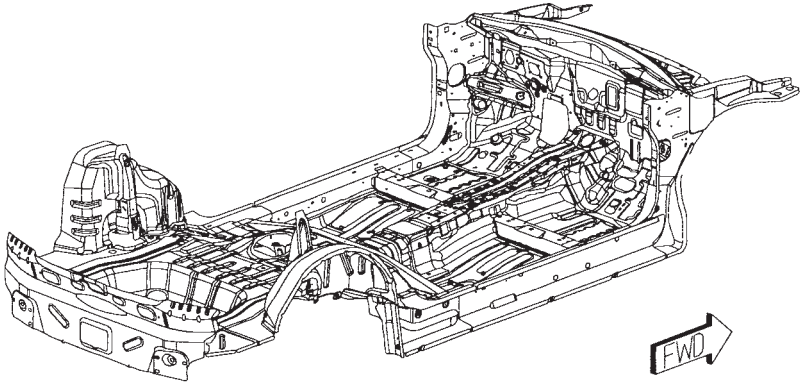

Back to Index

WELD LAYOUT LOCATION GUIDE

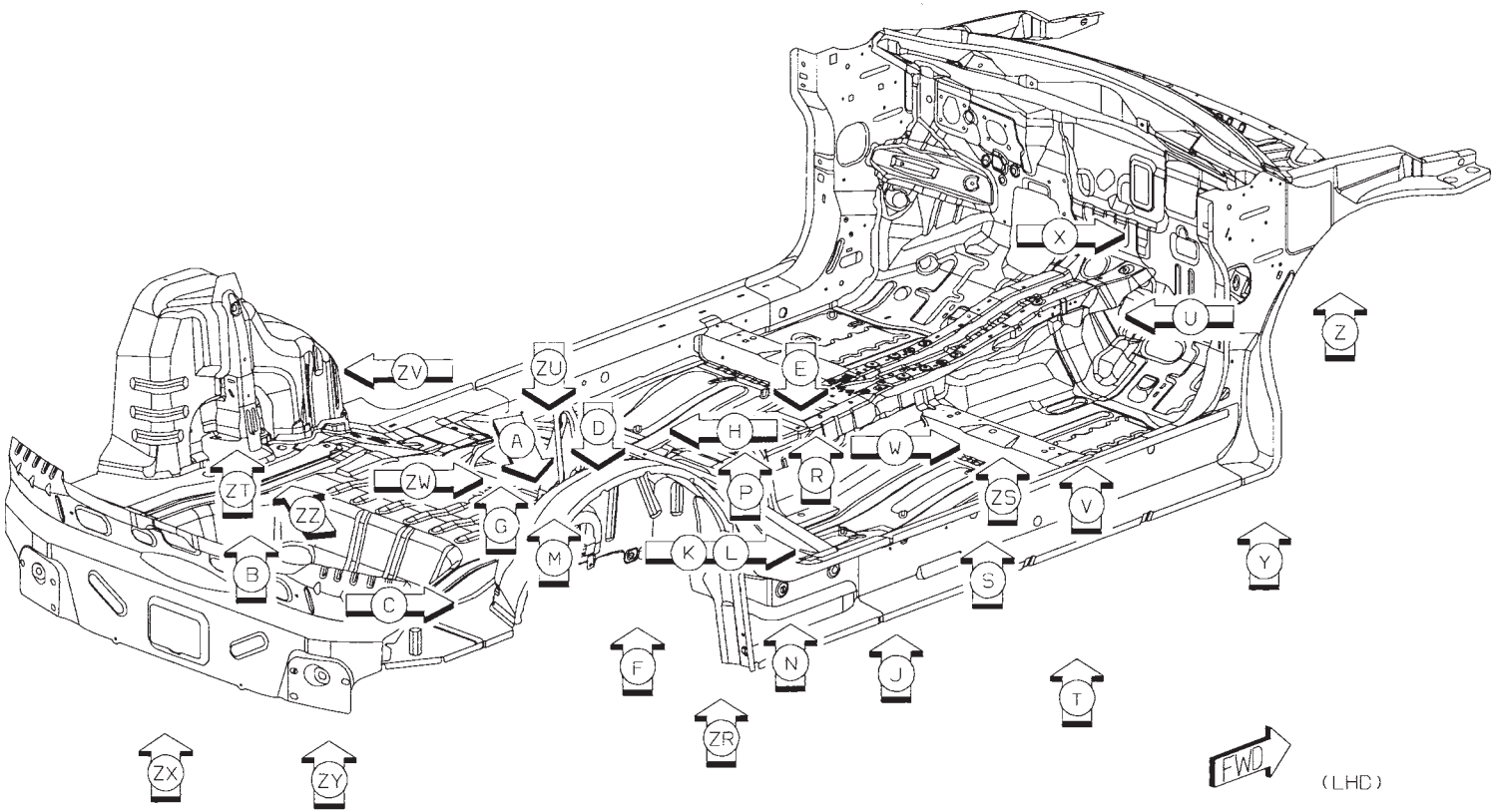

Back to Index

WELD LAYOUT LOCATION GUIDE

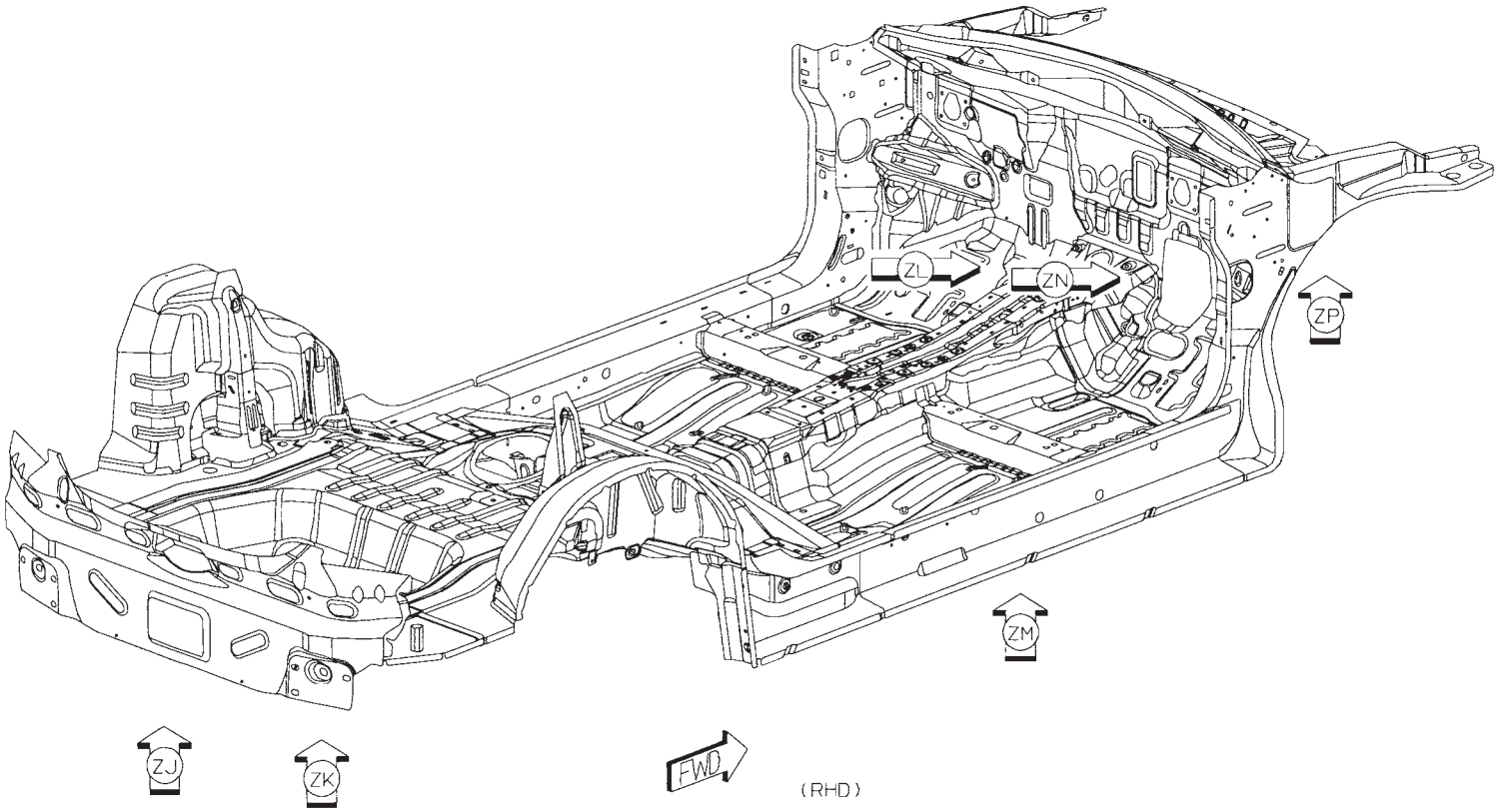

Back to Index

01 AD TO AB TO AA 2/SD S/WELDS (ORD)
02 AC TO AB TO AA 4/SD S/WELDS (ORD)
03 AE TO AB TO AA 2/SD S/WELDS (ORD)
04 AB TO AA 3/SD S/WELDS (ORD)
05 AF TO AA 8/SD S/WELDS (ORD)
06 AF TO AG TO AA 2/SD S/WELDS (ORD)

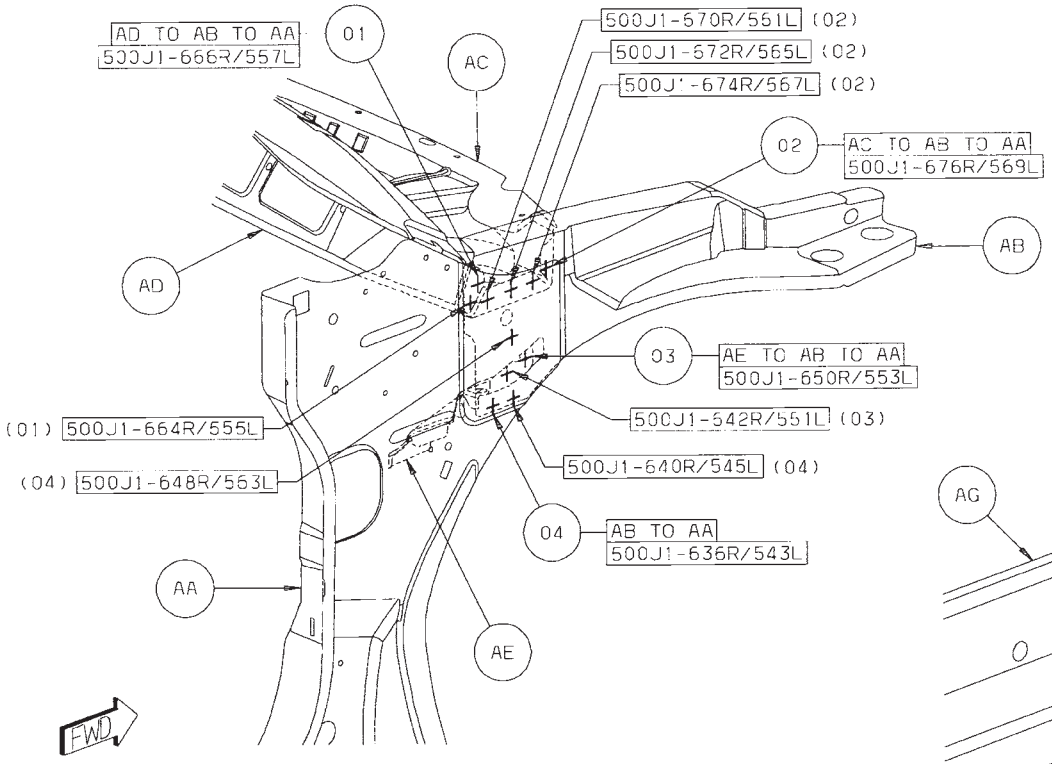

VIEW Z

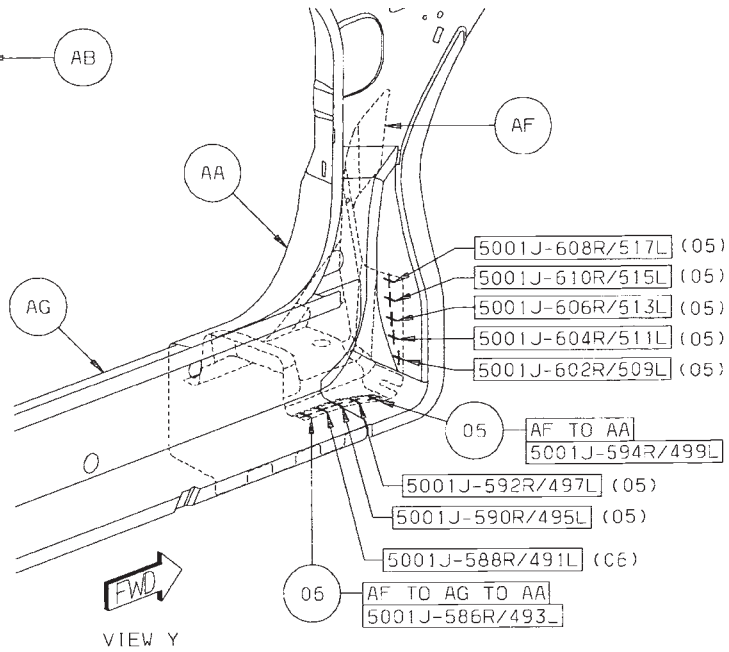

VIEW Y

Back to Index

07 AK TO AJ TO AA 2/SD S/WELDS (ORD)
08 AB TO AJ TO AA 3/SD S/WELDS (ORD)
09 AB TO AH TO AA 1/SD S/WELD (ORD)
10 AH TO AA 6/SD S/WELDS (ORD)
11 AK TO AA 3/SD S/WELDS (ORD)
12 AJ TO AA 6/SD S/WELDS (ORD)
13 AG TO AJ TO AA 3/SD S/WELDS (ORD)

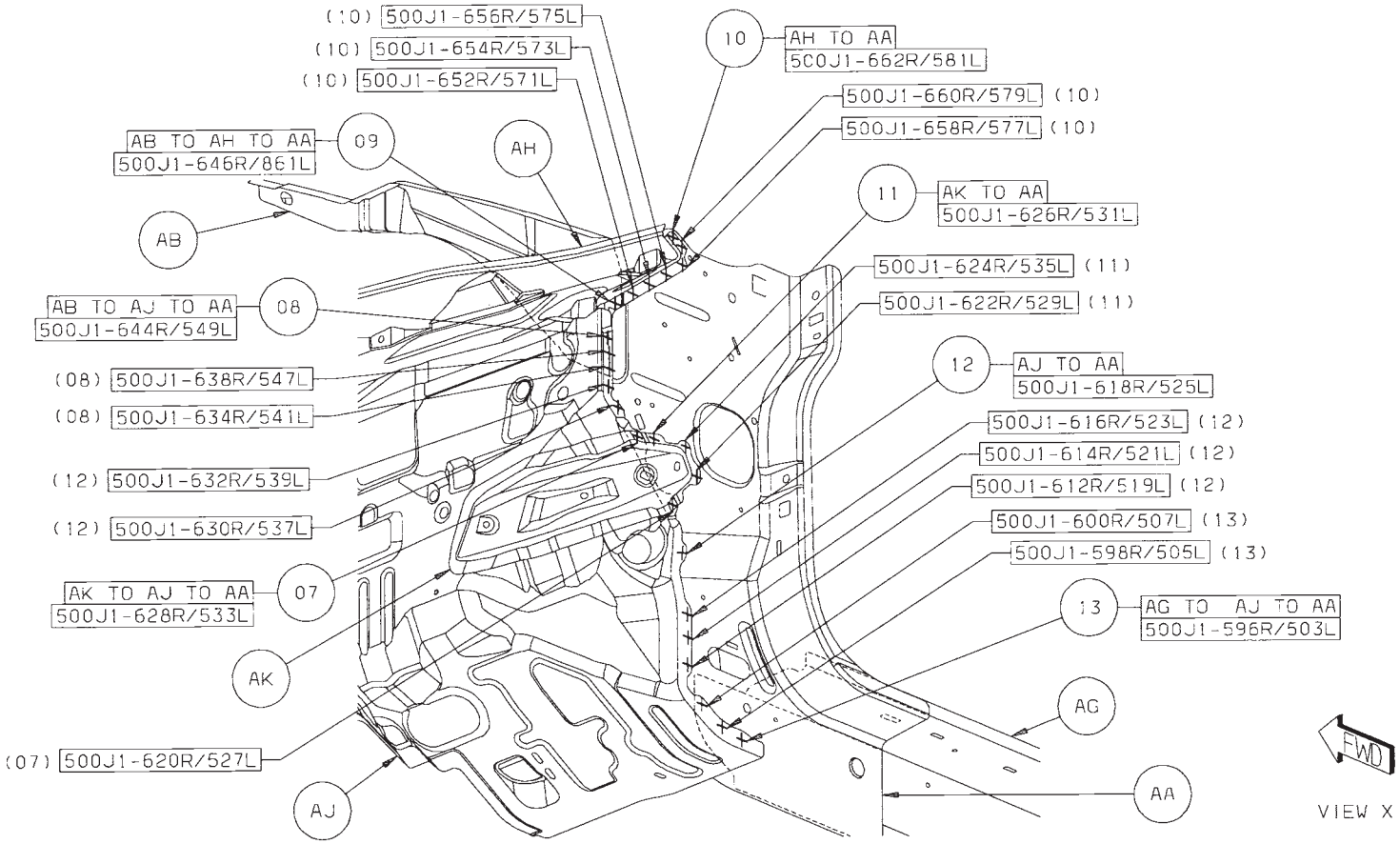

Back to Index

14 AA TO AG TO AL 5/SD S/WELDS (ORD)
15 AF TO AJ TO AL 3/SD S/WELDS (ORD)
16 AJ TO AL 1 S/WELD (ORD)
17 AM TO AG 6/SD S/WELDS (ORD)
18 AG TO AL 15/SD S/WELDS (ORD)

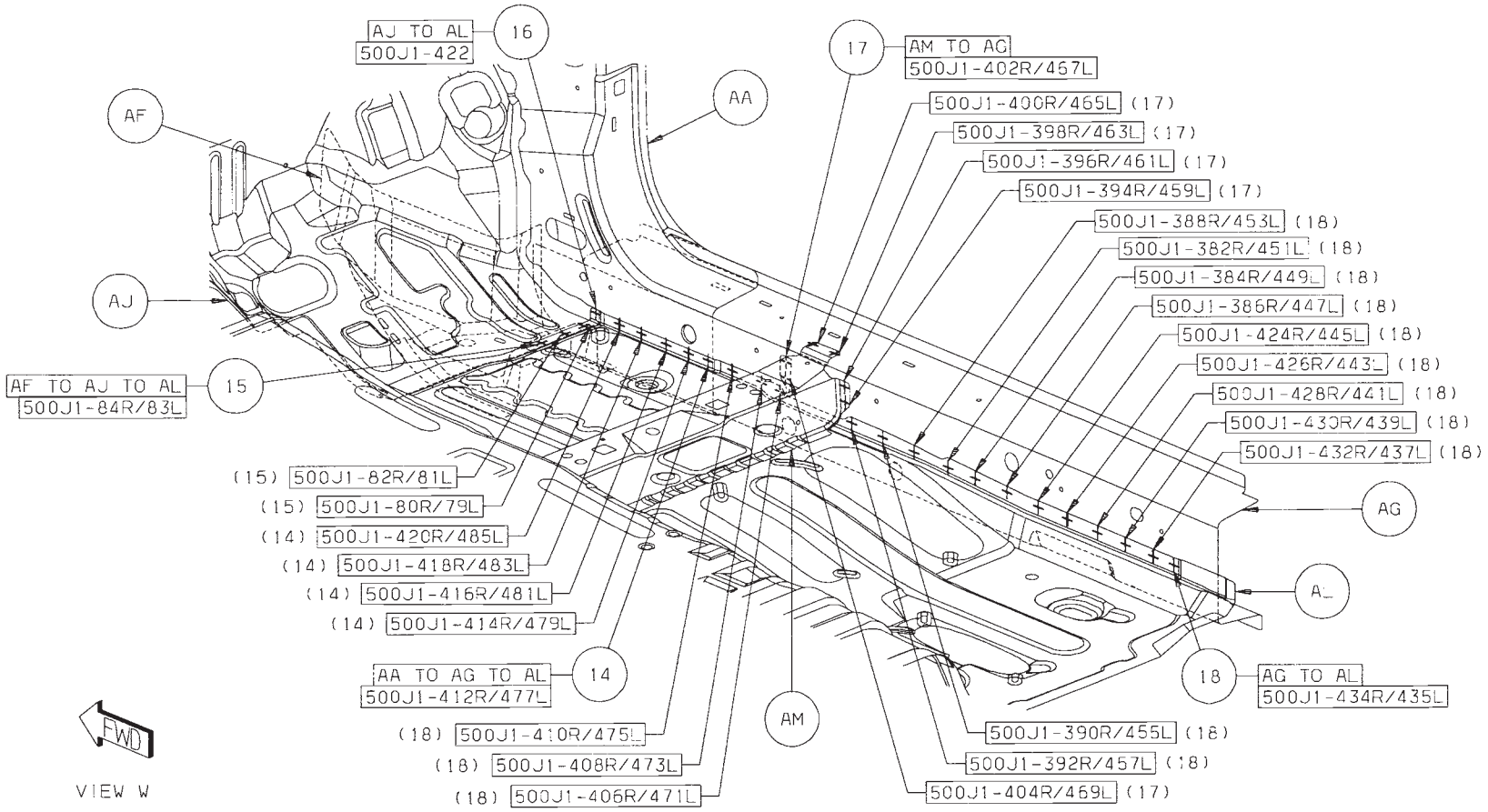

Back to Index

19 AM TO AP 4R S/WELDS (ORD)
20 AN TO AP TO AL 6R S/WELDS (ORD)
21 AR TO AU TO AL 3 S/WELDS (ORD)
22 AU TO AT TO AL 1 S/WELD (ORD)
23 AR TO AU TO AT 2 S/WELDS (ORD)
24 AS TO AT TO AJ 2 S/WELDS (ORD)
25 AN TO AL TO AJ 1R S/WELD (ORD)
26 AV TO AL TO AJ 2R S/WELDS (ORD)
27 AL TO AJ 3 S/WELDS (ORD)

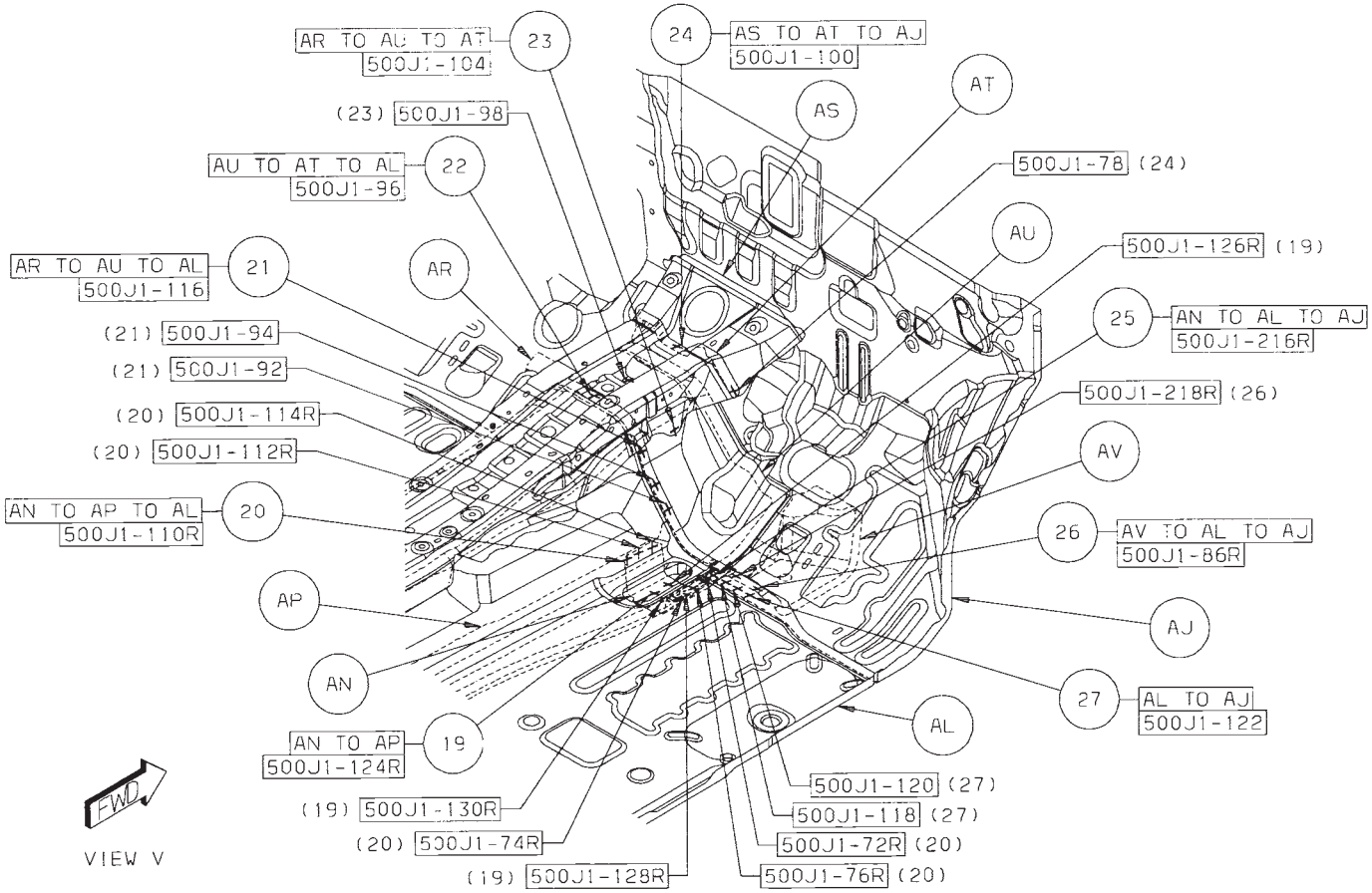

Back to Index

28 AV TO AL TO AJ 3 S/WELDS (ORD)
29 AL TO AJ 1 S/WELD (ORD)
30 AS TO AT TO AJ 1 S/WELD (ORD)
31 AS TO AT 2 MIG BRAZE (ORD)
32 AR TO AU TO AT 1 S/WELD (ORD)
33 AR TO AU TO AL 2 S/WELDS (ORD)
34 AN TO AP TO AL 6L S/WELDS (ORD)
35 AN TO AP 4L S/WELDS (ORD)

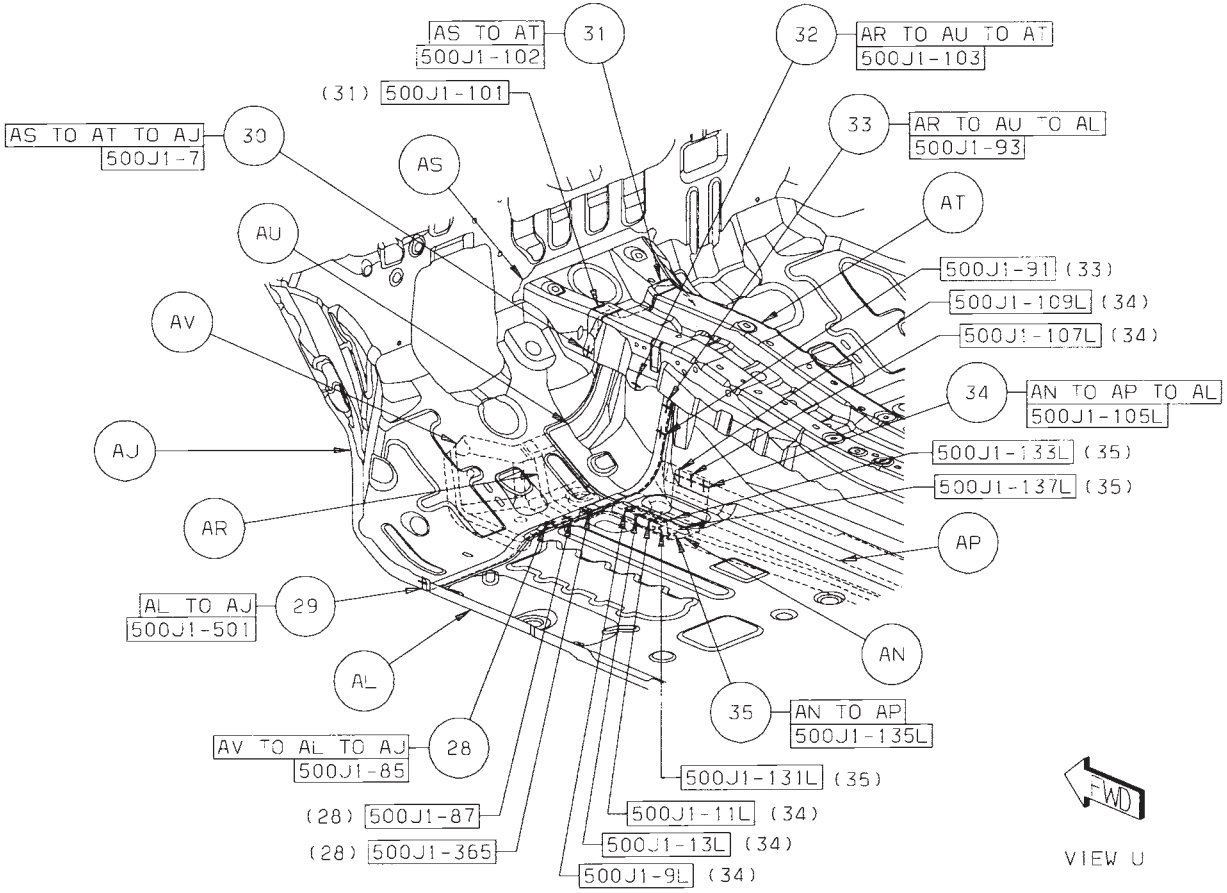

Back to Index

36 AW TO AL 12 S/WELDS (ORD)
37 AW TO AY TO AL 4 S/WELDS (ORD)
38 AY TO AM TO AL 4 S/WELDS (ORD)
39 AX TO AY TO AL 6 S/WELDS (ORD)
40 AY TO AL 10 S/WELDS (ORD)
41 AW TO AY 8 S/WELDS (ORD)

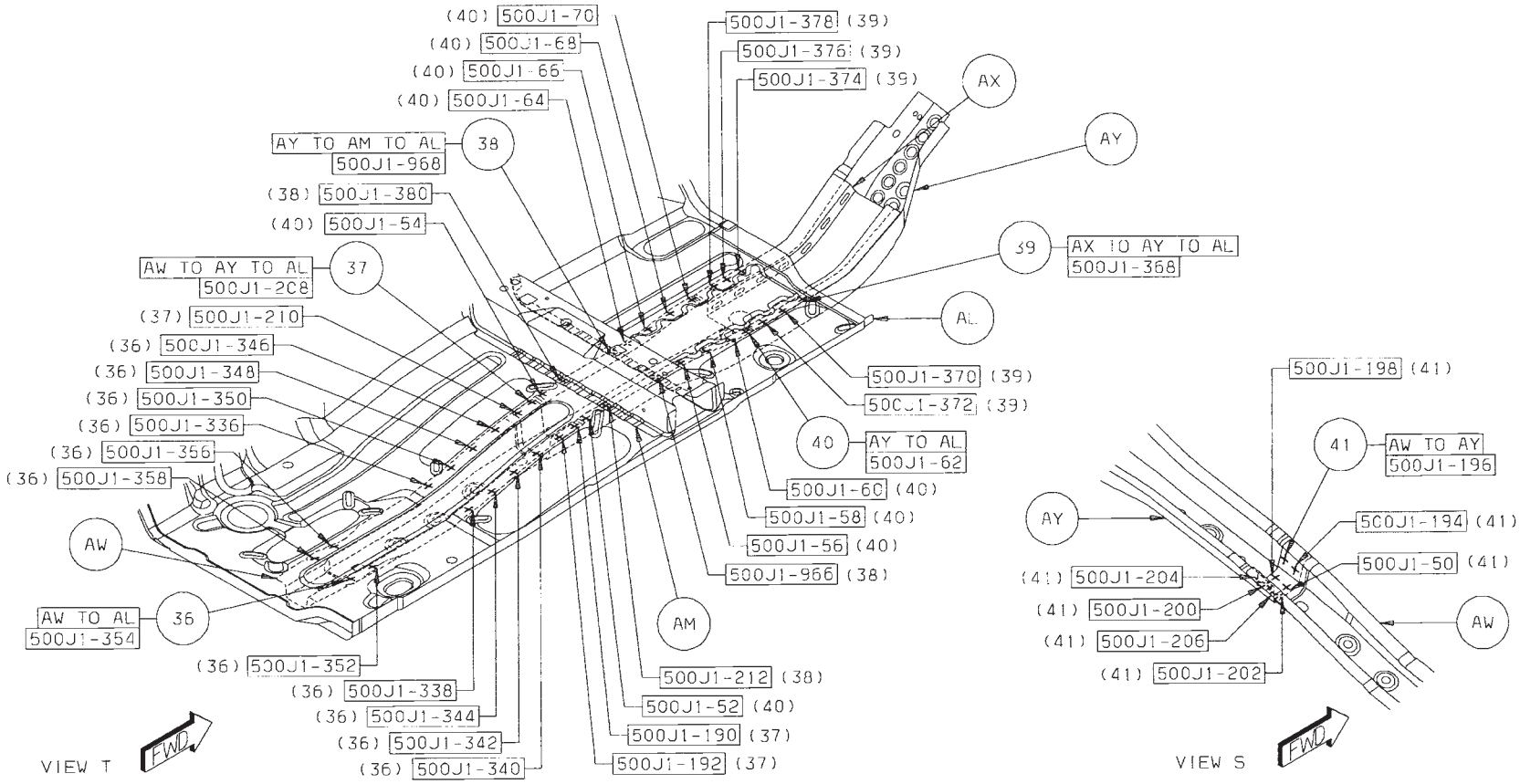

Back to Index

42 AW TO AL 12 S/WELDS (ORD)
43 AY TO AM TO AL 4 S/WELDS (ORD)
44 AX TO AY TO AL 6 S/WELDS (ORD)
45 AY TO AL 10 S/WELDS (ORD)
46 AW TO AY TO AM 4 S/WELDS (ORD)
47 AW TO AY 8 S/WELDS (ORD)

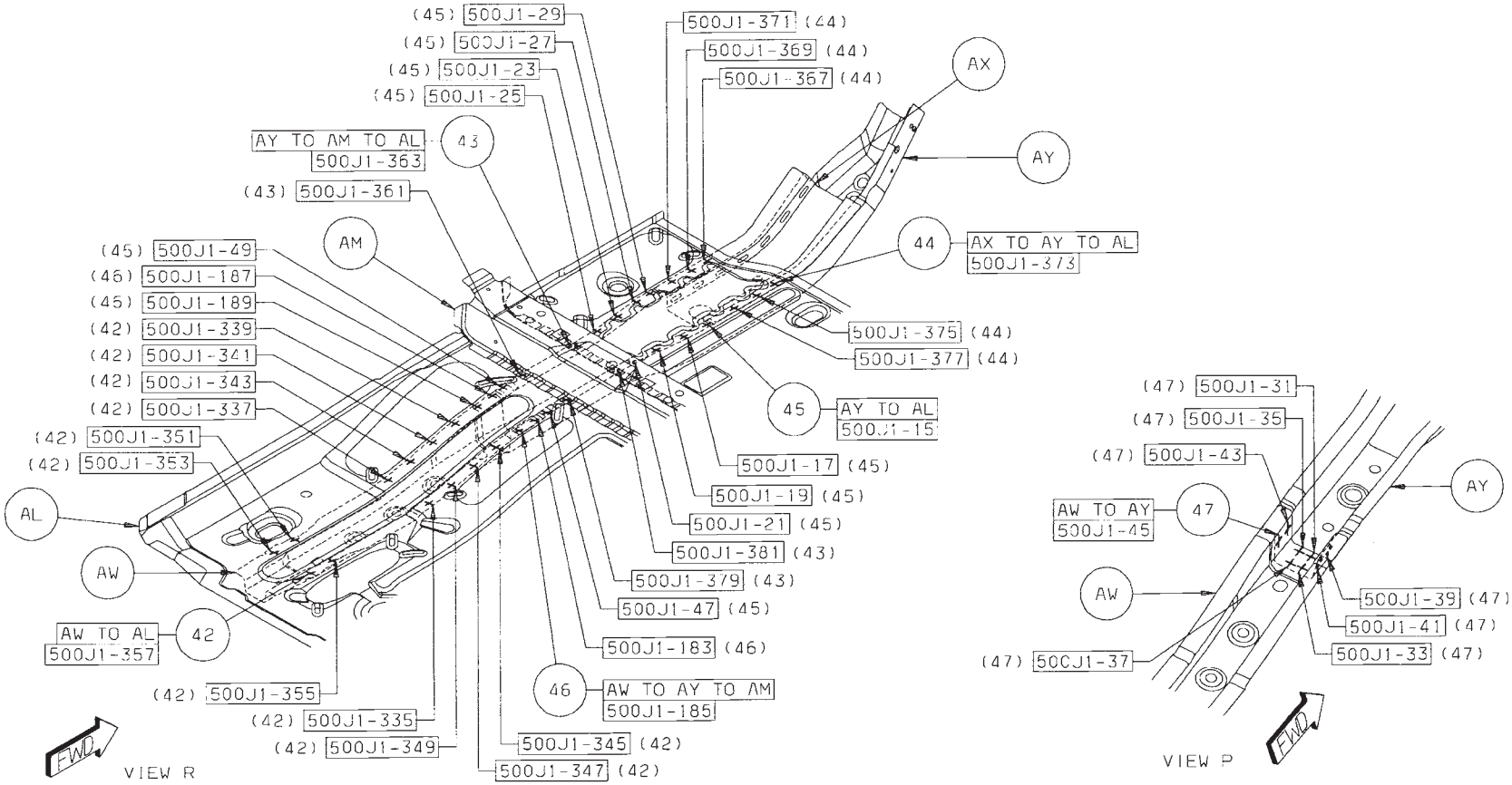

Back to Index

48 AZ TO AT TO AL 4 S/WELDS (CRT)
49 AP TO AZ TO AL 4R S/WELDS (CRT)
50 AZ TO AL 14 S/WELDS (CRT)
51 AZ TO AL 8 S/WELDS (ORD)
52 BA TO AW TO AL 4R/4L S/WELDS (ORD)
53 BA TO AL 2R/2L S/WELDS (ORD)

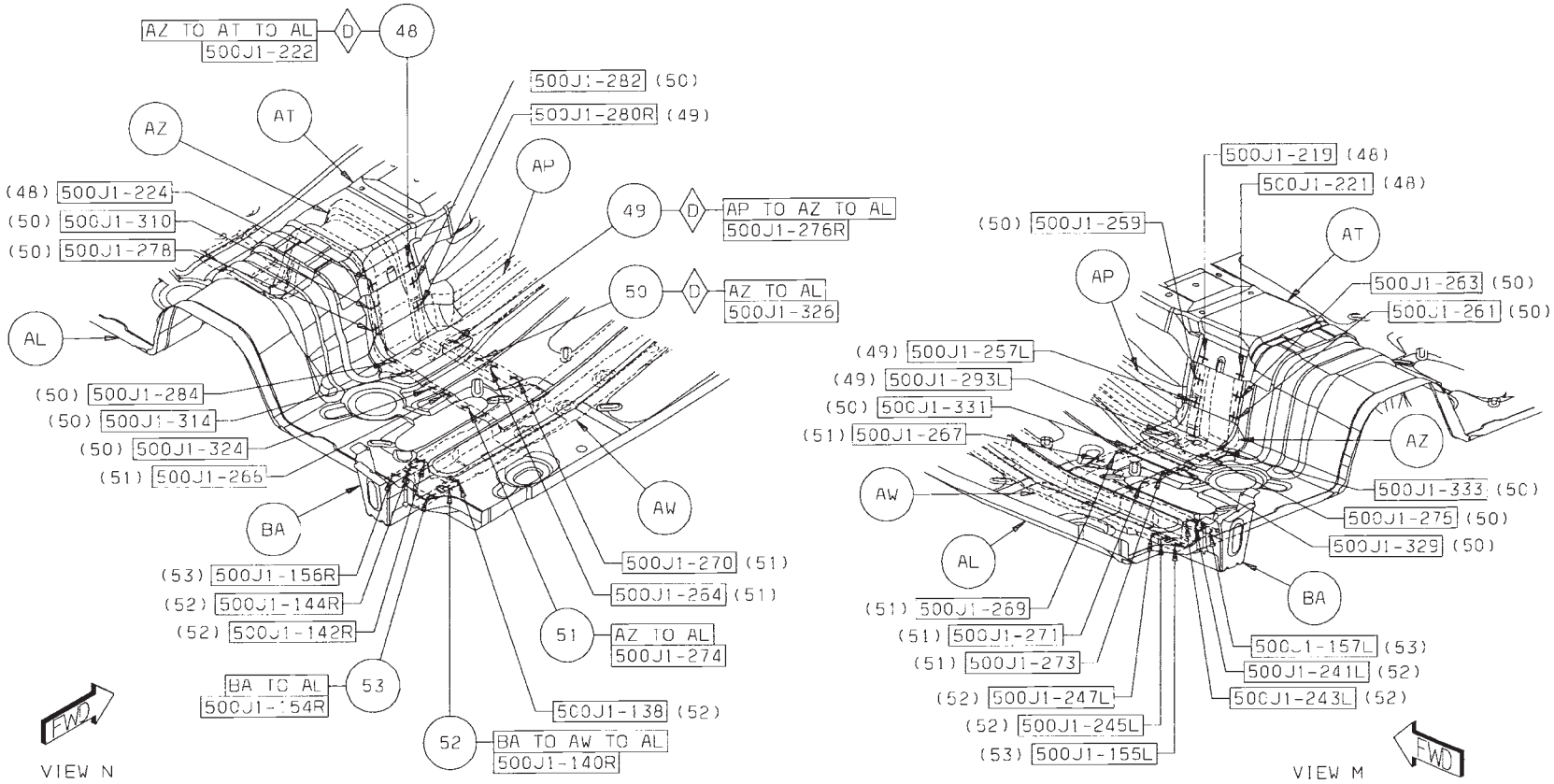

Back to Index

54 BB TO AL 6R S/WELDS (CRT)
55 BC TO AG 12R S/WELDS (ORD)
56 BC TO AL 1R S/WELD (ORD)
57 BC TO AG TO AL 2R S/WELDS (ORD)
58 BA TO AW 4/SD S/WELDS (ORD)
59 BB TO AG 5R S/WELDS (CRT)

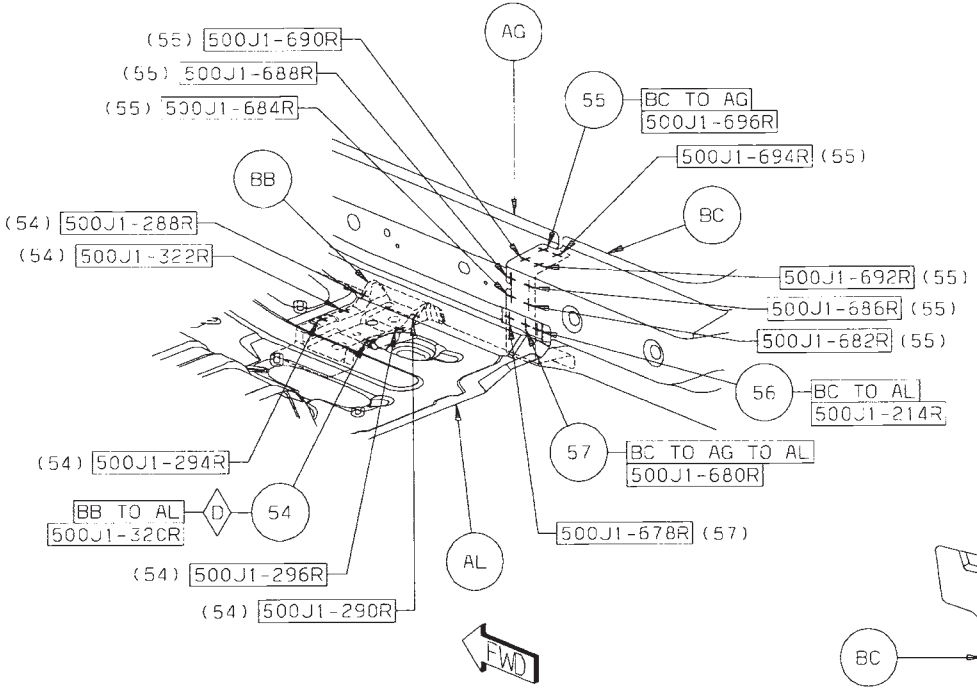

VIEW L
(RIGHT SIDE ONLY)

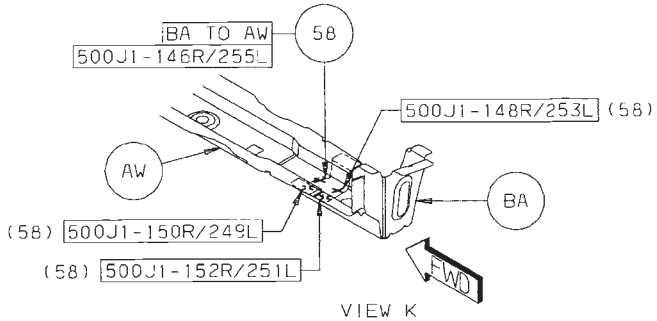

VIEW K

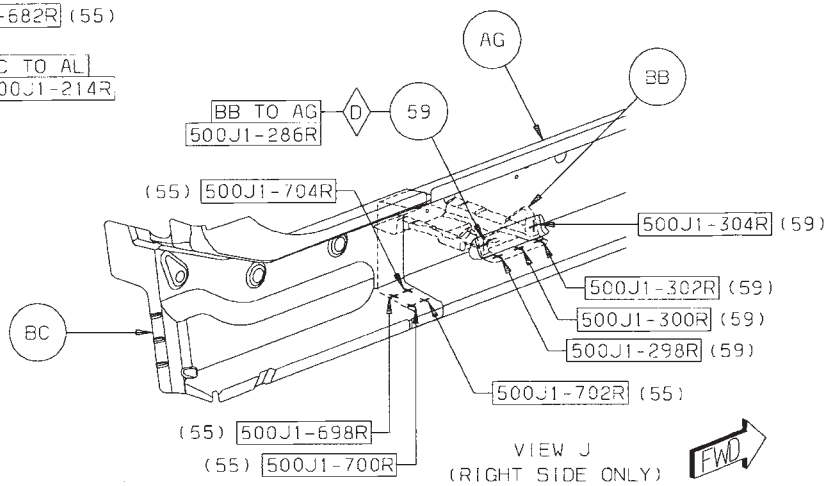

VIEW J
(RIGHT SIDE ONLY)

Back to Index

60 BC TO AG TO AL 2L S/WELDS (ORD)
61 BC TO AL 1L S/WELD (ORD)
62 BC TO AG 12L S/WELDS (ORD)
63 BB TO AL 6L S/WELDS (CRT)
64 BB TO AG 5L S/WELDS (CRT)

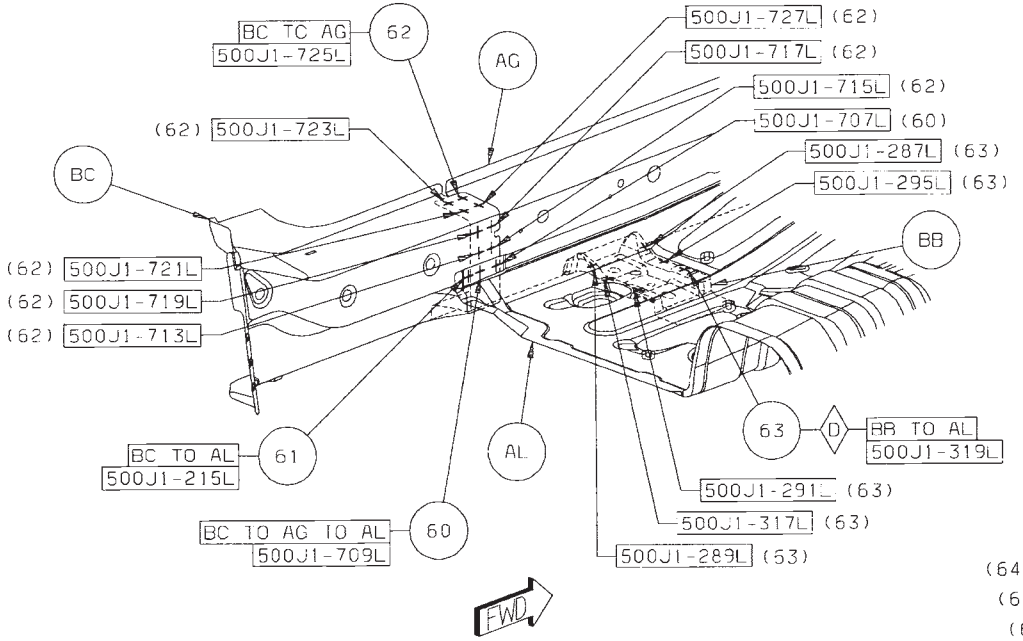

VIEW H
(LEFT SIDE ONLY)

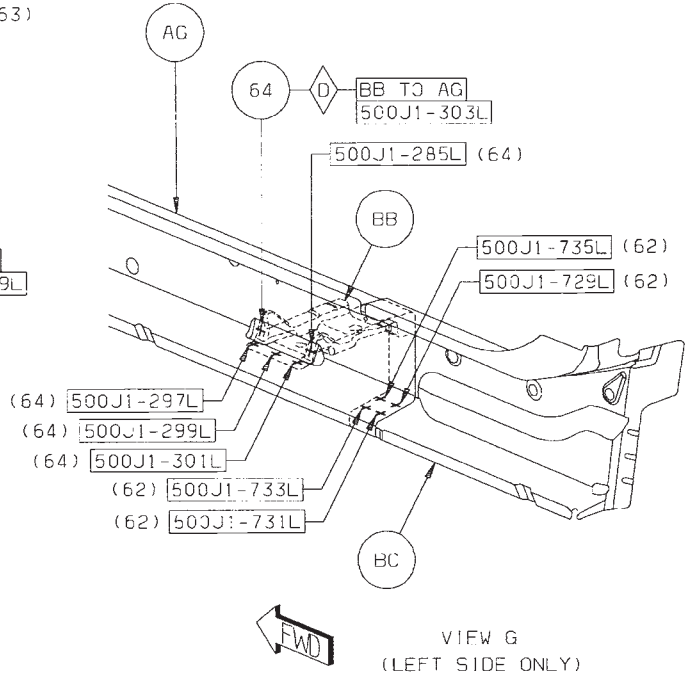

VIEW G
(LEFT SIDE ONLY)

Back to Index

65 BD TO AL 29 S/WELDS (ORD)
66 BC TO BD TO AL 1 S/WELD (ORD)
67 BA TO BD TO AL 2/SD S/WELDS (ORD)

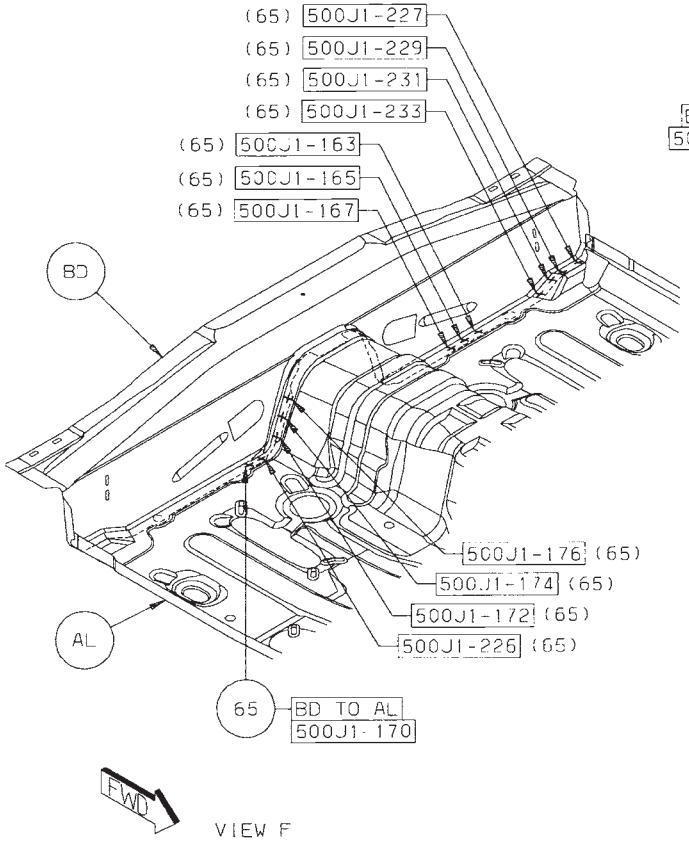

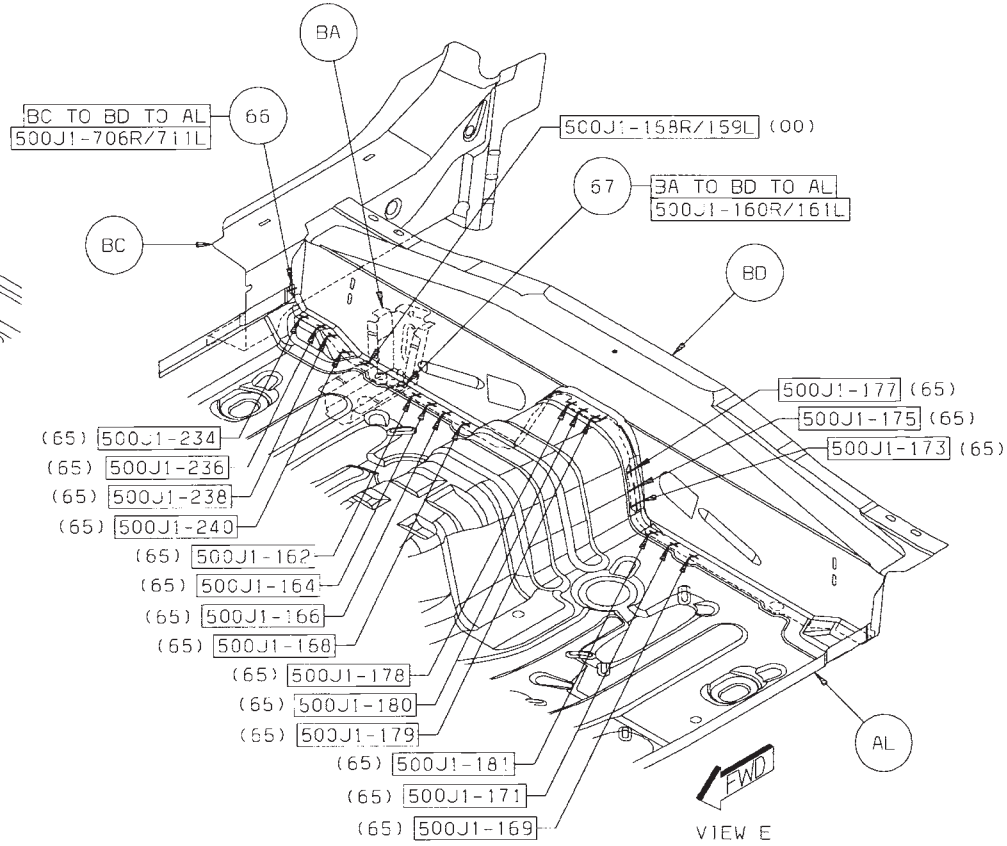

Back to Index

68 BE TO BF TO BG 1/SD S/WELD (ORD)
69 BE TO BC TO BF 2/SD S/WELDS (ORD)
70 BE TO BF 1/SD S/WELD (ORD)
71 BH TO BF TO BG 2R/2L S/WELDS (ORD)
72 BF TO BJ 15R/16L S/WELDS (ORD)

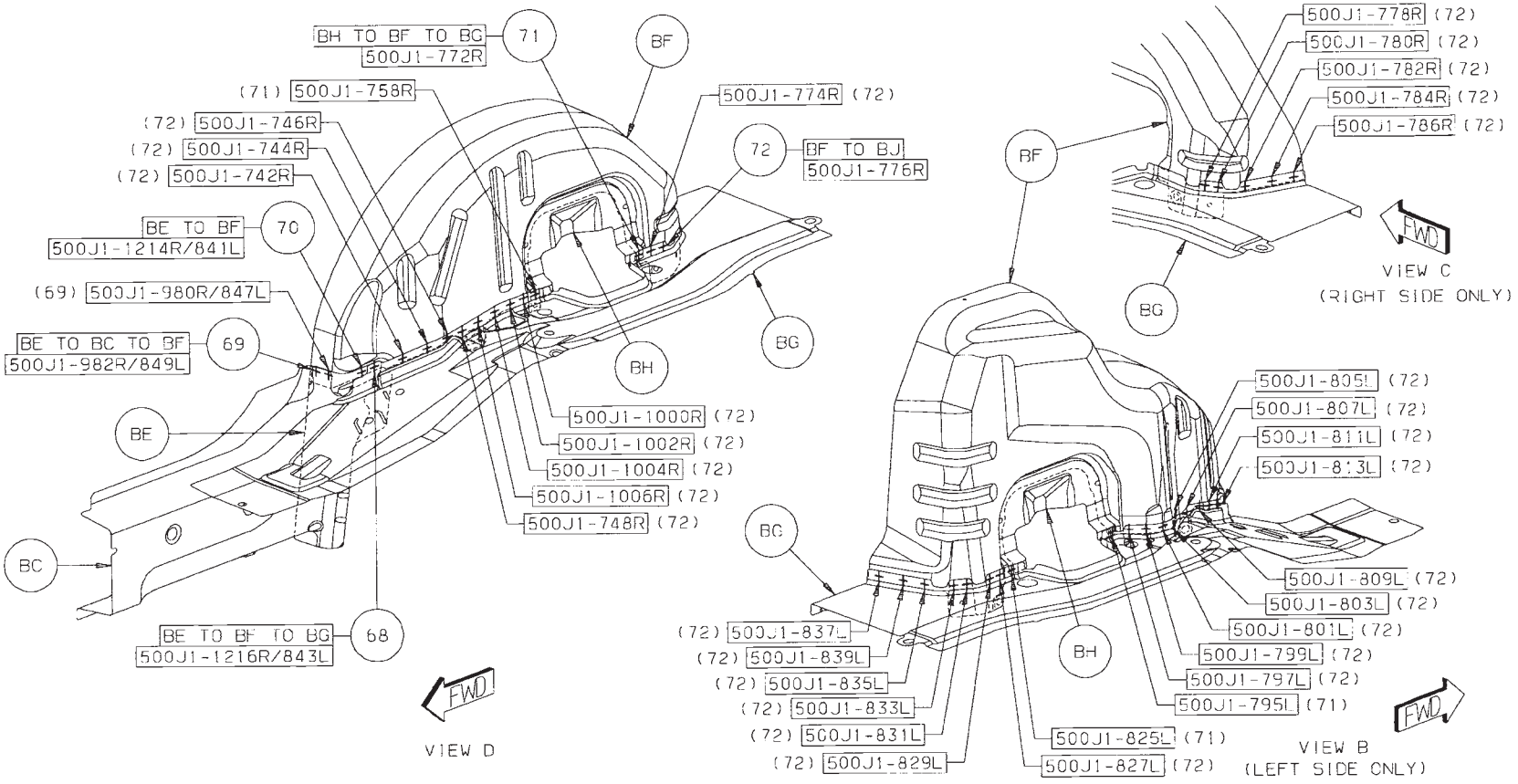

Back to Index

73 BH TO BF 8R/8L S/WELDS (ORD)
74 BJ TO BH TO BF 4R/4L S/WELDS (ORD)

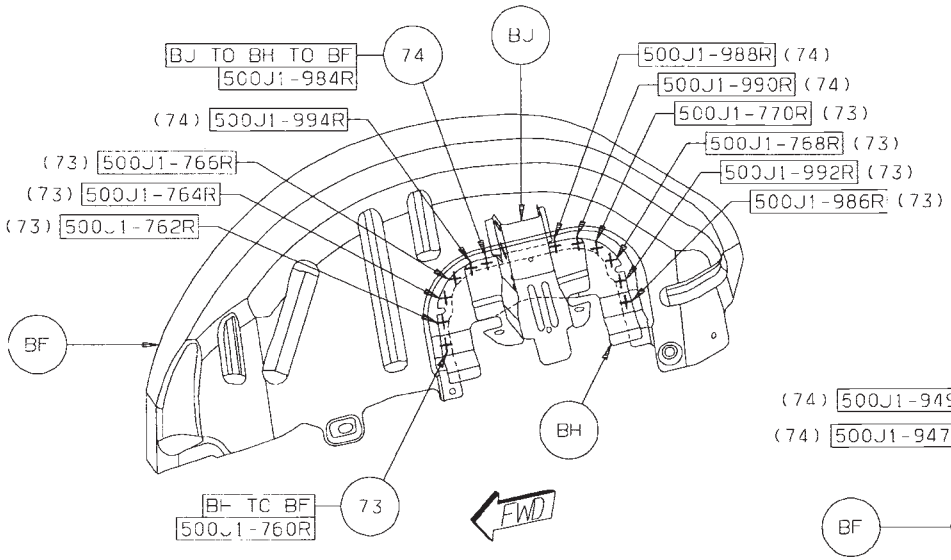

VIEW A
(RIGHT SIDE ONLY)

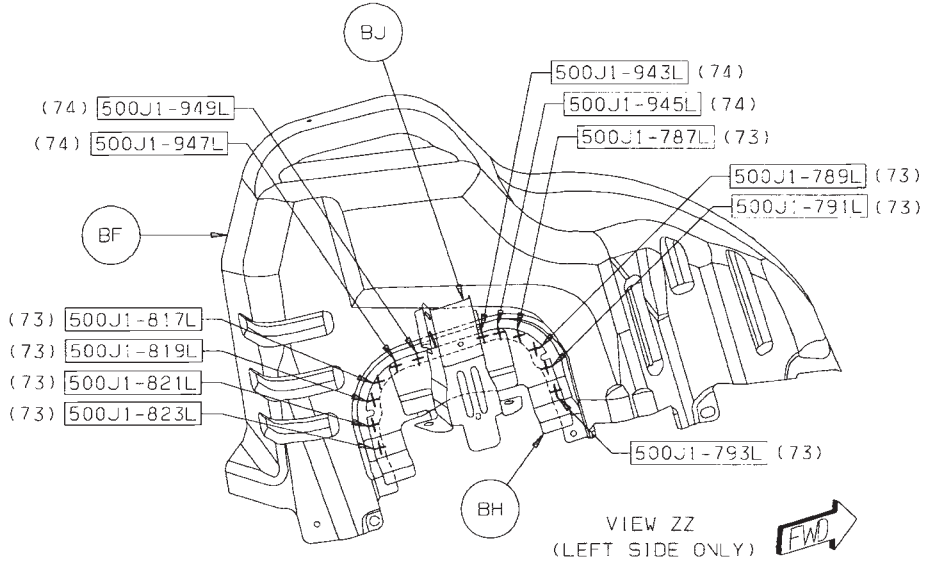

VIEW ZZ
(LEFT SIDE ONLY)

Back to Index

75 BK TO BL 3/SD S/WELDS (ORD)
76 BN TO BM TO BL 1/SD S/WELD (ORD)
77 BN TO BL 3/SD S/WELDS (ORD)
78 BM TO BL 23 S/WELDS (ORD)

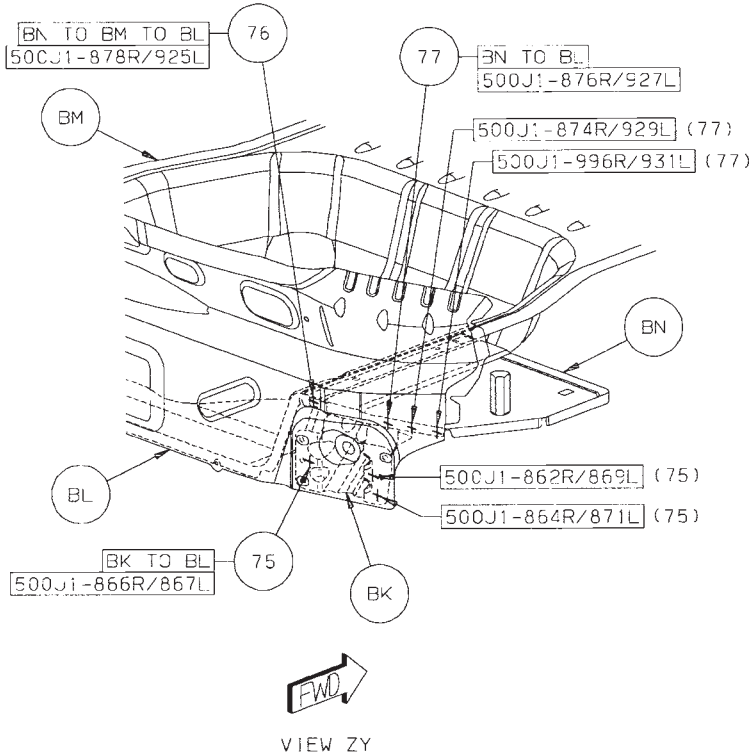

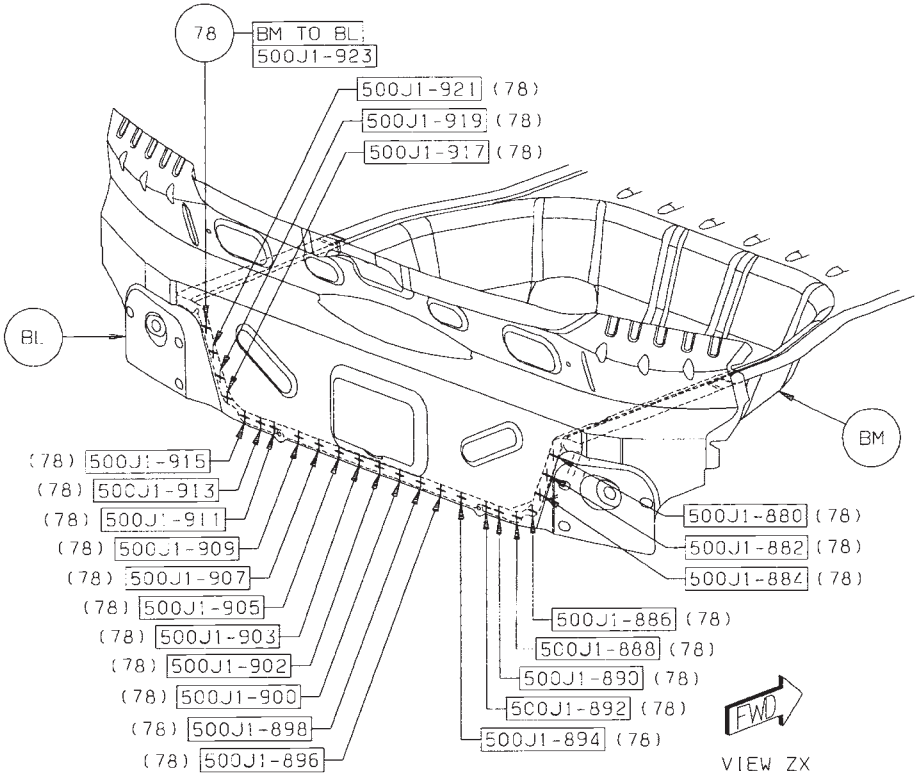

Back to Index

79 BJ TO BP 1R/1L STRUC ADH (ORD)
80 BJ TO BP 4R/4L FCAW (CRT)
81 AL TO AJ 2 MIG BRAZE (ORD)
82 AU TO AL 2 MIG BRAZE (ORD)

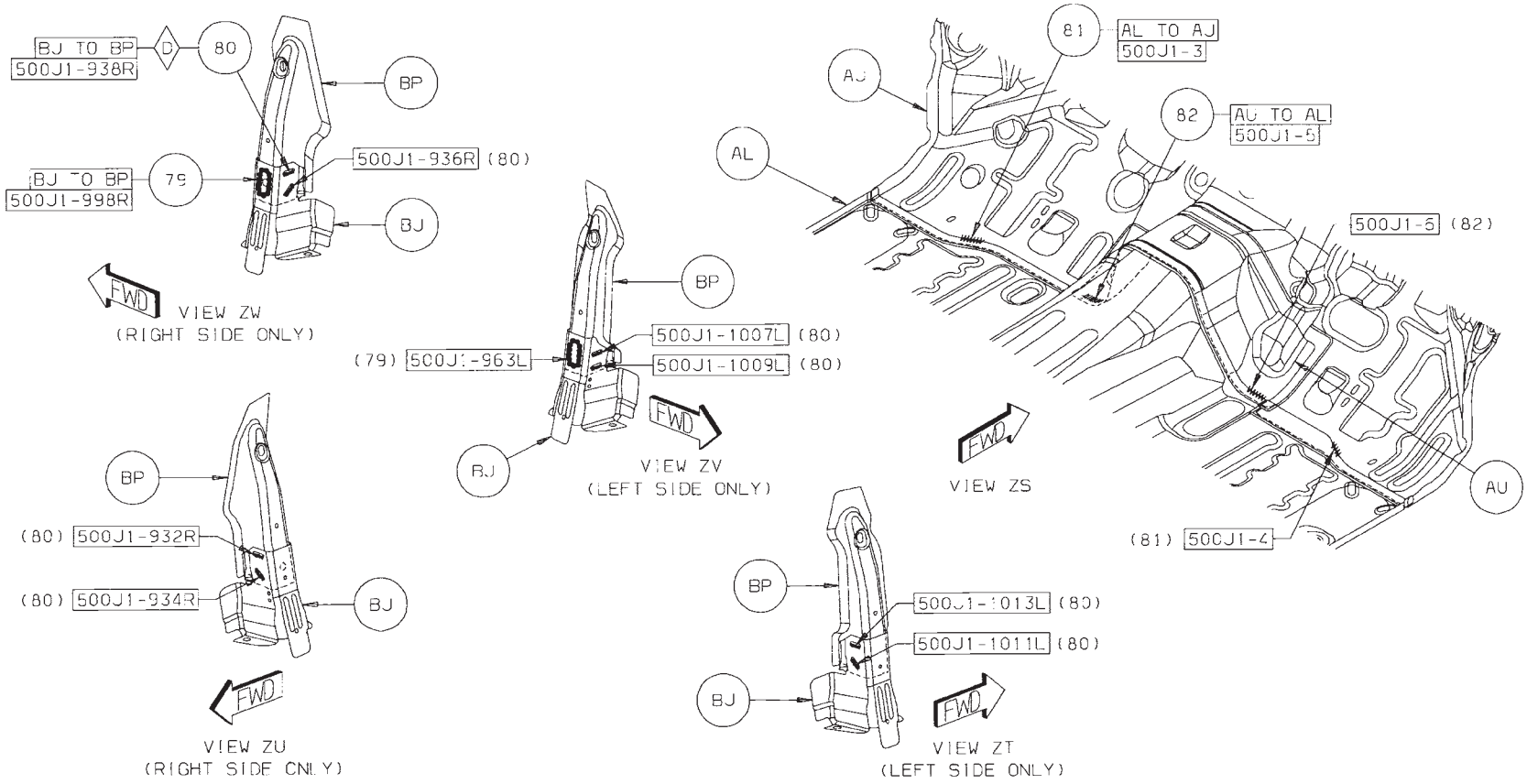

Back to Index

83 AZ TO AL 1 STRUC ADH (ORD)
84 AW TO AL 1 STRUC ADH (ORD)
85 AW TO AL 1 STRUC ADH (ORD)
86 AZ TO AL 1 STRUC ADH (ORD)
87 AW TO AL 1 STRUC ADH (ORD)
88 AW TO AL 1 STRUC ADH (ORD)

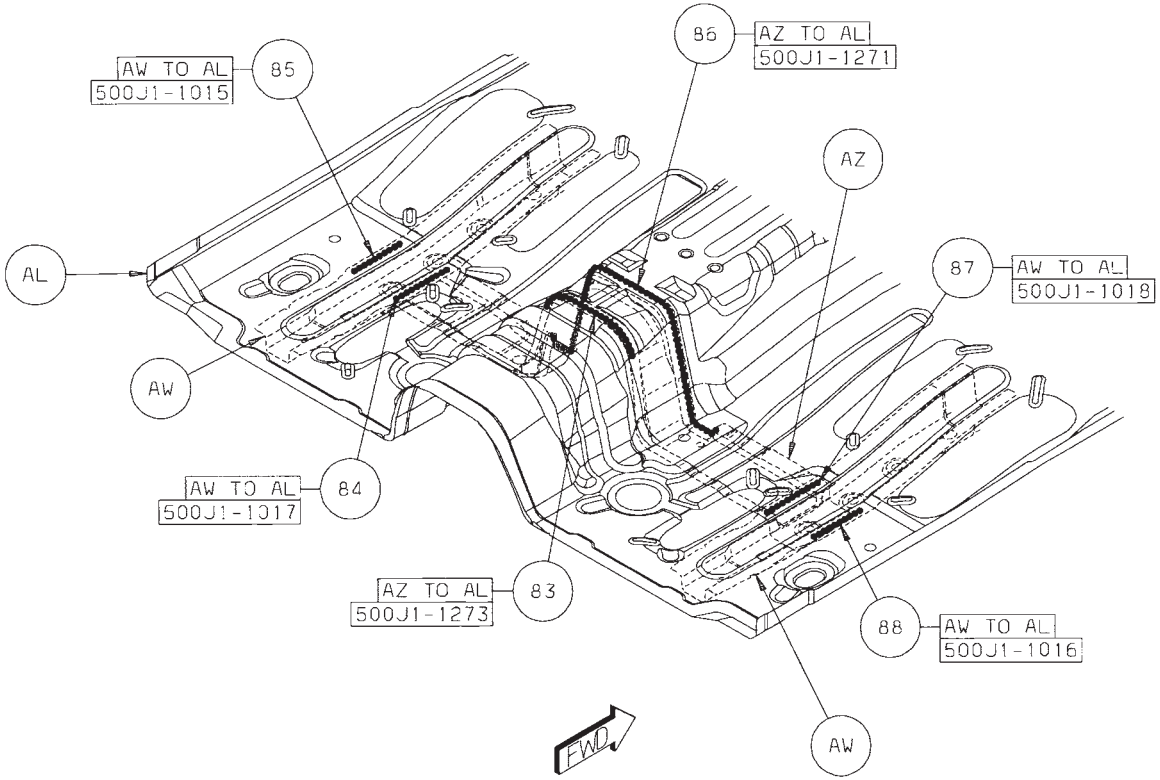

VIEW ZR

Back to Index

89 BR TO AB TO AA 2/SD S/WELDS (ORD)
90 BT TO AA 6 S/WELDS (ORD)
91 BT TO AB TO AA 3/SD S/WELDS (ORD)
92 BS TO AB TO AA 1/SD S/WELD (ORD)
93 BS TO AA 6/SD S/WELDS (ORD)
94 BT TO AK TO AA 2/SD S/WELDS (ORD)
95 BT TO AG TO AA 3/SD S/WELDS (ORD)

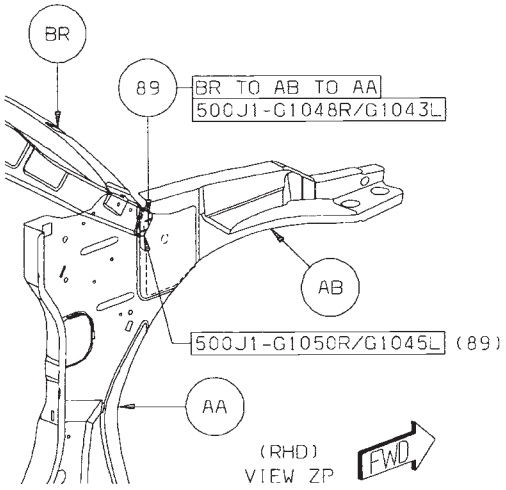

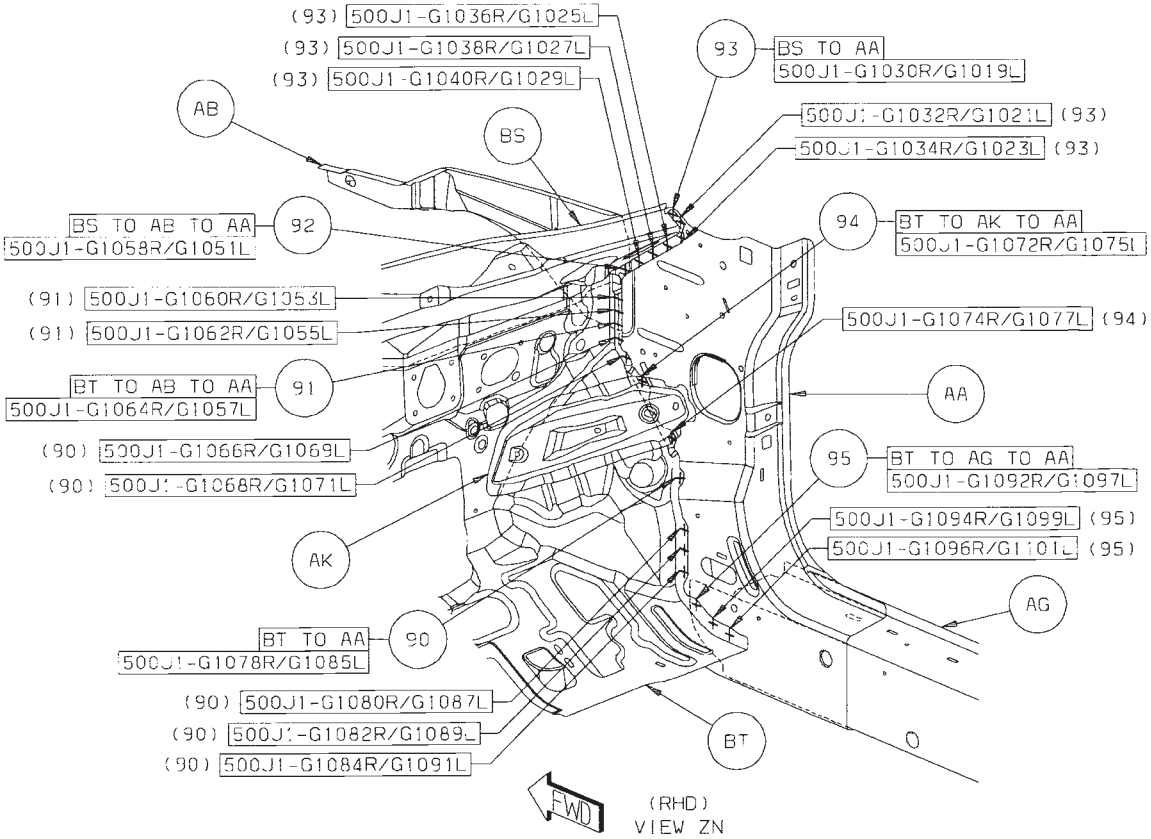

Back to Index

96 AN TO AL TO BT 1R S/WELD (ORD)
97 AS TO AT TO BT 3 S/WELDS (ORD)
98 AV TO AL TO BT 5R S/WELDS (ORD)
99 AL TO BT 5 S/WELDS (ORD)
100 AF TO AL TO BT 3R/3L S/WELDS (ORD)
101 AL TO BT 2 MIG BRAZE (ORD)

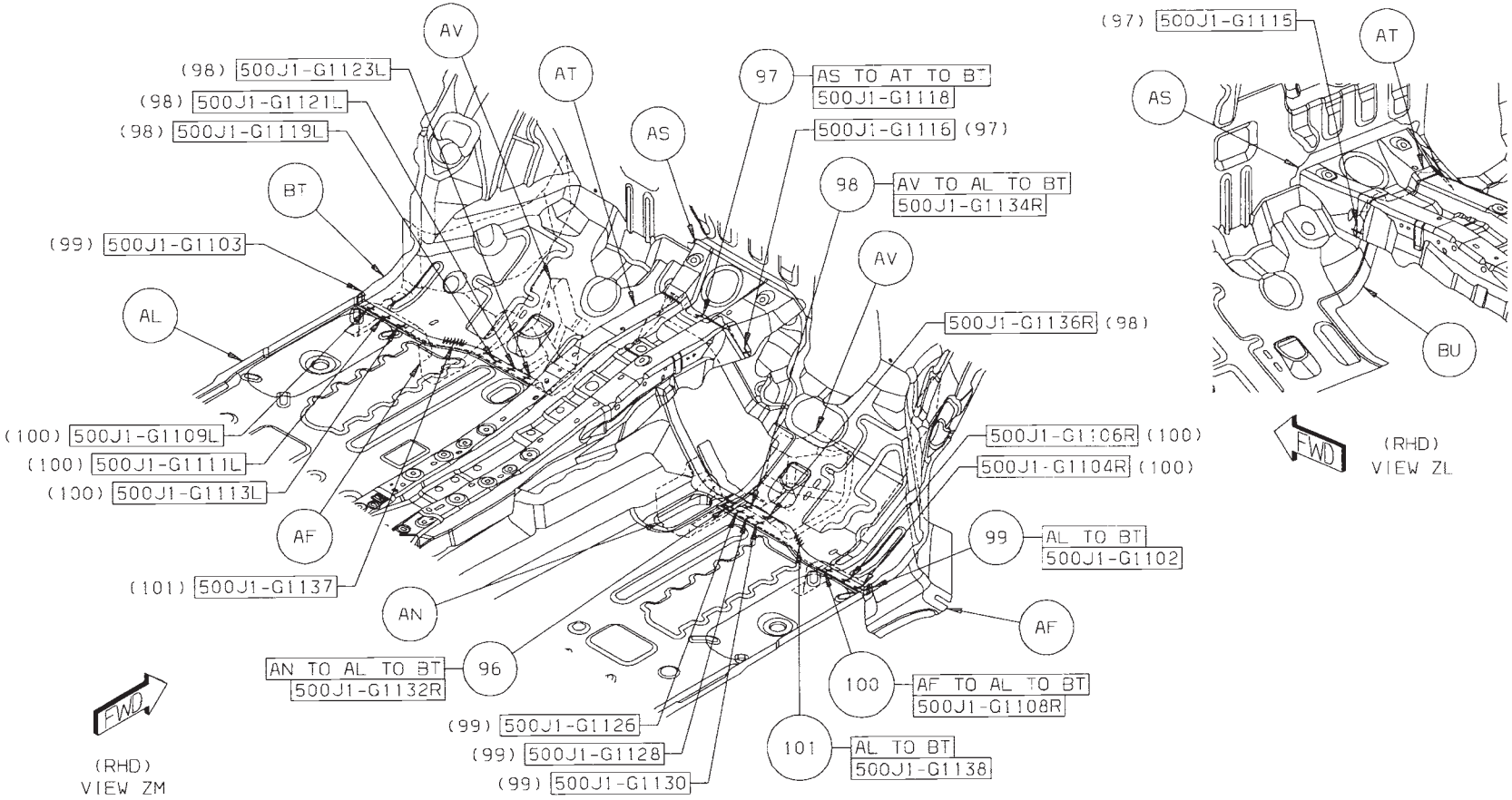

Back to Index

102 BK TO BU 3/SD S/WELDS (ORD)
103 BN TO BU 3/SD S/WELDS (ORD)
104 BM TO BU 25 S/WELDS (ORD)

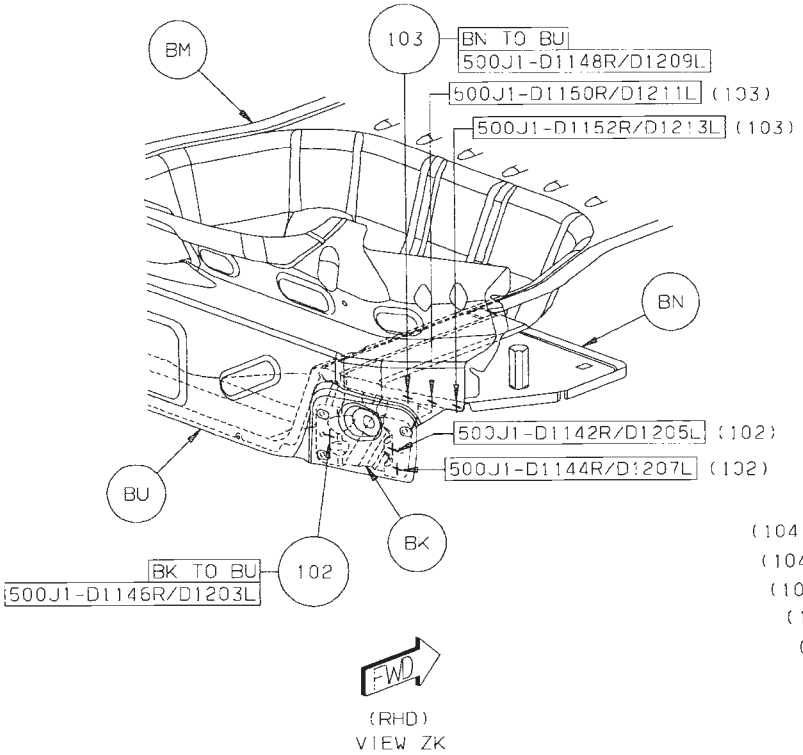

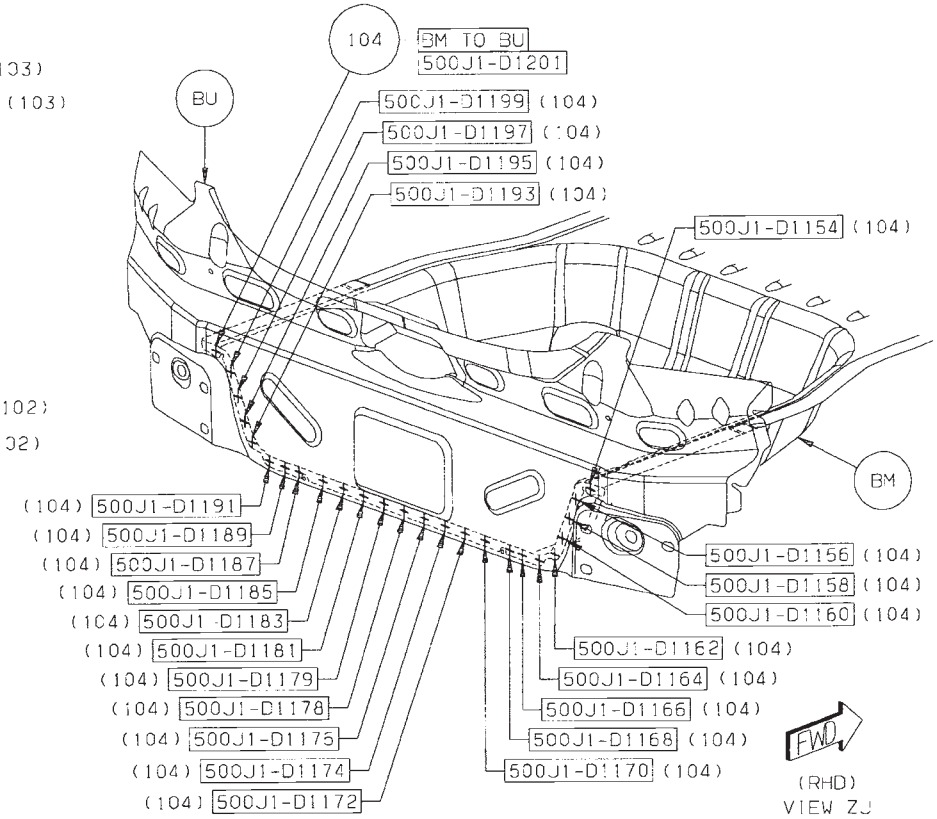

Back to Index

CHRYSLER SEBRING – DODGE AVENGER
VEHICLE IDENTIFICATION NUMBER DESCRIPTION

The Vehicle Identification Number (VIN) plate is located on the lower left A-pillar and is visible through the windshield. The VIN consists of 17 characters in a combination of letters and numbers that provide specific information about the vehicle. Refer to VIN Code Breakdown Chart for decoding information. To protect the consumer from theft and possible fraud the manufacturer is required to include a Check Digit at the ninth position of the vehicle identification number. The check digit is used by the manufacturer and government agencies to verify the authenticity of the vehicle and official documentation. The formula to use the check digit is not released to the general public.

VEHICLE IDENTIFICATION NUMBER (VIN)

1 - VEHICLE IDENTIFICATION NUMBER (VIN)

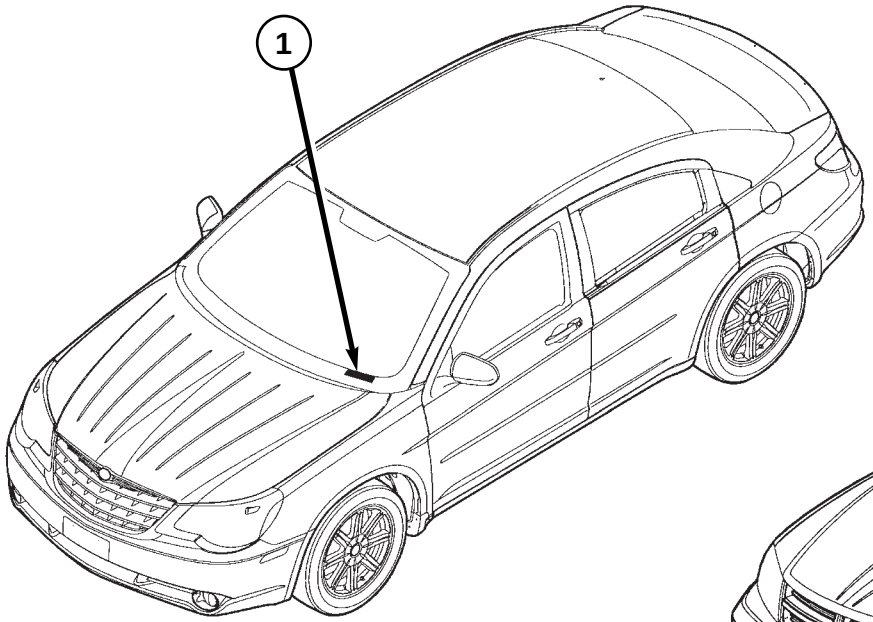

CHRYSLER SEBRING

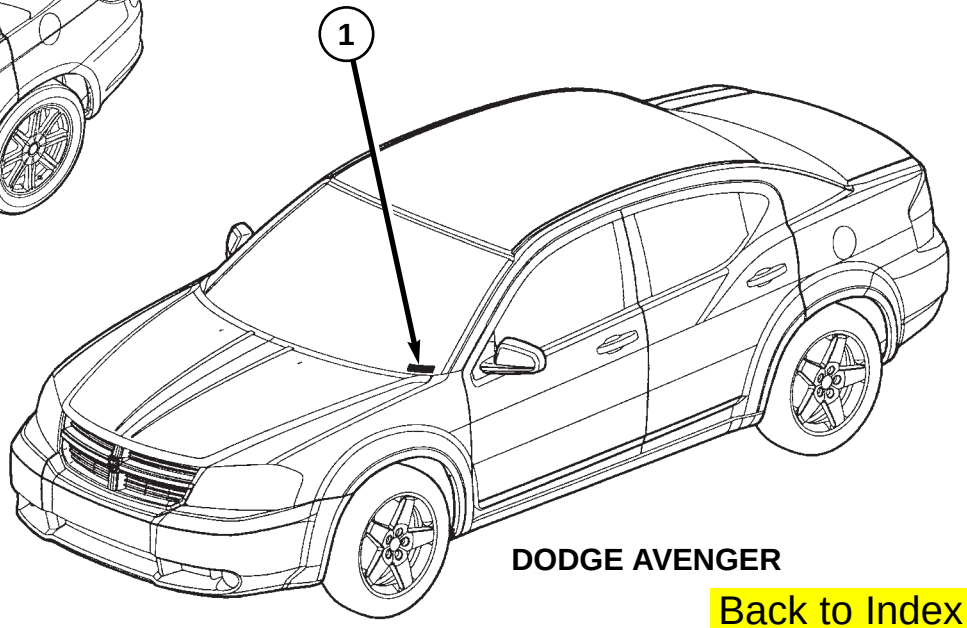

DODGE AVENGER

Back to Index

VEHICLE IDENTIFICATION NUMBER DECODING CHART

POSITION	INTERPRETATION	CODE/DESCRIPTION
1	Country of Origin	1 = Manufactured by Daimler Chrysler Corporation
2	Make	B = Dodge C = Chrysler
3	Vehicle Type	3 = Passenger Car
4	Passenger Safety	A = Active Front and Side Airbag D = Without Airbags E = Active Driver and Passenger Airbag K = Front Airbags Without Side Airbags L = Front Airbags With Side Airbags
5	Vehicle Line	C = CHRYSLER Cirus (FWD) (LHD) Mexico 4 = CHRYSLER Sebring (FWD) (RHD) BUX C = DODGE Avenger (FWD) (LHD) U.S., Canada, Mexico, BUX D = CHRYSLER Sebring (AWD) (LHD) U.S., Canada, Mexico, BUX D = DODGE Avenger (AWD) (LHD) U.S., Canada 4 = DODGE Avenger (FWD) (RHD) BUX
6	Series	4 = H (High Line) 5 = P (Premium) 6 = 6 (Sport) 7 = X (Special)

POSITION	INTERPRETATION	CODE/DESCRIPTION
6 - Export	Series	B = 4 Speed Automatic N = 5 Speed Manual C = 6 Speed Manual F = 6 Speed Automatic
7	Body Style	5 = Convertible 6 = 4 Door Sedan
8	Engine	R = 2.7L 6 Cyl. 24V DOHC Gasoline M = 3.5L 6 Cyl. 24 Valves DOHC High Output Gasoline B = 2.0L 4 Cyl. 16 Valves DOHC Dual WT Gasoline K = 2.4L 4 Cyl. 16V DOHC WT Gasoline A = 2.0L 4 Cyl. 16V DOHC Diesel F = 2.4L 14 Cyl. 16 V DOHC TURBO GASOLINE, SALES CODE (ED4) J = 2.4L 14 Cyl. DUAL WT PZEV GASOLINE, SALES CODE (EDG)
9	Check Digit	0 through 9 or X
10	Model Year	8 = 2008
11	Plant	N = Sterling Heights Assembly Plant
12 through 17	Sequence Number	6 digit number assigned by assembly plant.

VIN CHECK DIGIT

To protect the customer from theft and possible fraud the manufacturer is required to include a Check Digit at the ninth position of the Vehicle Identification Number. The check digit is used by the manufacturer and government agencies to verify the authenticity of the vehicle and official documentation. The formula to use the check digit is not released to the general public.

Back to Index

VEHICLE CERTIFICATION LABEL

DESCRIPTION

A vehicle certification label is attached to every DaimlerChrysler Corporation vehicle. The label certifies that the vehicle conforms to all applicable Federal Motor Vehicle Standards. The label also lists:

- Month and year of vehicle manufacture.
- Gross Vehicle Weight Rating (GVWR). The gross front and rear axle weight ratings (GAWR's) are based on a minimum rim size and maximum cold tire inflation pressure.
- Vehicle Identification Number (VIN).
- Type of vehicle.
- Type of rear wheels.
- Bar code.
- Month, Day and Hour (MDH) of final assembly.
- Paint and Trim codes.
- Country of origin.

The label is located on the driver-side door shut-face.

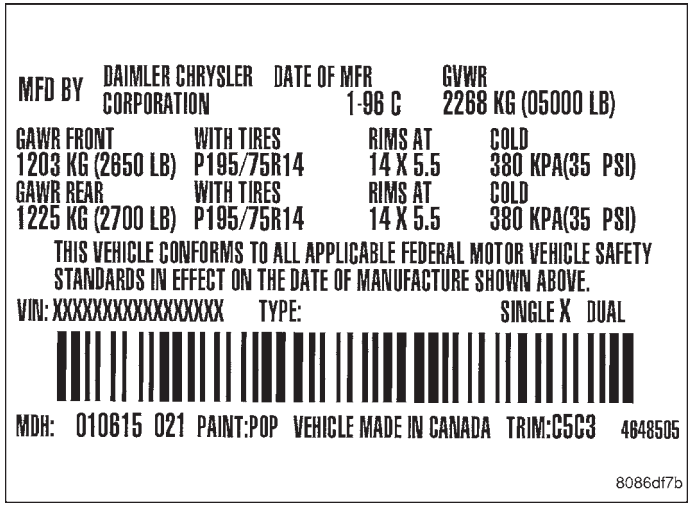

Back to Index

CHRYSLER SEBRING CONVERTIBLE
VEHICLE IDENTIFICATION NUMBER DESCRIPTION

The Vehicle Identification Number (VIN) plate is located on the lower left A-pillar and is visible through the windshield. The VIN consists of 17 characters in a combination of letters and numbers that provide specific information about the vehicle. Refer to VIN Code Breakdown Chart for decoding information. To protect the consumer from theft and possible fraud the manufacturer is required to include a Check Digit at the ninth position of the vehicle identification number. The check digit is used by the manufacturer and government agencies to verify the authenticity of the vehicle and official documentation. The formula to use the check digit is not released to the general public.

VEHICLE IDENTIFICATION NUMBER (VIN)
1 - VEHICLE IDENTIFICATION NUMBER (VIN)

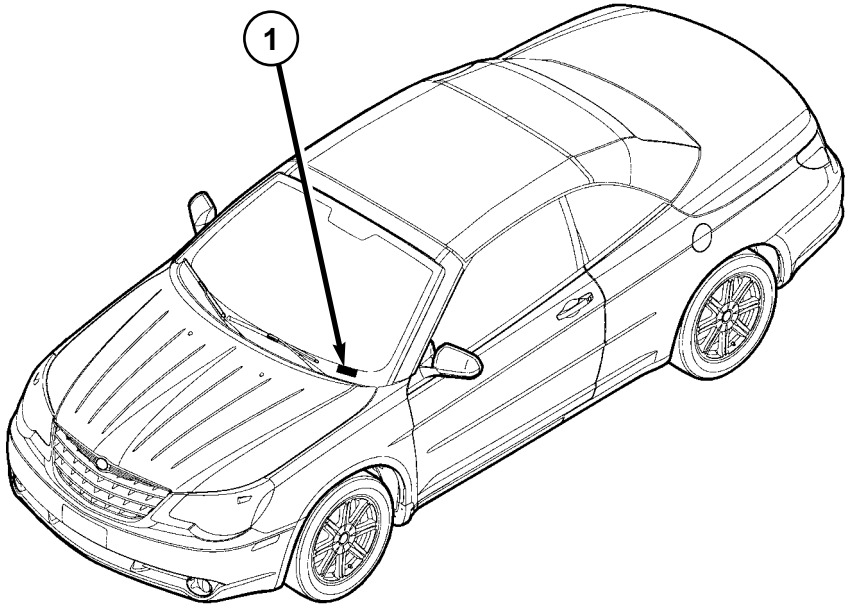

Back to Index

VEHICLE IDENTIFICATION NUMBER DECODING CHART

POSITION	INTERPRETATION	CODE/DESCRIPTION
1	Country of Origin	1 = Manufactured by Daimler Chrysler Corporation
2	Make	C = Chrysler
3	Vehicle Type	3 = Passenger Car
4	Passenger Safety	D = Without Airbags E = Active Driver and Passenger Airbag K = Front Airbags Without Side Airbags
5	Vehicle Line	C = CHRYSLER Cirus (FWD) (LHD) Mexico 4 = CHRYSLER Sebring (FWD) (RHD) BUX D = CHRYSLER Sebring (AWD) (LHD) U.S., Canada, Mexico, BUX
6	Series	4 = H (High Line) 5 = P (Premium) 6 = 6 (Sport) 7 = X (Special)

POSITION	INTERPRETATION	CODE/DESCRIPTION
6 - Export	Series	B = 4 Speed Automatic N = 5 Speed Manual C = 6 Speed Manual F = 6 Speed Automatic
7	Body Style	5 = Convertible
8	Engine	R = 2.7L 6 Cyl. 24V DOHC Gasoline M = 3.5L 6 Cyl. 24 Valves DOHC High Output Gasoline B = 2.0L 4 Cyl. 16 Valves DOHC Dual WT Gasoline K = 2.4L 4 Cyl. 16V DOHC WT Gasoline A = 2.0L 4 Cyl. 16V DOHC Diesel F = 2.4L 14 Cyl. 16 V DOHC TURBO GASOLINE, SALES CODE (ED4) J = 2.4L 14 Cyl. DUAL WT PZEV GASOLINE, SALES CODE (EDG)
9	Check Digit	0 through 9 or X
10	Model Year	8 = 2008
11	Plant	N = Sterling Heights Assembly Plant
12 through 17	Sequence Number	6 digit number assigned by assembly plant.

VIN CHECK DIGIT

To protect the customer from theft and possible fraud the manufacturer is required to include a Check Digit at the ninth position of the Vehicle Identification Number. The check digit is used by the manufacturer and government agencies to verify the authenticity of the vehicle and official documentation. The formula to use the check digit is not released to the general public.

Back to Index

VEHICLE CERTIFICATION LABEL

DESCRIPTION

A vehicle certification label is attached to every Chrysler LLC vehicle. The label certifies that the vehicle conforms to all applicable Federal Motor Vehicle Standards. The label also lists:

- Month and year of vehicle manufacture.
- Gross Vehicle Weight Rating (GVWR). The gross front and rear axle weight ratings (GAWR's) are based on a minimum rim size and maximum cold tire inflation pressure.
- Vehicle Identification Number (VIN).
- Type of vehicle.
- Type of rear wheels.
- Bar code.
- Month, Day and Hour (MDH) of final assembly.
- Paint and Trim codes.
- Country of origin.

The label is located on the driver-side door shut-face.

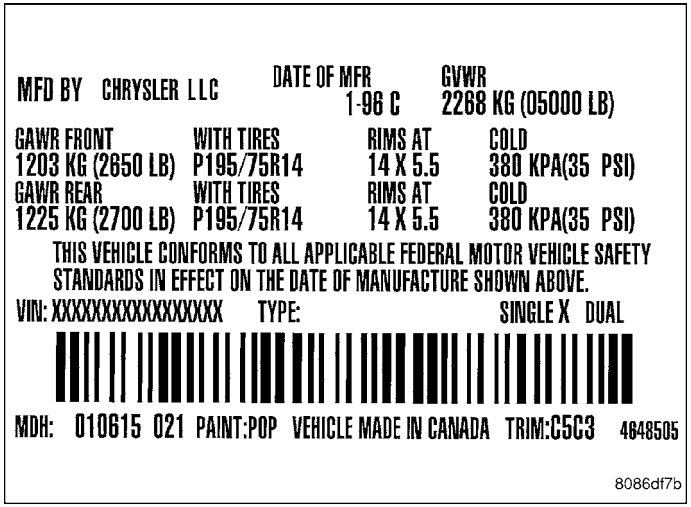

Back to Index

WELD LOCATION OVERVIEW ZONES

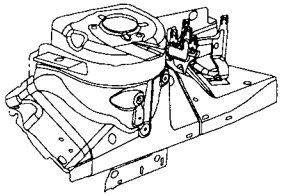

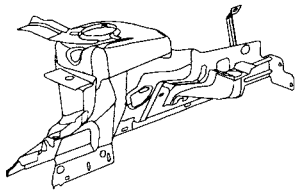

OVERVIEW 2

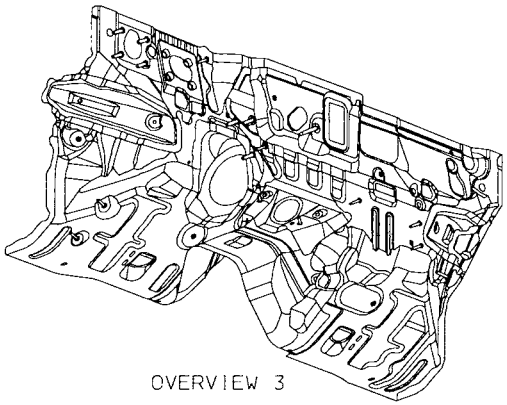

OVERVIEW 3

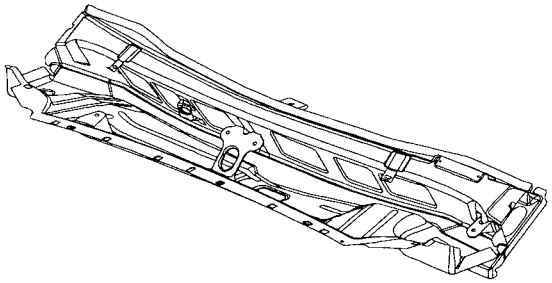

OVERVIEW 4

Back to Index

WELD LOCATION OVERVIEW ZONES

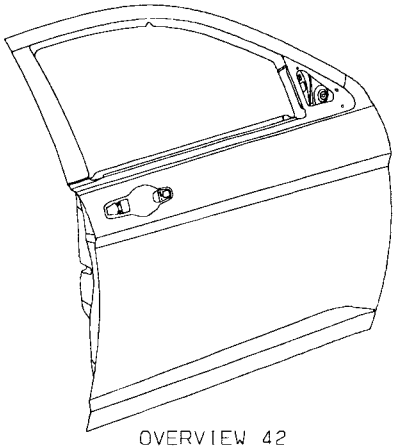

OVERVIEW 42

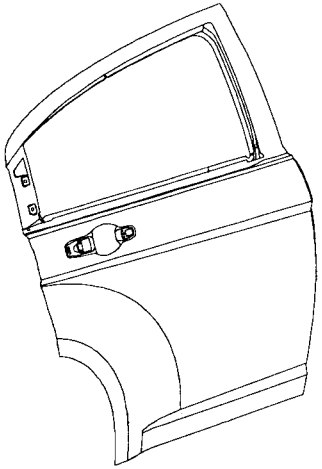

OVERVIEW 43

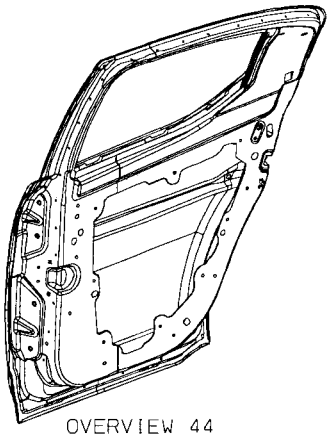

OVERVIEW 44

Back to Index

WELD LOCATION OVERVIEW ZONES

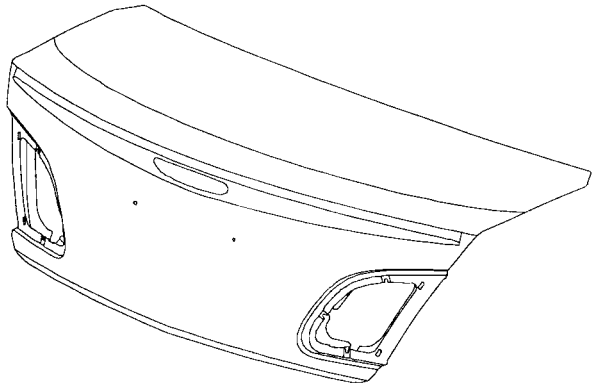

OVERVIEW 46

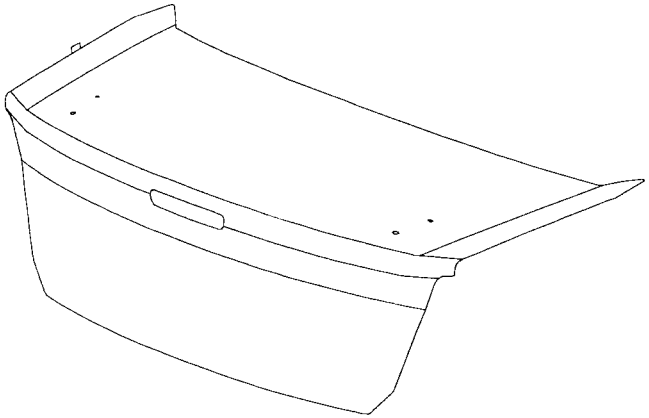

OVERVIEW 47

Back to Index

WELD LOCATION OVERVIEW ZONES

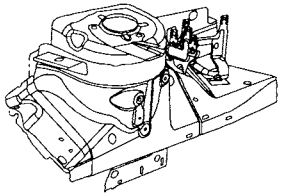

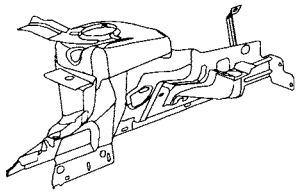

OVERVIEW 2

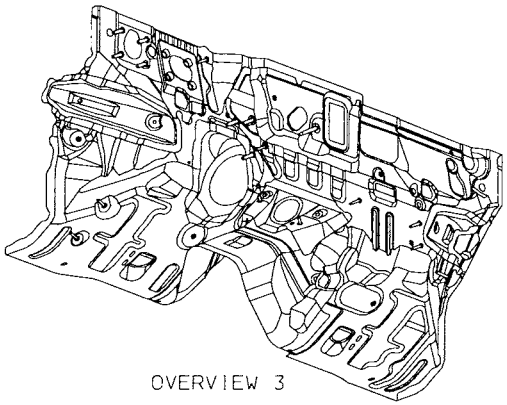

OVERVIEW 3

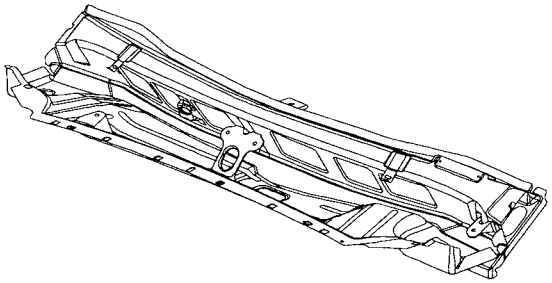

OVERVIEW 4

Back to Index

WELD LOCATION OVERVIEW ZONES

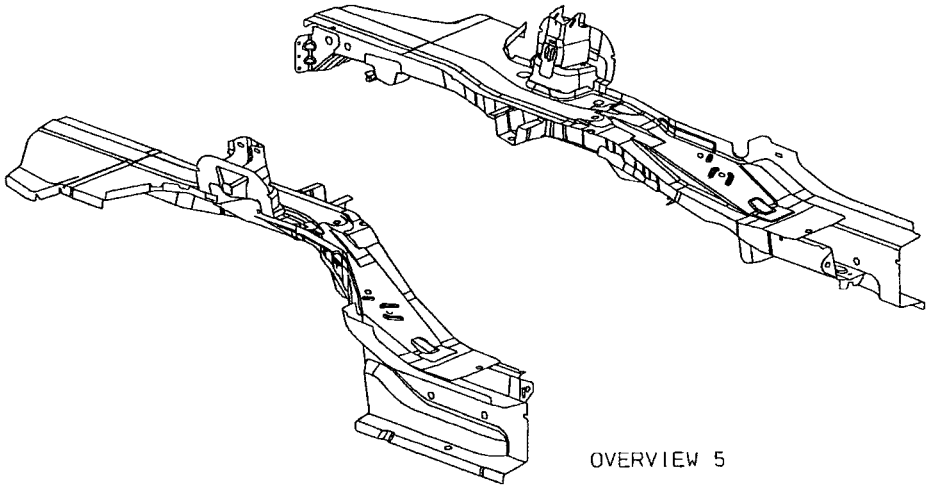

Back to Index

WELD LOCATION OVERVIEW ZONES

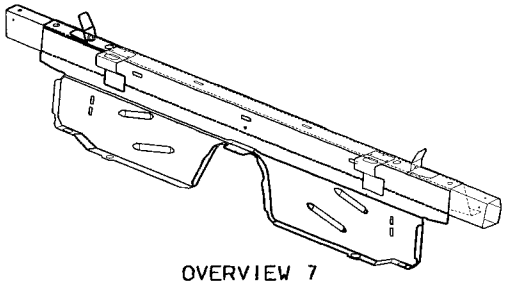

OVERVIEW 7

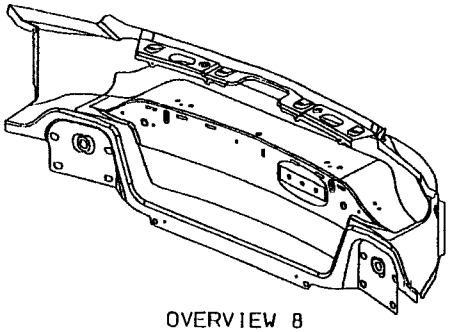

OVERVIEW 8

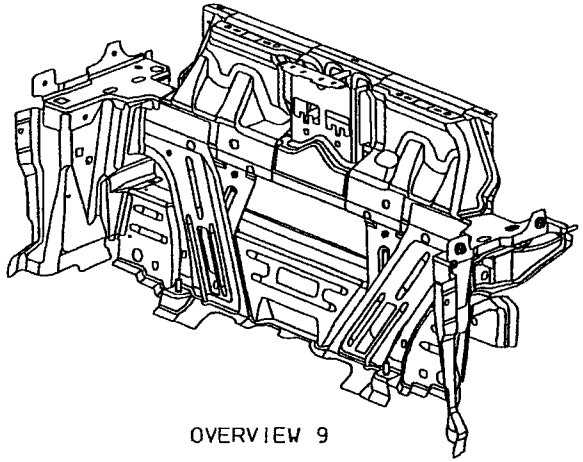

OVERVIEW 9

Back to Index

WELD LOCATION OVERVIEW ZONES

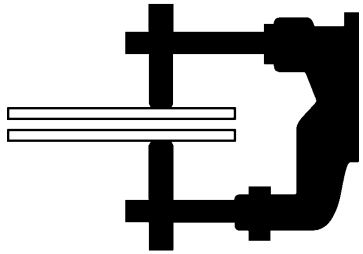

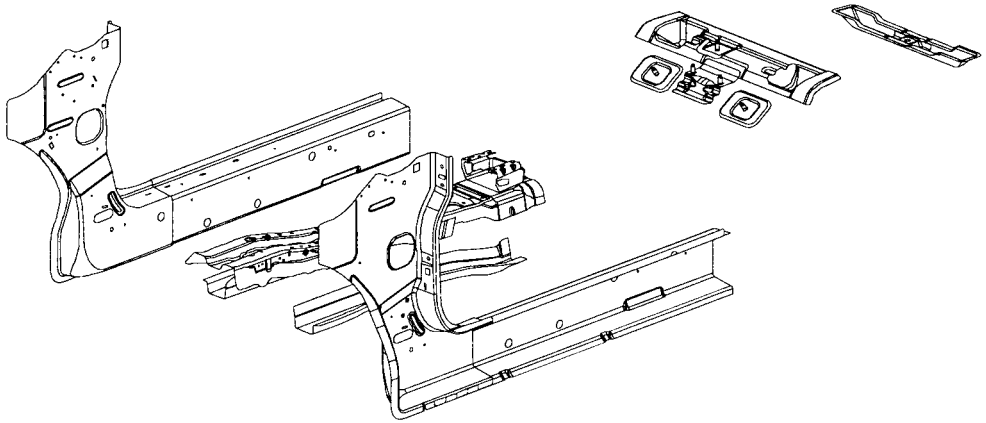

OVERVIEW 10

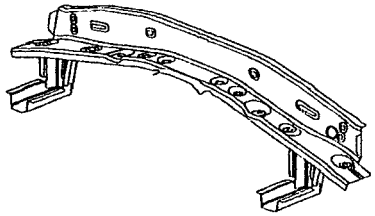

OVERVIEW 11

Back to Index

WELD LOCATION OVERVIEW ZONES

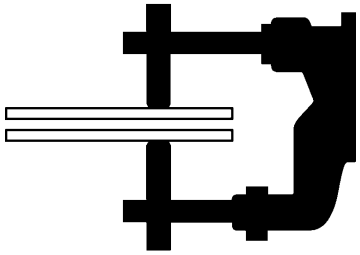

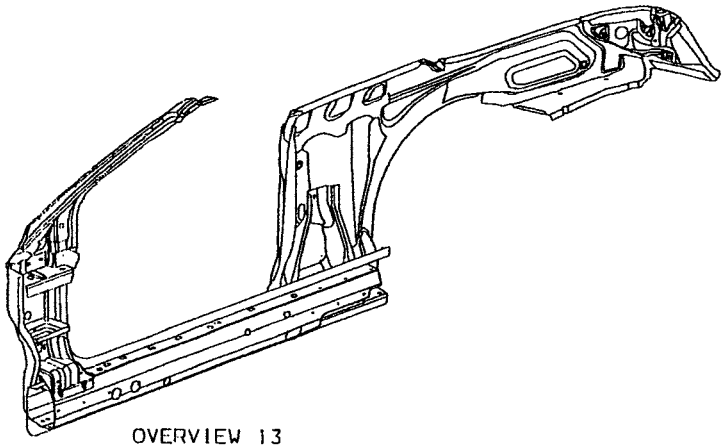

OVERVIEW 13

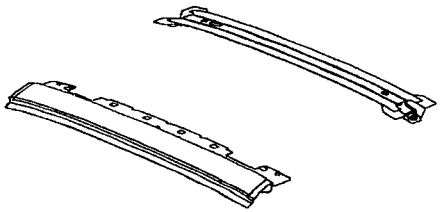

OVERVIEW 15

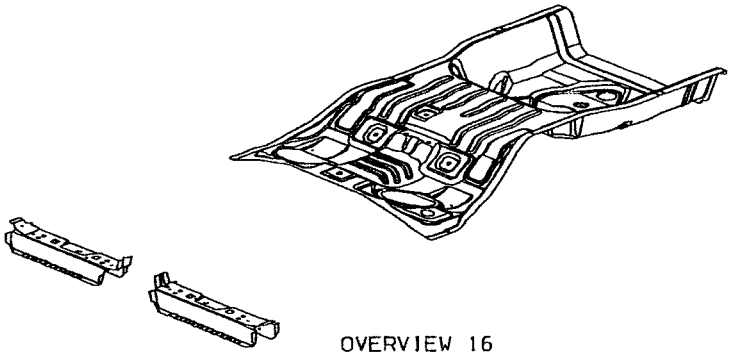

OVERVIEW 16

Back to Index

WELD LOCATION OVERVIEW ZONES

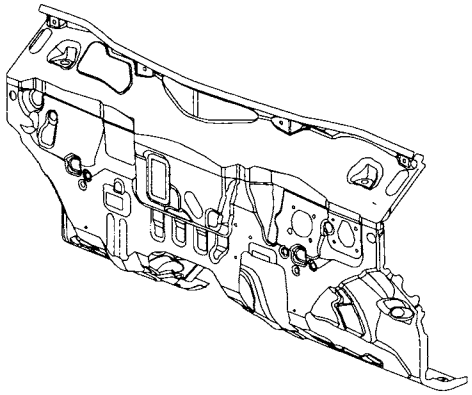

OVERVIEW 18

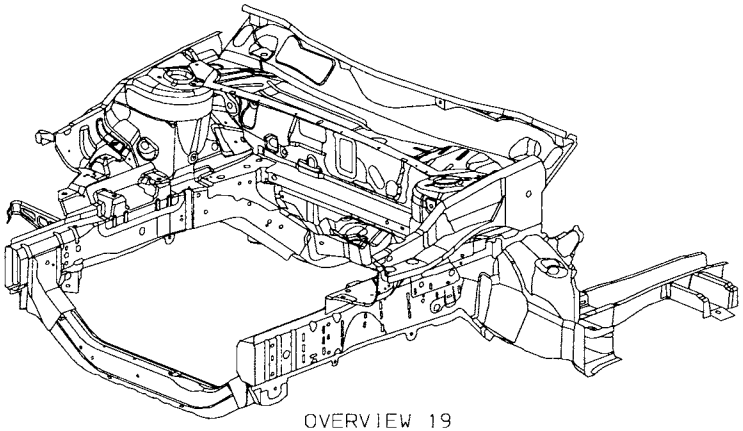

OVERVIEW 19

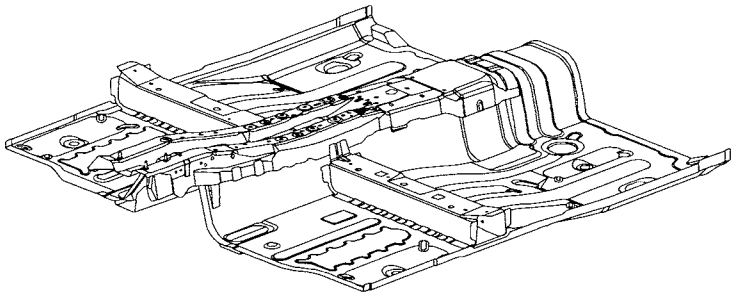

OVERVIEW 20

Back to Index

WELD LOCATION OVERVIEW ZONES

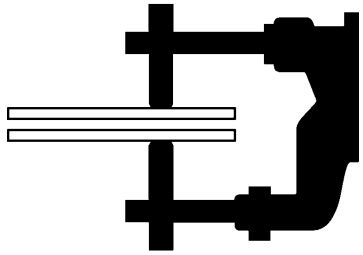

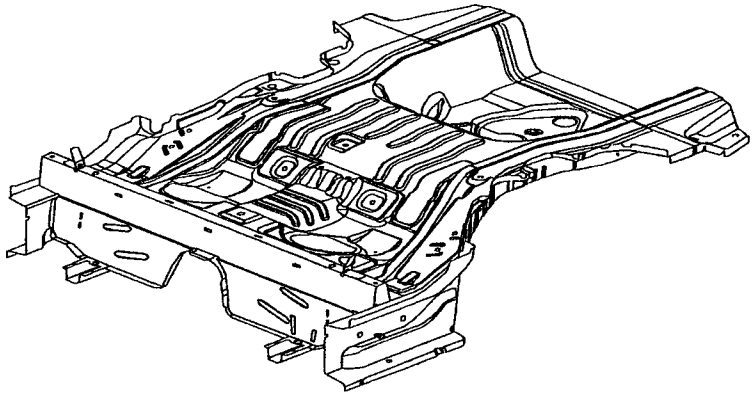

OVERVIEW 21

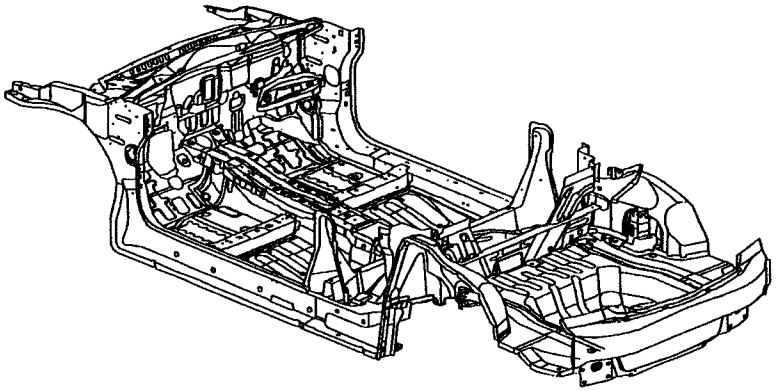

OVERVIEW 23

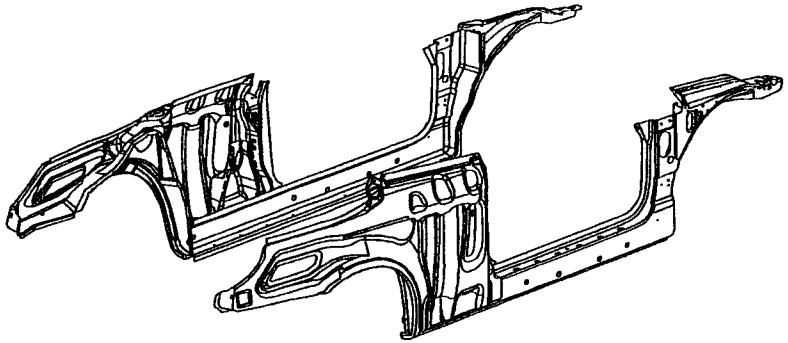

OVERVIEW 25

Back to Index

WELD LOCATION OVERVIEW ZONES

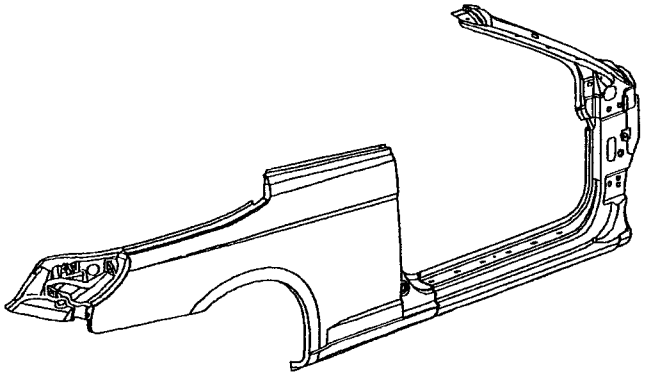

OVERVIEW 28

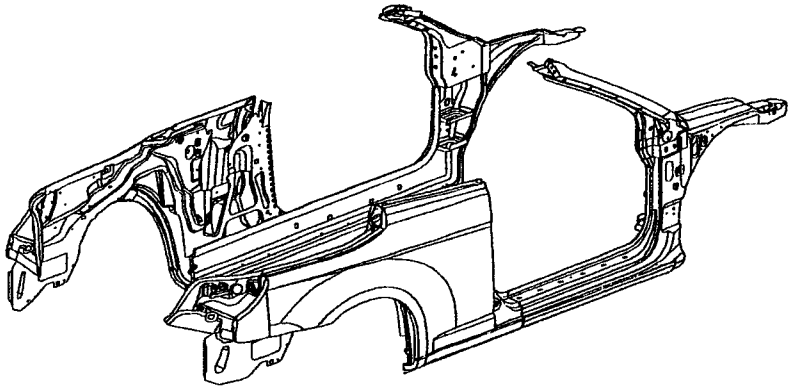

OVERVIEW 31

Back to Index

WELD LOCATION OVERVIEW ZONES

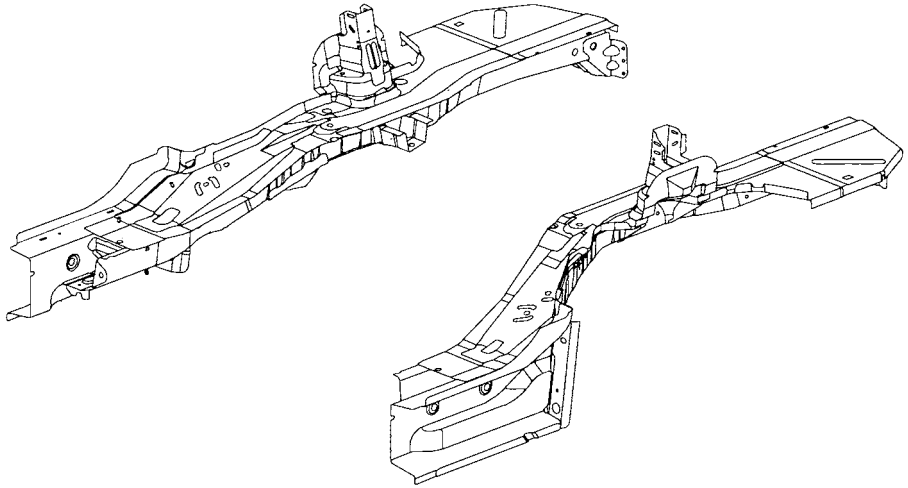

OVERVIEW 6

Back to Index

WELD LOCATION OVERVIEW ZONES

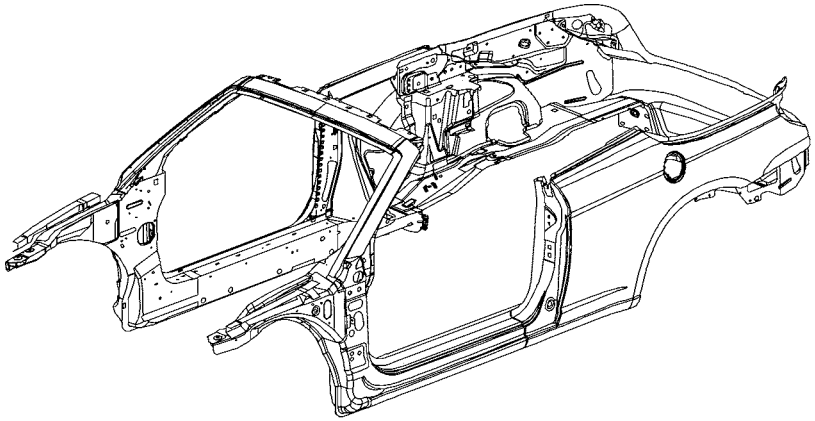

OVERVIEW 34

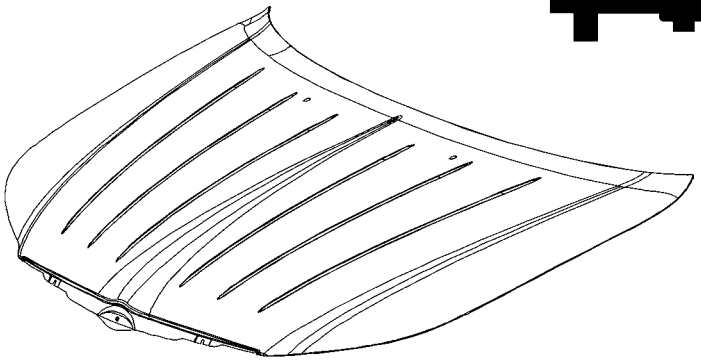

OVERVIEW 39

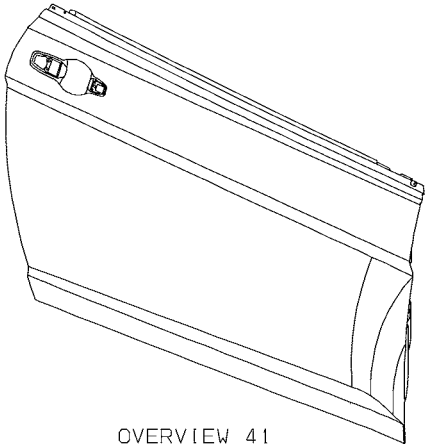

OVERVIEW 41

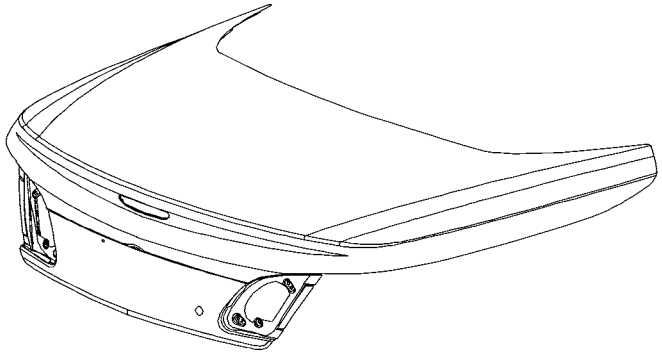

OVERVIEW 45

Back to Index

WELD LOCATION OVERVIEW ZONES

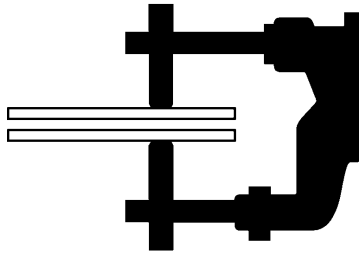

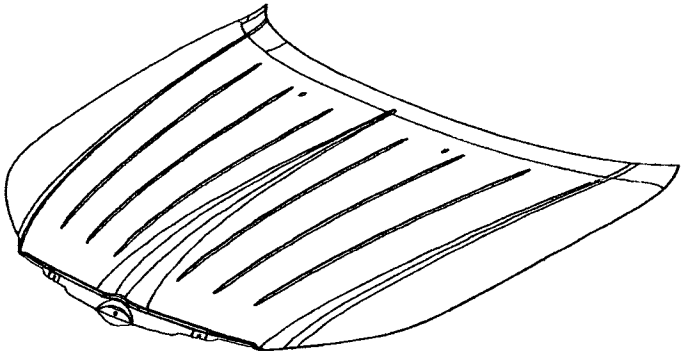

OVERVIEW 39

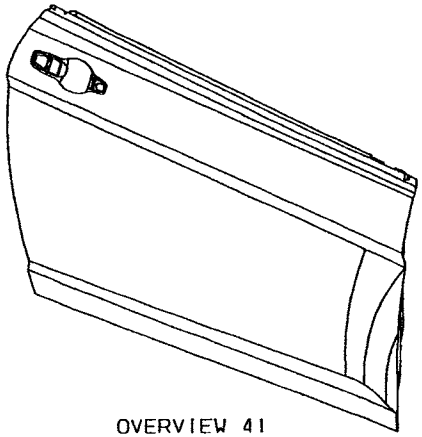

OVERVIEW 41

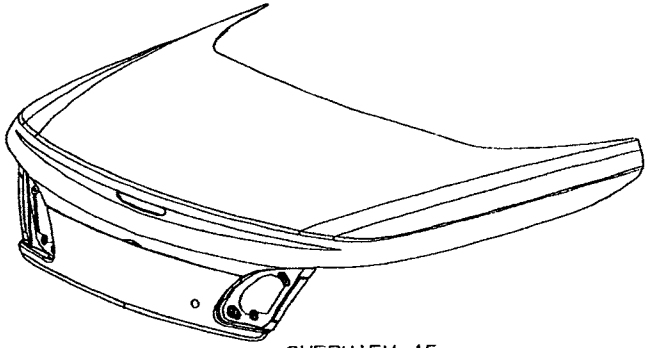

OVERVIEW 45

Back to Index

WELD LOCATION OVERVIEW ZONES

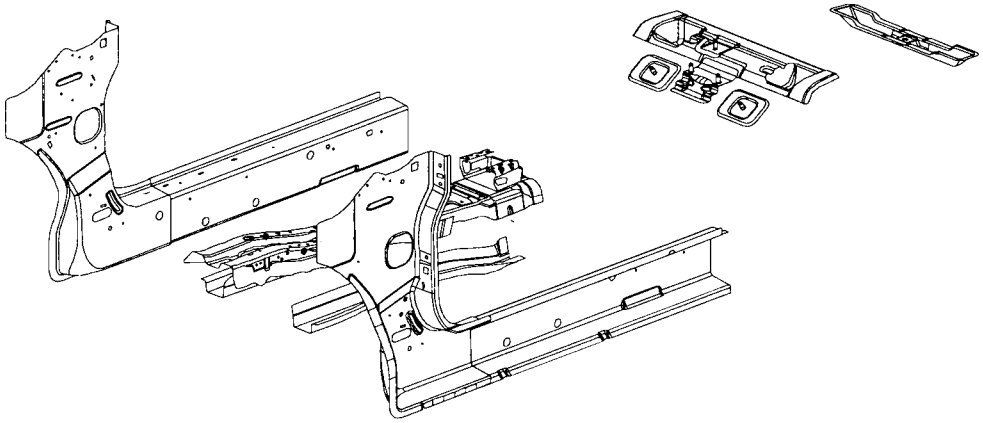

OVERVIEW 10

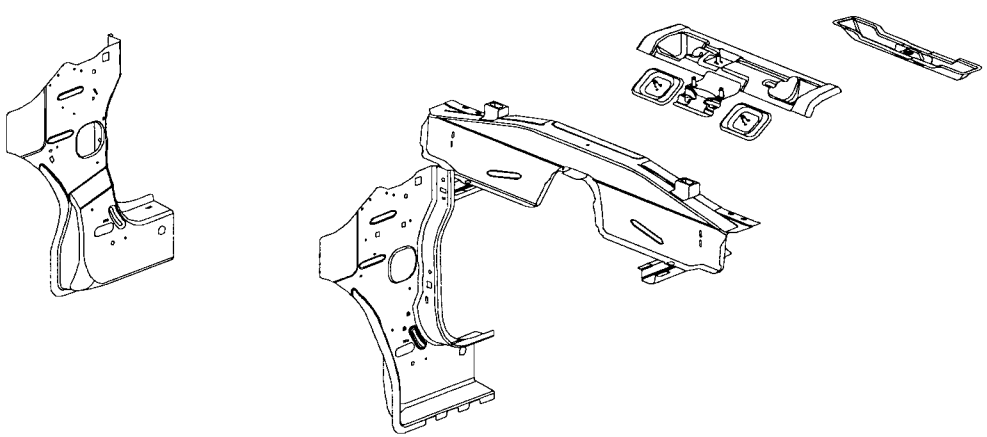

OVERVIEW 12

Back to Index

WELD LOCATION OVERVIEW ZONES

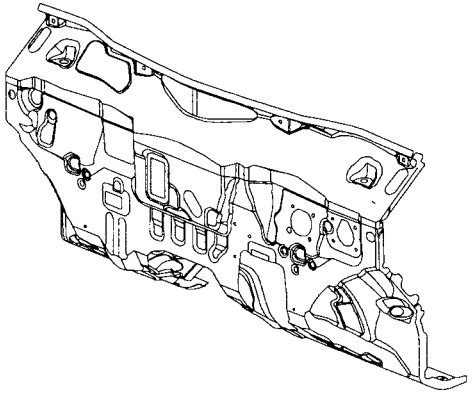

OVERVIEW 18

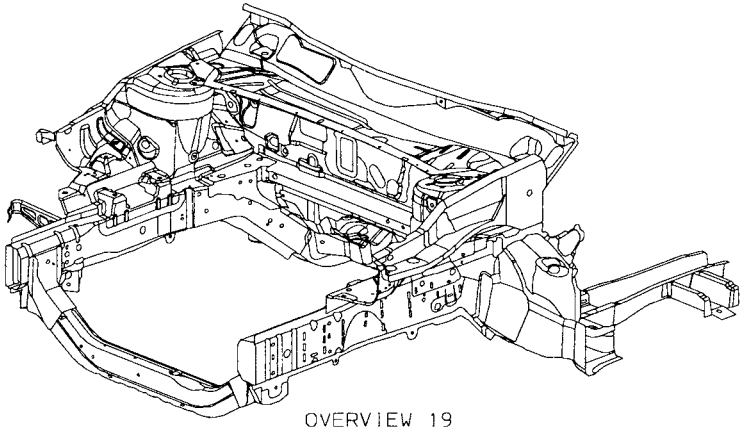

OVERVIEW 19

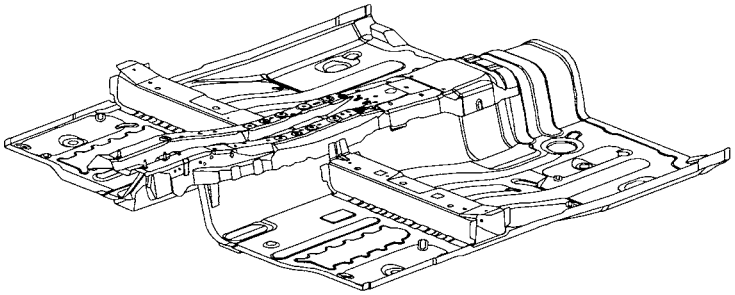

OVERVIEW 20

Back to Index

WELD LOCATION OVERVIEW ZONES

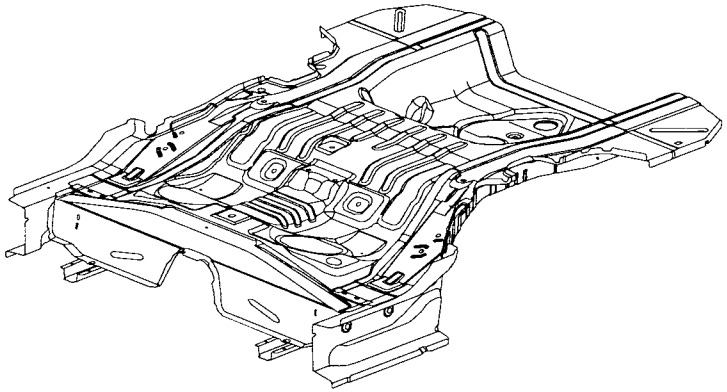

OVERVIEW 22

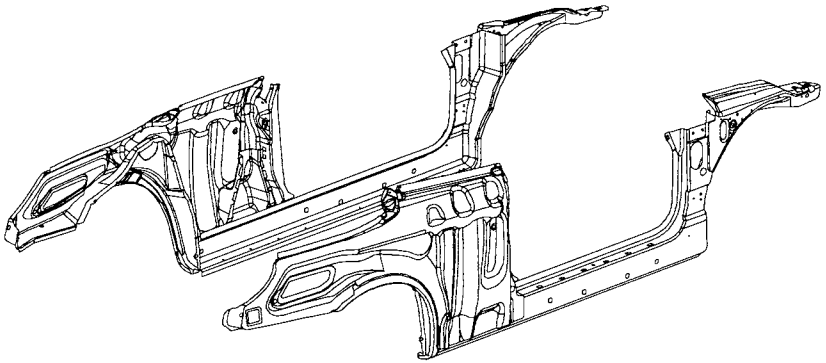

OVERVIEW 25

Back to Index

WELD LOCATION OVERVIEW ZONES

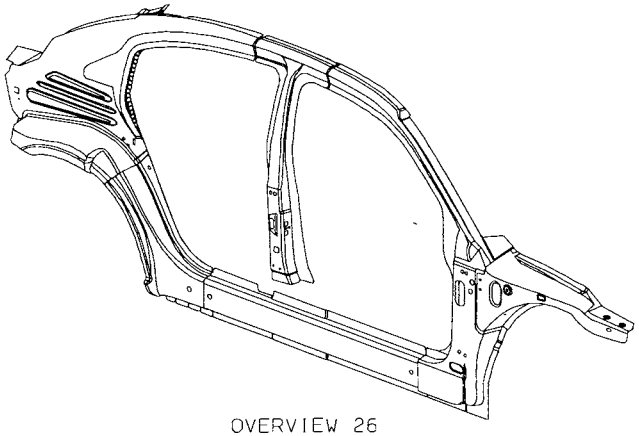

OVERVIEW 26

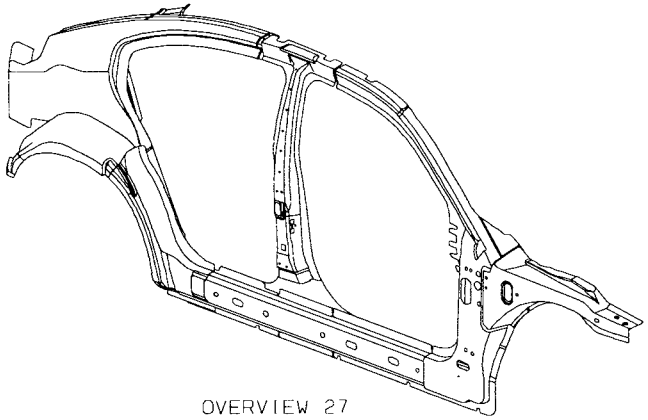

OVERVIEW 27

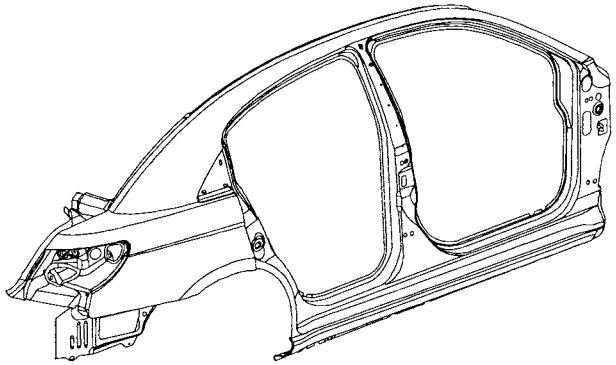

OVERVIEW 29

Back to Index

WELD LOCATION OVERVIEW ZONES

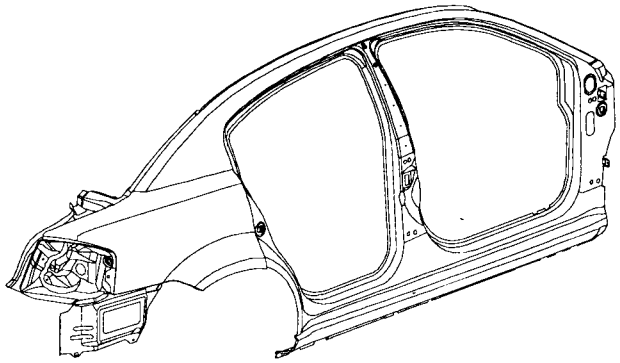

OVERVIEW 30

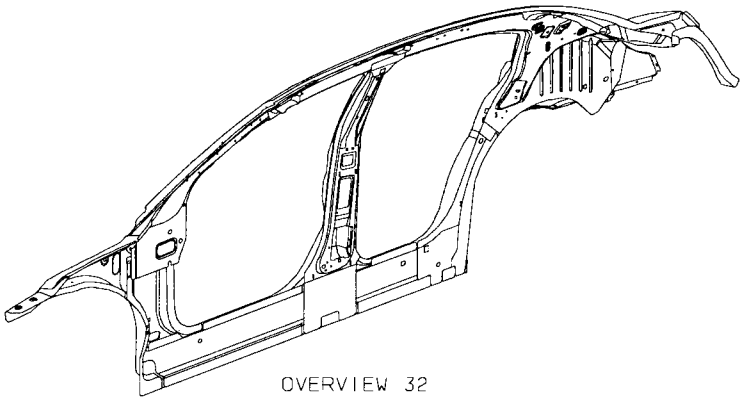

OVERVIEW 32

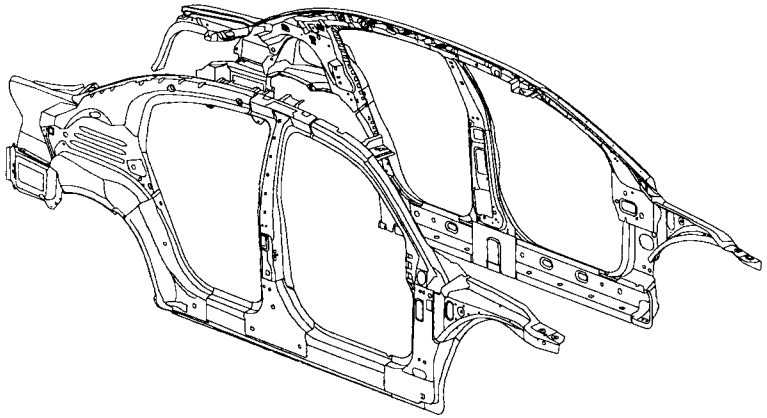

OVERVIEW 33

Back to Index

WELD LOCATION OVERVIEW ZONES

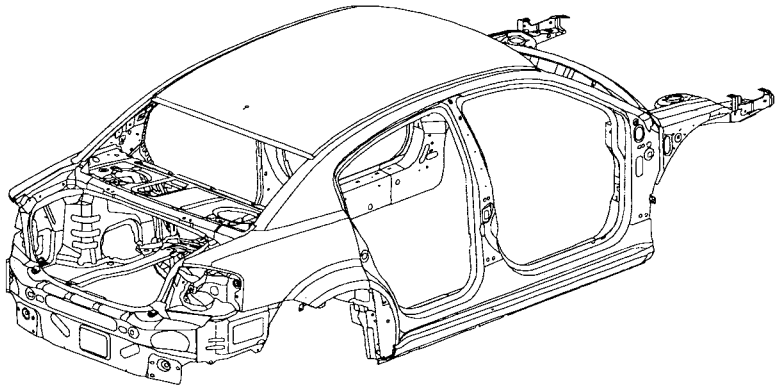

OVERVIEW 36

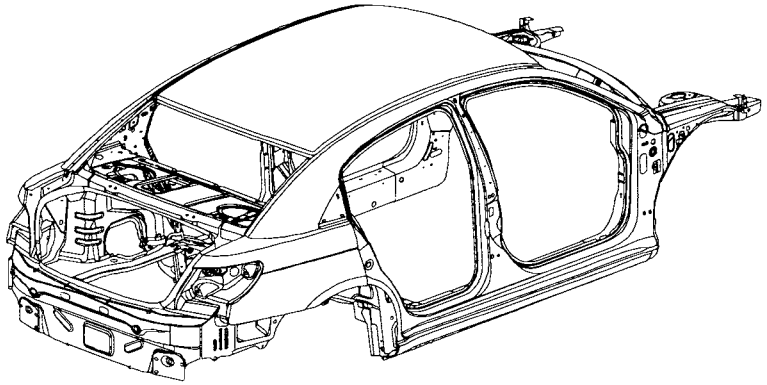

OVERVIEW 35

Back to Index

WELD LOCATION OVERVIEW ZONES

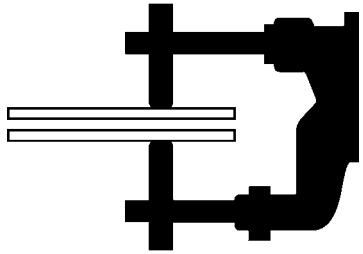

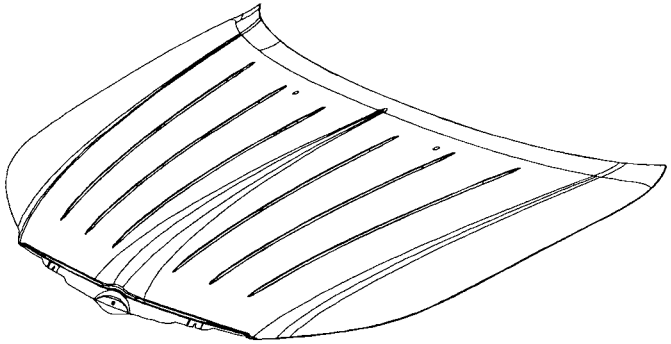

OVERVIEW 39

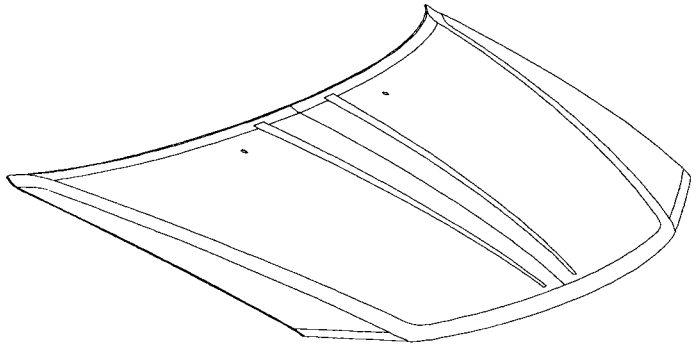

OVERVIEW 40

Back to Index

WELDED PANEL REPLACEMENT

Chrysler Sebring
Dodge Avenger

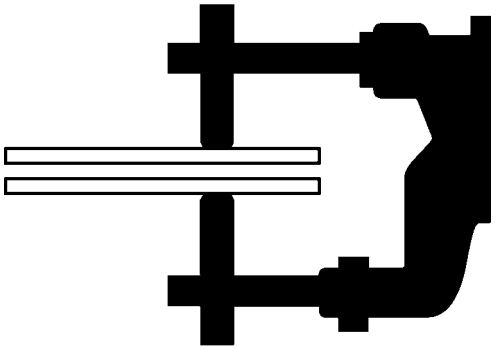

The basic parts of the body structure are the welded panels. This section contains a brief description of the placement of some of the panels and their weld locations.

Note: To ensure the strongest, most durable and cleanest welds possible, perform testing before and during all weld procedures. Always follow American Weld Society specifications and procedures.

Note: Diagrams do not show all of the parts.

Back to Index

WELDED PANEL REPLACEMENT

Chrysler Sebring Convertible

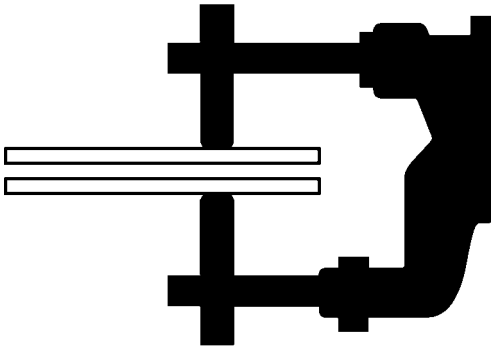

The basic parts of the body structure are the welded panels. This section contains a brief description of the placement of some of the panels and their weld locations.

Note: To ensure the strongest, most durable and cleanest welds possible, perform testing before and during all weld procedures. Always follow American Weld Society specifications and procedures.

Note: Diagrams do not show all of the parts.

Back to Index

CHRYSLER SEBRING WHEELHOUSE SECTION

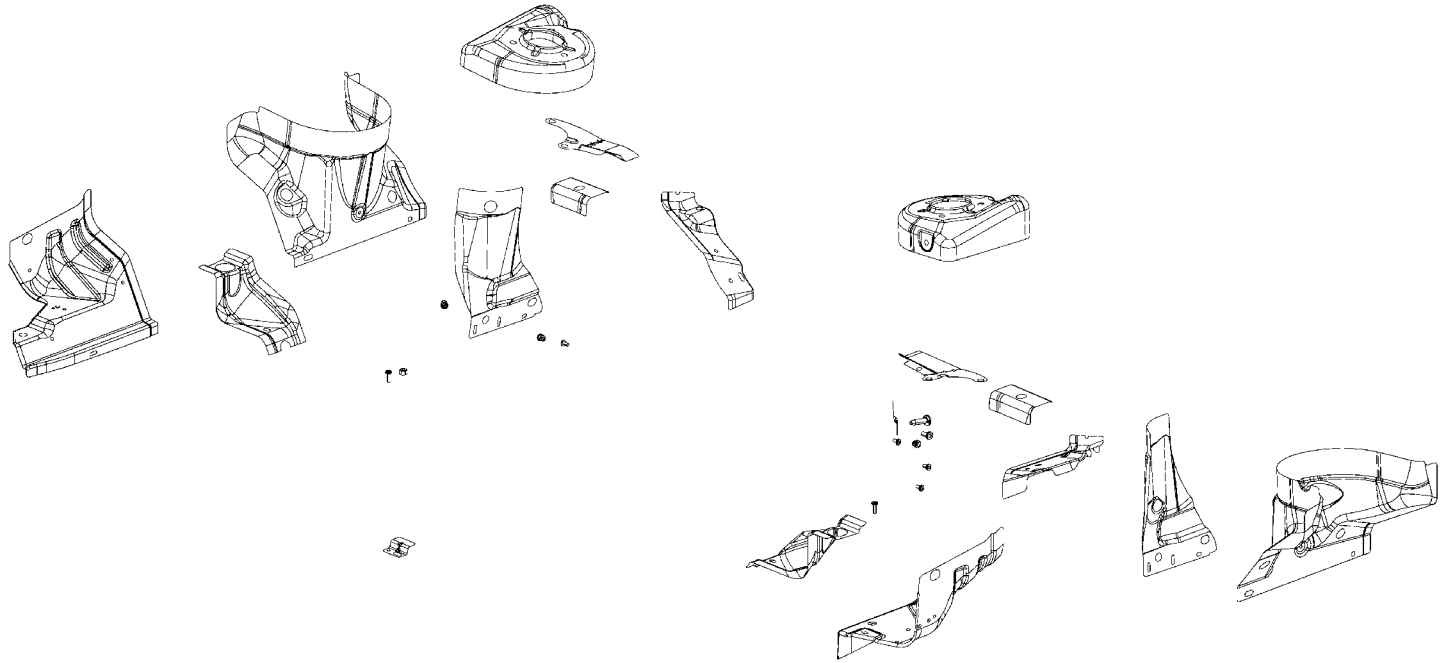

AA GUSSET – SHOCK –
AA GUSSET – SHOCK –
AB PANEL – SHOCK –
AB PANEL – SHOCK –
AC REINF – CAP –
AC REINF – CAP –
AD REINF – BRACE –
AD REINF – BRACE –
AE REINF – SHOCK TOWER MOUNTING FRT RT–
AE REINF – SHOCK TOWER MOUNTING FRT LT–
AF GUSSET – WHEELHOUSE –
AF GUSSET – WHEELHOUSE –
AG SHIELD – FENDER RT –
AG SHIELD – FENDER LT –

AH GUSSET – ENGINE MOUNT –
AJ GUSSET – TRANSMISSION –
AK BRACKET – BATTERY REMOTE POSITIVE START POST –
AL BRACKET – POWER MODULE –
AM BRACKET – COOLANT RECOVERY BOTTLE –
AN NUT/WELD.HEX – NIBS.NO.FIN.PILOT.PT – P/S RESERVOIR TO BODY
AN NUT/WELD.HEX – NIBS.NO.FIN.PILOT.PT – COOLANT BOTTLE TO BODY
AP STUD.WELD/INTERNAL – HEADER.PT.NIBS.NO.FIN – STABILITY MODULE
AR BRACKET – POWER STEERING RESERVOIR –

Back to Index

PARTS IDENTIFICATION LEGEND, OVERVIEW 2

AA GUSSET – SHOCK –
AA GUSSET – SHOCK –
AB PANEL – SHOCK –
AB PANEL – SHOCK –
AC REINF – CAP –
AC REINF – CAP –
AD REINF – BRACE –
AD REINF – BRACE –
AE REINF – SHOCK TOWER MOUNTING FRT RT–
AE REINF – SHOCK TOWER MOUNTING FRT LT–
AF GUSSET – WHEELHOUSE –
AF GUSSET – WHEELHOUSE –
AG SHIELD – FENDER RT –
AG SHIELD – FENDER LT –
AH GUSSET – ENGINE MOUNT –
AJ GUSSET – TRANSMISSION –
AK BRACKET – BATTERY REMOTE POSITIVE START POST –
AL BRACKET – POWER MODULE –
AM BRACKET – COOLANT RECOVERY BOTTLE –
AN NUT/WELD.HEX – NIBS.NO.FIN.PILOT.PT – P/S RESERVOIR TO BODY
AN NUT/WELD.HEX – NIBS.NO.FIN.PILOT.PT – COOLANT BOTTLE TO BODY
AP STUD.WELD/INTERNAL – HEADER.PT.NIBS.NO.FIN – STABILITY MODULE
AR BRACKET – POWER STEERING RESERVOIR –

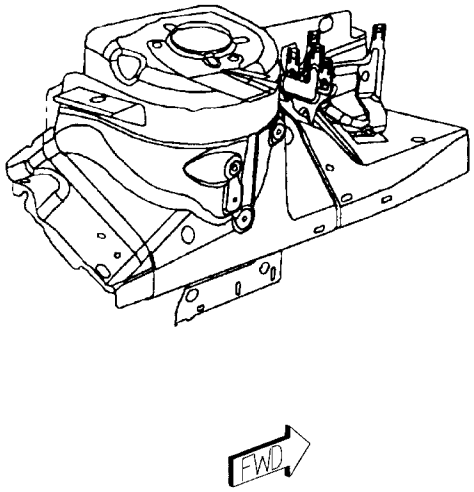

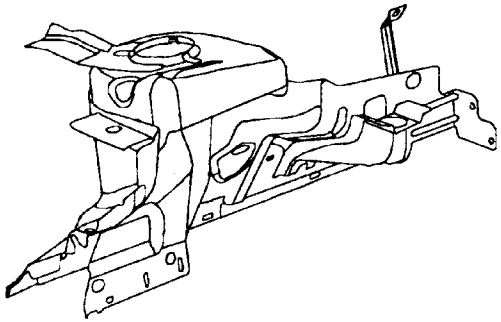

Back to Index

WELD LAYOUT LOCATION GUIDE

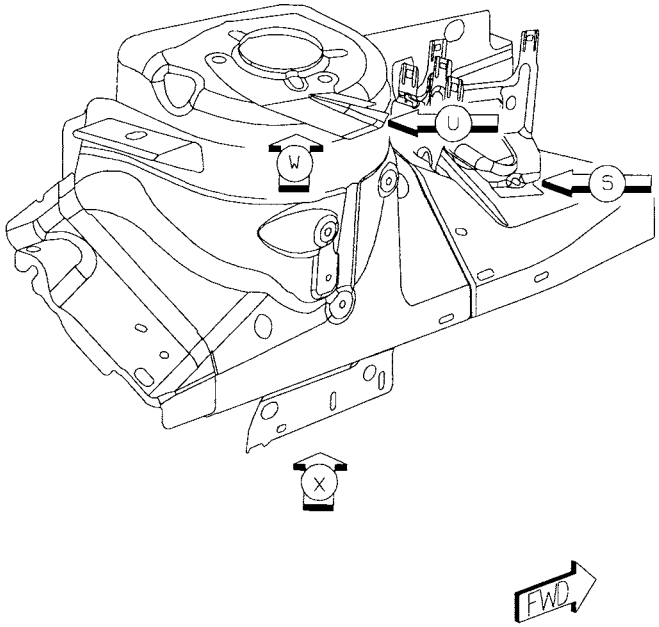

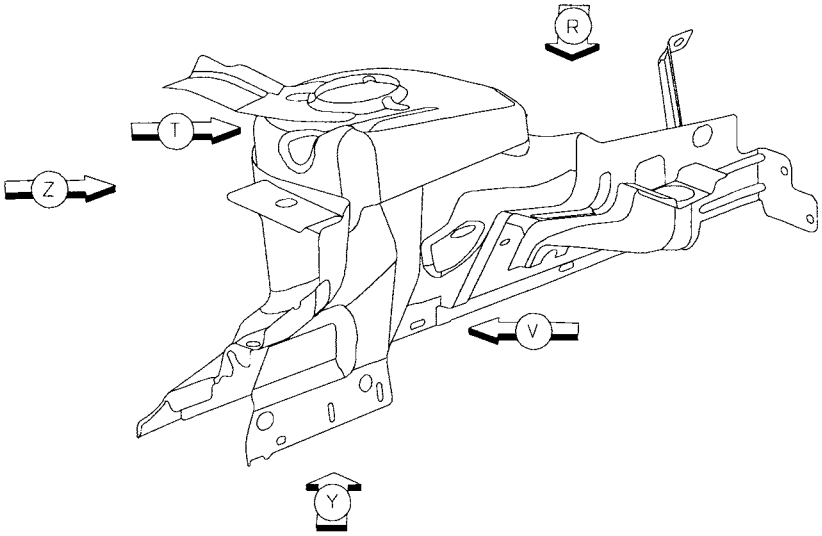

Back to Index

01 AA TO AC 2R S/WELDS (ORD)
02 AD TO AB 3R S/WELDS (CRT)
03 AE TO AB 8R S/WELDS (ORD)

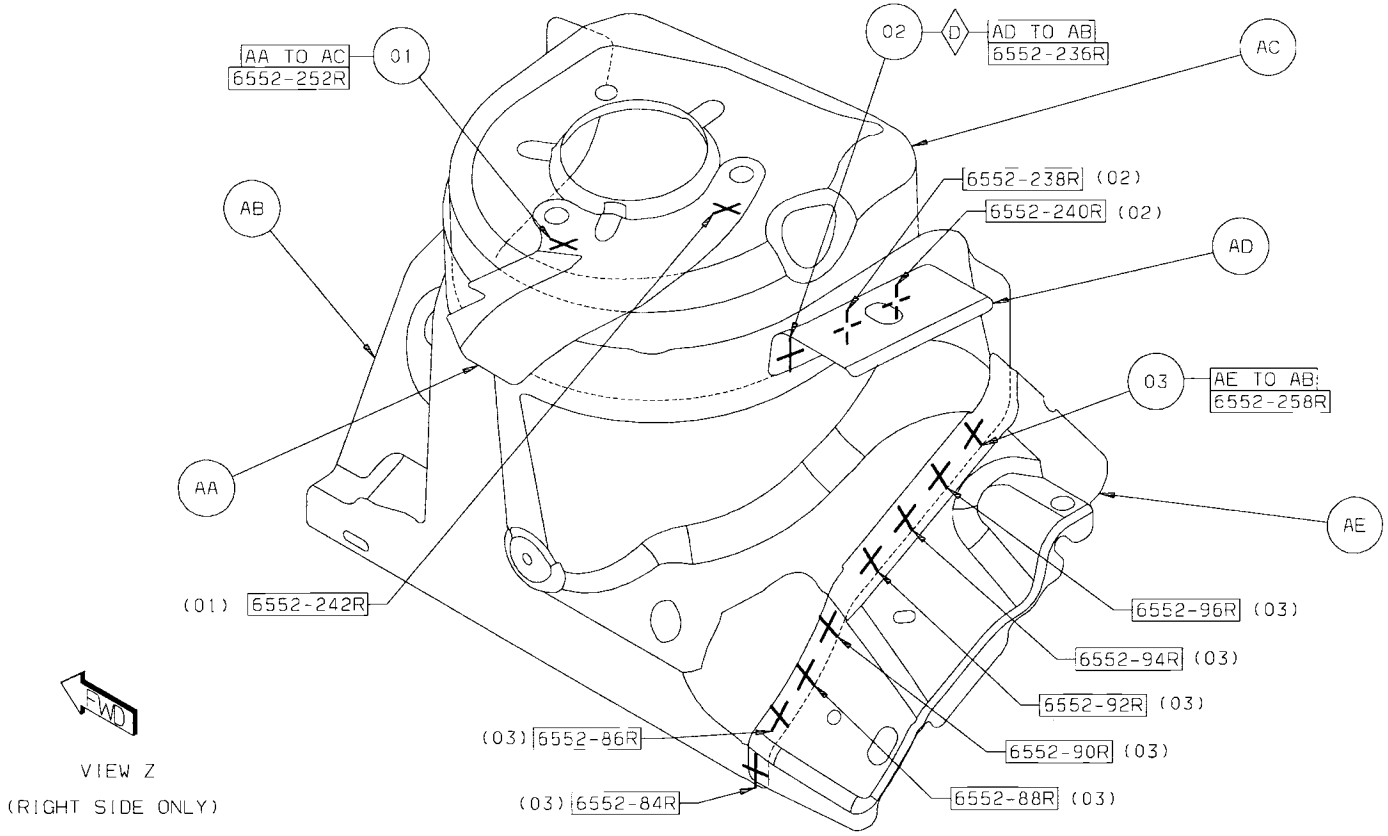

Back to Index

04 AG TO AB 9R S/WELDS (ORD)
05 AF TO AB 12R S/WELDS (ORD)
06 AF TO AC TO AB 3R S/WELDS (CRT)
07 AH TO AG 9R S/WELDS (ORD)

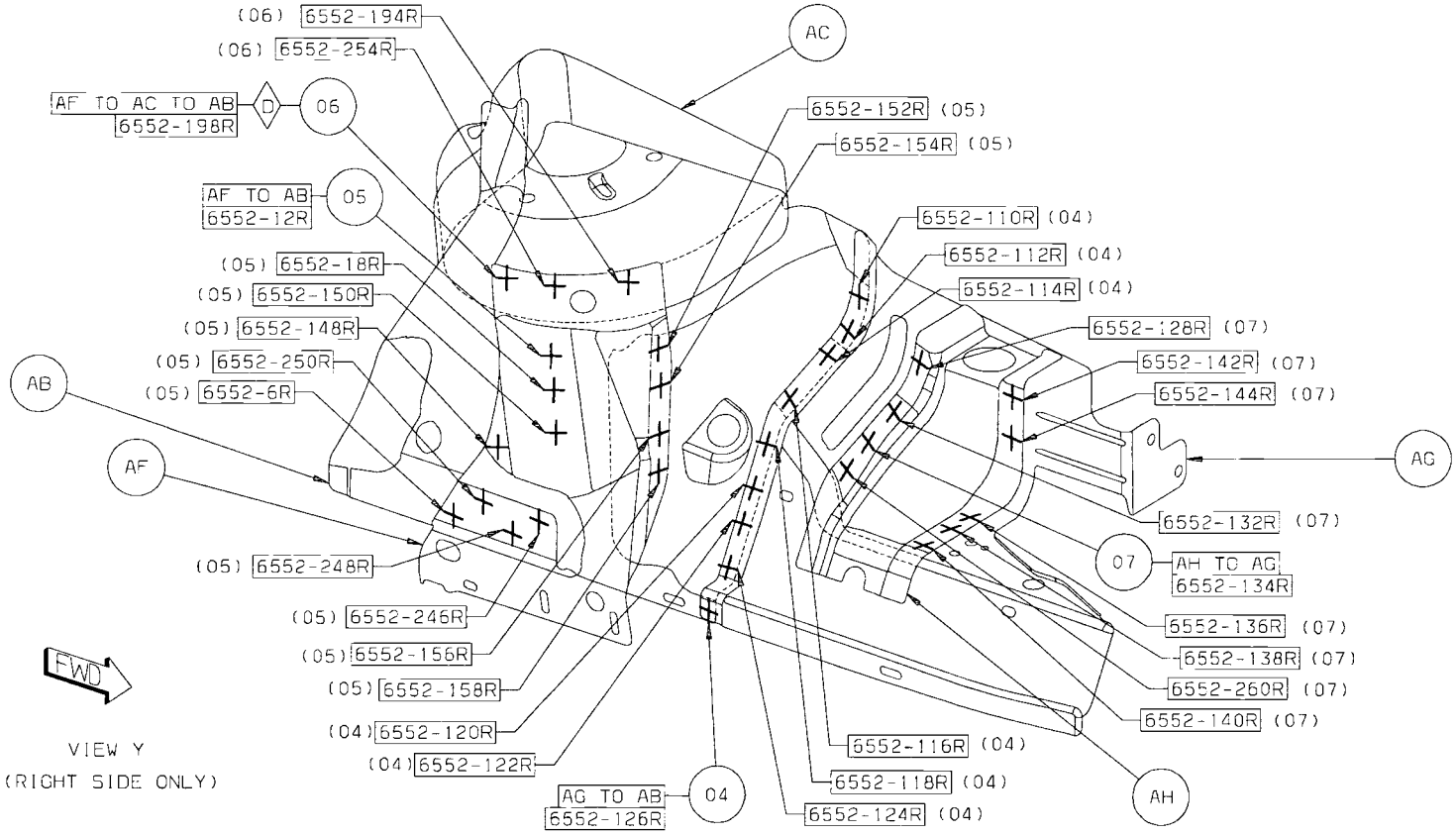

Back to Index

08 AE TO AB 7L S/WELDS (ORD)
09 AD TO AB 3L S/WELDS (ORD)
10 AG TO AB 8L S/WELDS (ORD)
11 AA TO AC 2L S/WELDS (ORD)

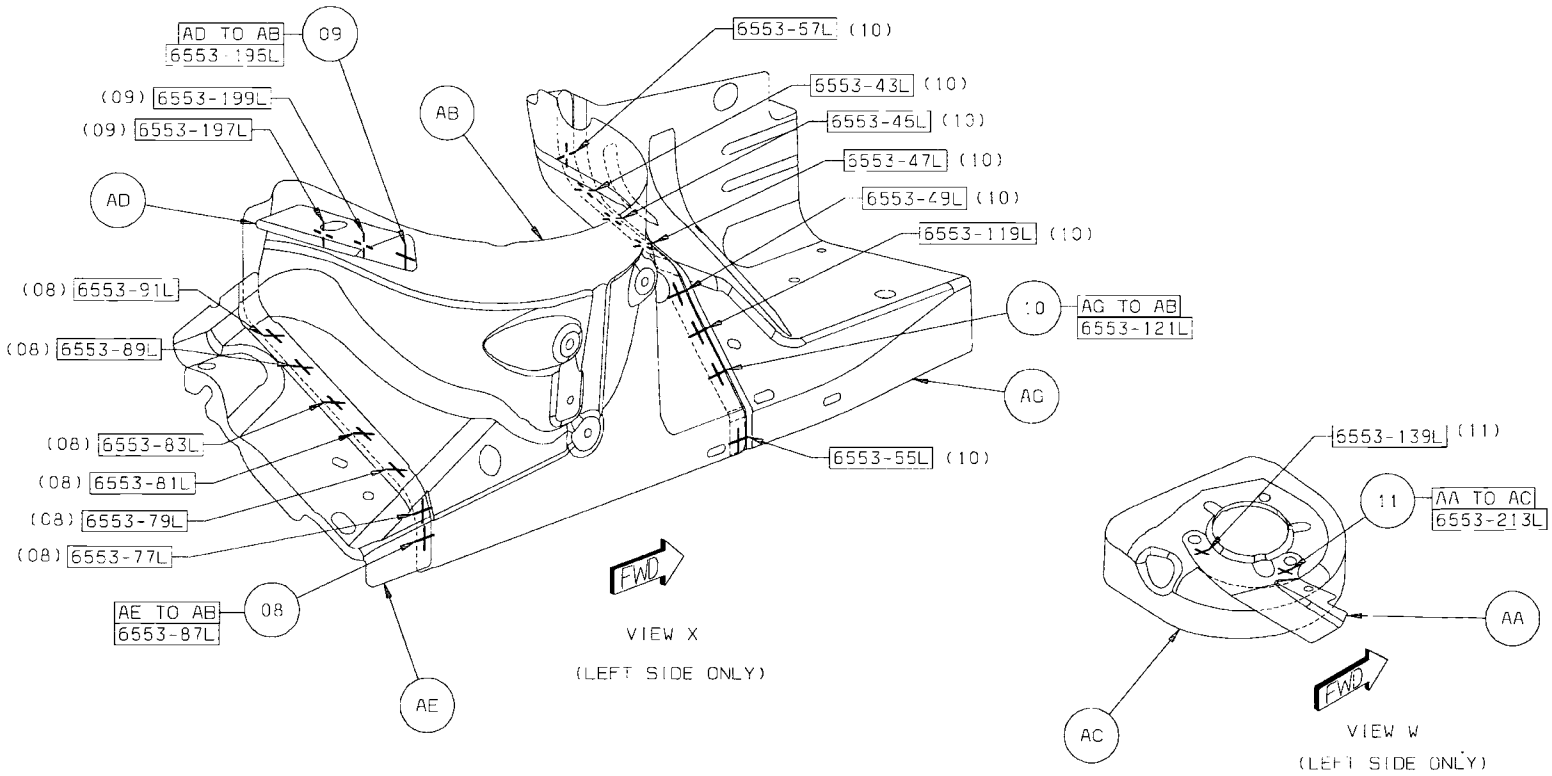

Back to Index

12 AJ TO AG 9L S/WELDS (ORD)
13 AF TO AC TO AB 2L S/WELDS (CRT)
14 AF TO AC TO AB 1L S/WELDS (ORD)
15 AF TO AB 11L S/WELDS (ORD)

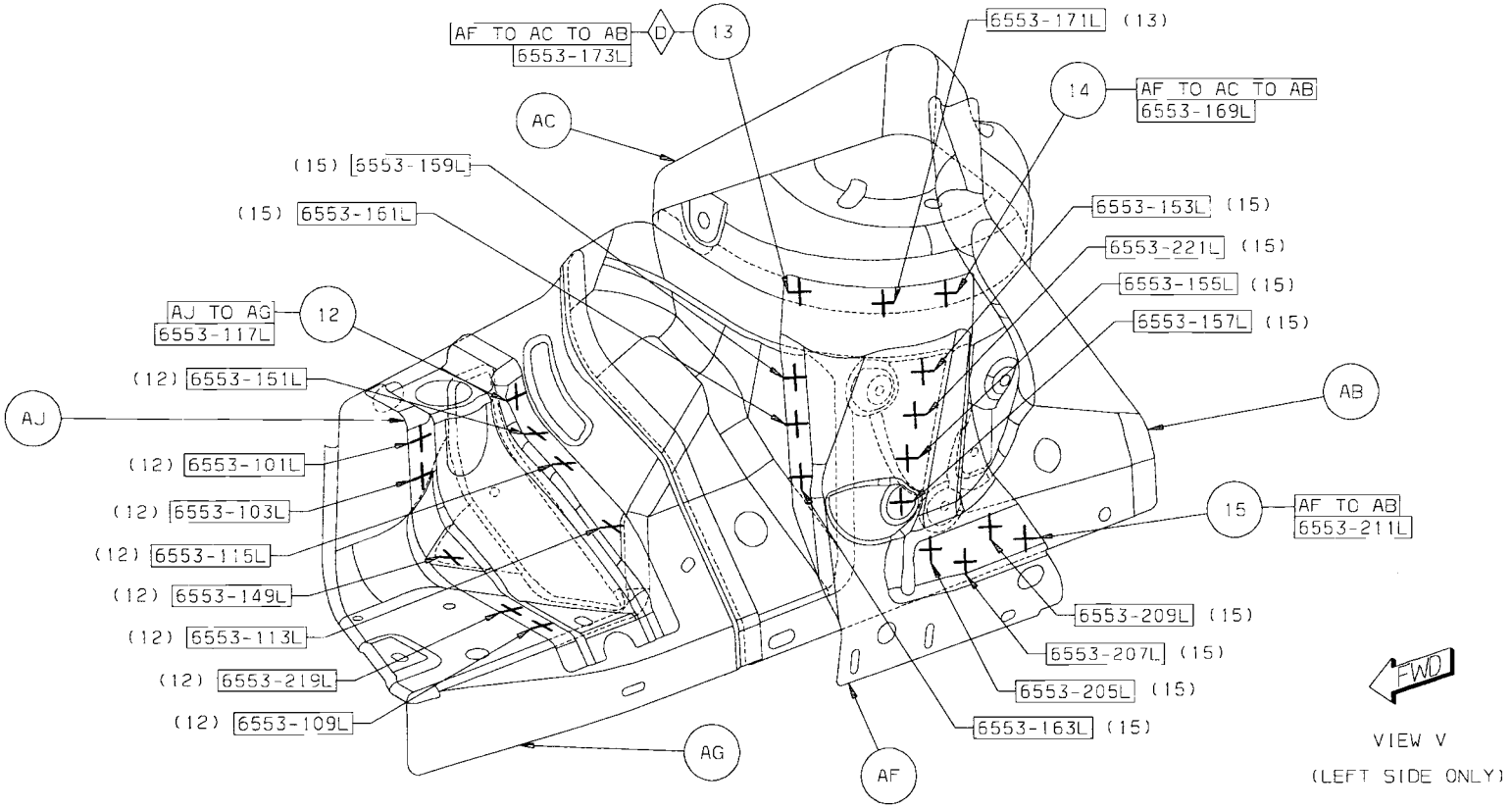

Back to Index

16 AC TO AB 14R S/WELDS (CRT)
17 AC TO AB 13L S/WELDS (CRT)
18 AK TO AB 2L S/WELDS (ORD)

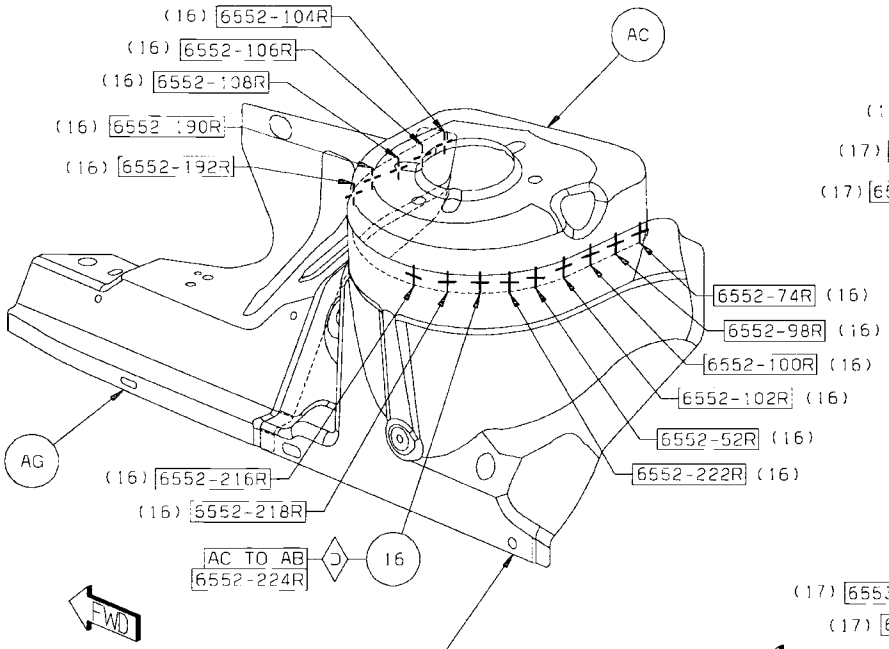

VIEW U
(RIGHT SIDE ONLY)

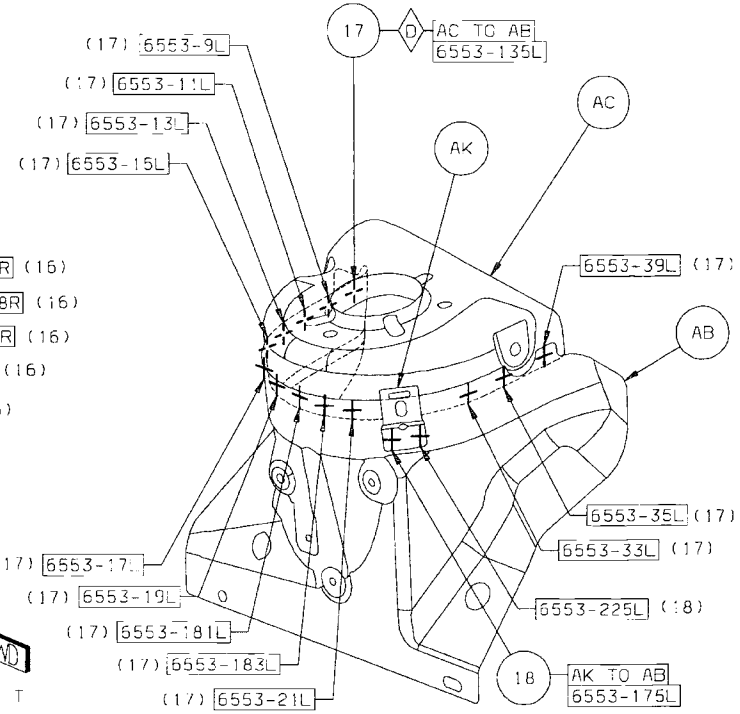

VIEW T
(LEFT SIDE ONLY)

Back to Index

19 AL TO AG TO AJ 1L S/WELD (ORD)
20 AL TO AG 2L S/WELDS (ORD)
21 AM TO AG 3R S/WELDS (ORD)
22 AN TO AM 1R PROJ WELD
23 AN TO AR 2R PROJ WELDS
24 AP TO AR 1R PROJ WELD
25 AR TO AB 4R S/WELDS (ORD)

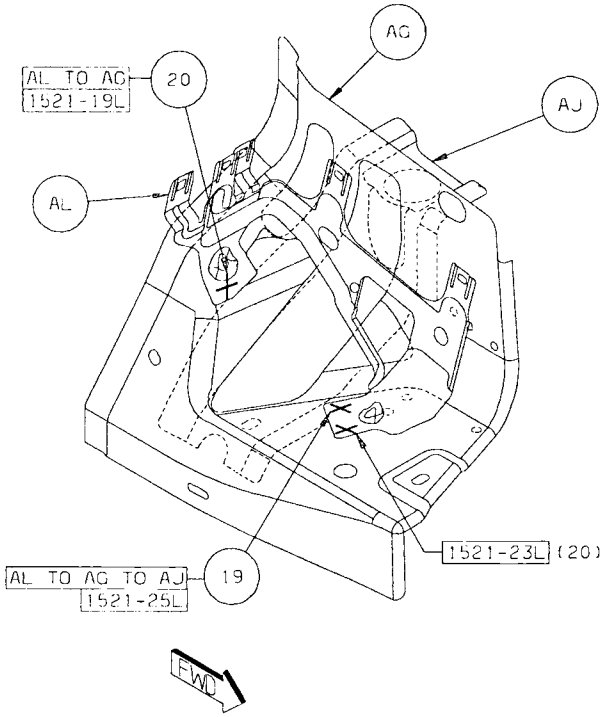

VIEW S
(LEFT SIDE ONLY)

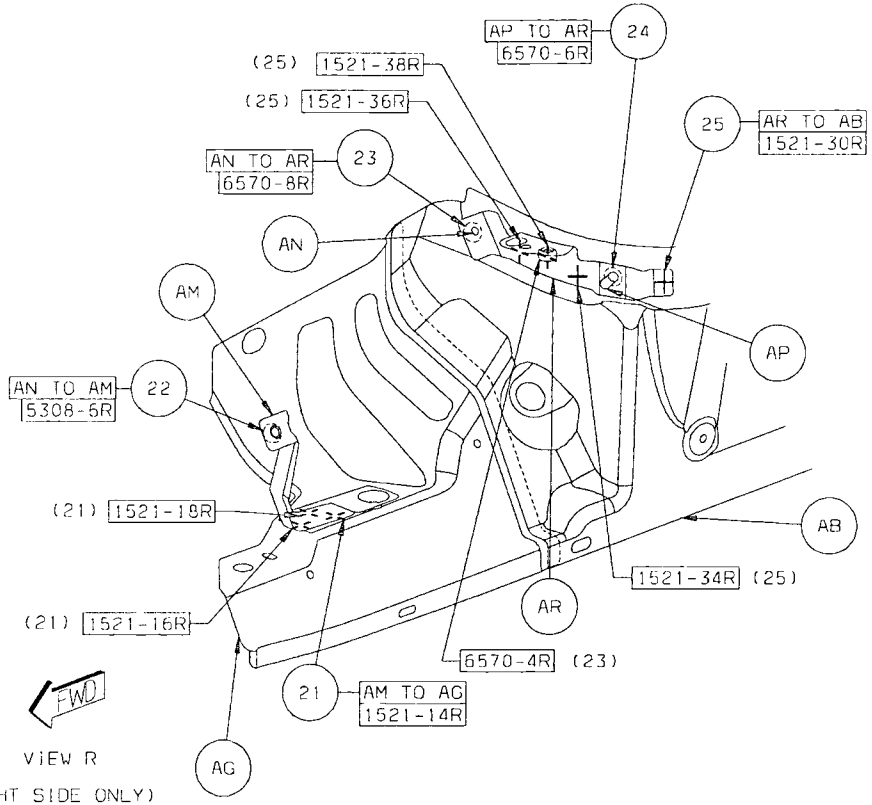

VIEW R
(RIGHT SIDE ONLY)

Back to Index

CHRYSLER SEBRING/DODGE AVENGER WHEELHOUSE (COMMON) SECTION

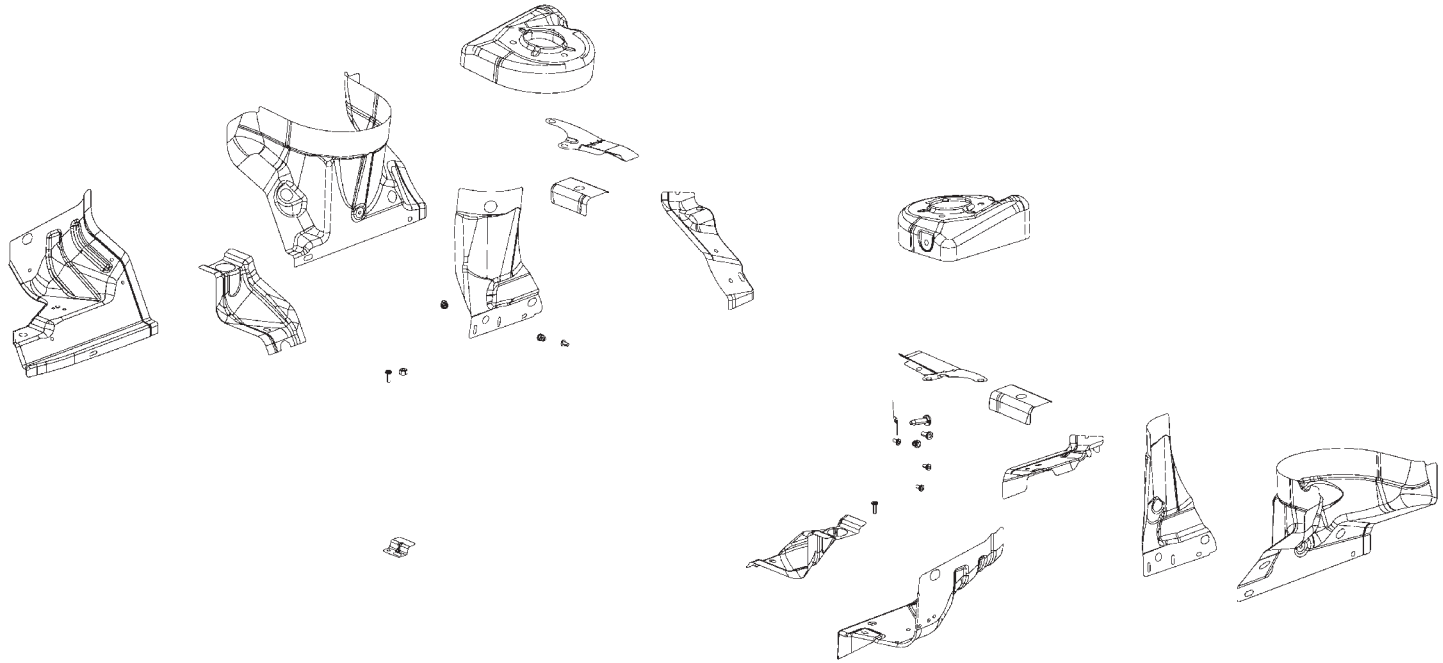

AA GUSSET – SHOCK –
AA GUSSET – SHOCK –
AB PANEL – SHOCK –
AB PANEL – SHOCK –
AC REINF – CAP –
AC REINF – CAP –
AD REINF – BRACE –
AD REINF – BRACE –
AE REINF – SHOCK TOWER MOUNTING FRT RT–
AE REINF – SHOCK TOWER MOUNTING FRT LT–
AF GUSSET – WHEELHOUSE –
AF GUSSET – WHEELHOUSE –
AG SHIELD – FENDER RT –
AG SHIELD – FENDER LT –
AH GUSSET – ENGINE MOUNT –
AJ GUSSET – TRANSMISSION –
AK BRACKET – BATTERY REMOTE POSITIVE START POST –
AL BRACKET – POWER MODULE –
AM BRACKET – COOLANT RECOVERY BOTTLE –
AN NUT/WELD.HEX – NIBS.NO.FIN.PILOT.PT – P/S RESERVOIR TO BODY
AN NUT/WELD.HEX – NIBS.NO.FIN.PILOT.PT – COOLANT BOTTLE TO BODY
AP STUD.WELD/INTERNAL – HEADER.PT.NIBS.NO.FIN – STABILITY MODULE
AR BRACKET – POWER STEERING RESERVOIR –

Back to Index

PARTS IDENTIFICATION LEGEND, OVERVIEW 2

AA GUSSET – SHOCK –
AA GUSSET – SHOCK –
AB PANEL – SHOCK –
AB PANEL – SHOCK –
AC REINF – CAP –
AC REINF – CAP –
AD REINF – BRACE –
AD REINF – BRACE –
AE REINF – SHOCK TOWER MOUNTING FRT RT–
AE REINF – SHOCK TOWER MOUNTING FRT LT–
AF GUSSET – WHEELHOUSE –
AF GUSSET – WHEELHOUSE –
AG SHIELD – FENDER RT –
AG SHIELD – FENDER LT –
AH GUSSET – ENGINE MOUNT –
AJ GUSSET – TRANSMISSION –
AK BRACKET – BATTERY REMOTE POSITIVE START POST –
AL BRACKET – POWER MODULE –
AM BRACKET – COOLANT RECOVERY BOTTLE –
AN NUT/WELD.HEX – NIBS.NO.FIN.PILOT.PT – P/S RESERVOIR TO BODY
AN NUT/WELD.HEX – NIBS.NO.FIN.PILOT.PT – COOLANT BOTTLE TO BODY
AP STUD.WELD/INTERNAL – HEADER.PT.NIBS.NO.FIN – STABILITY MODULE
AR BRACKET – POWER STEERING RESERVOIR –

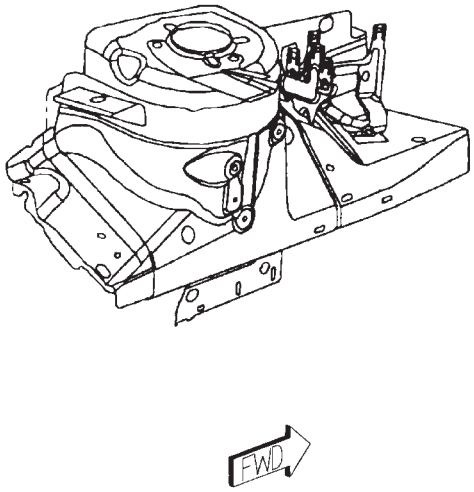

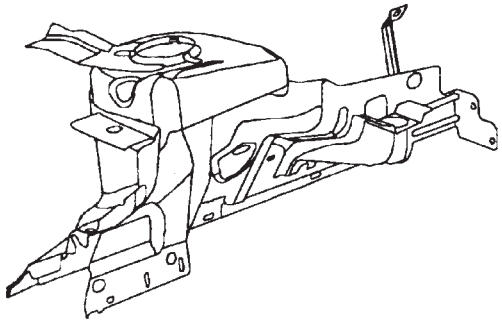

Back to Index

WELD LAYOUT LOCATION GUIDE

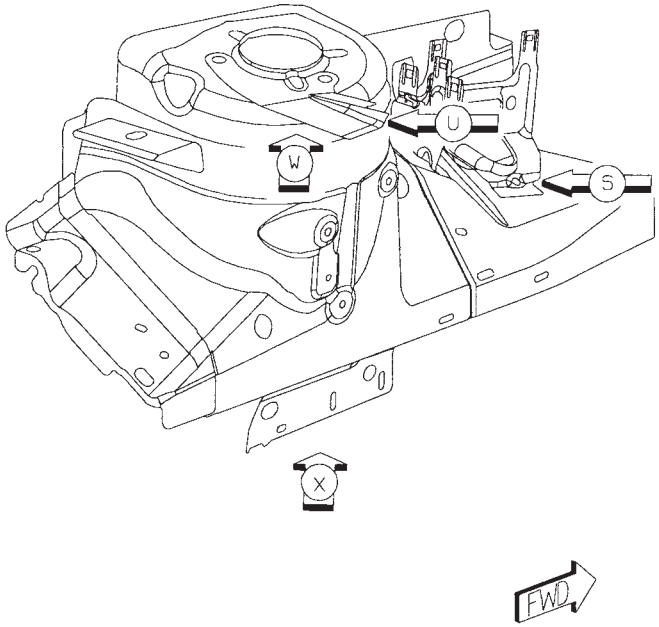

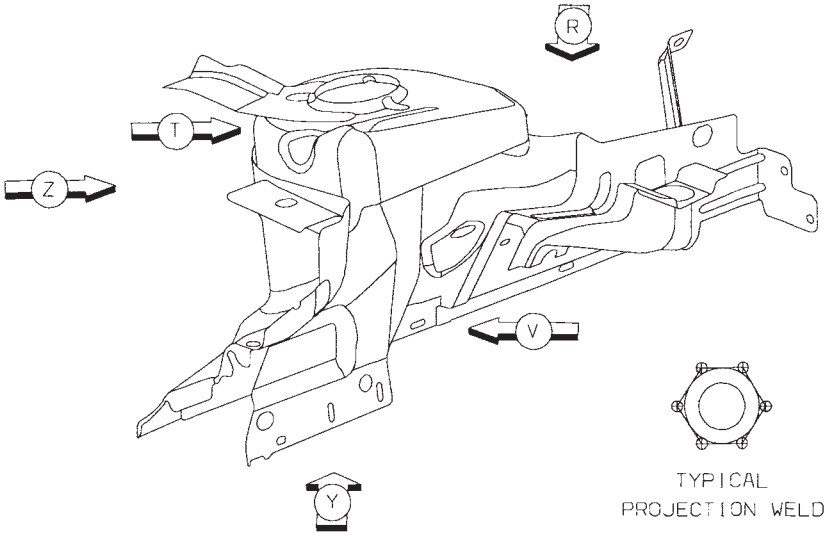

Back to Index

01 AA TO AC 2R S/WELDS (ORD)
02 AD TO AB 3R S/WELDS (CRT)
03 AE TO AB 8R S/WELDS (ORD)

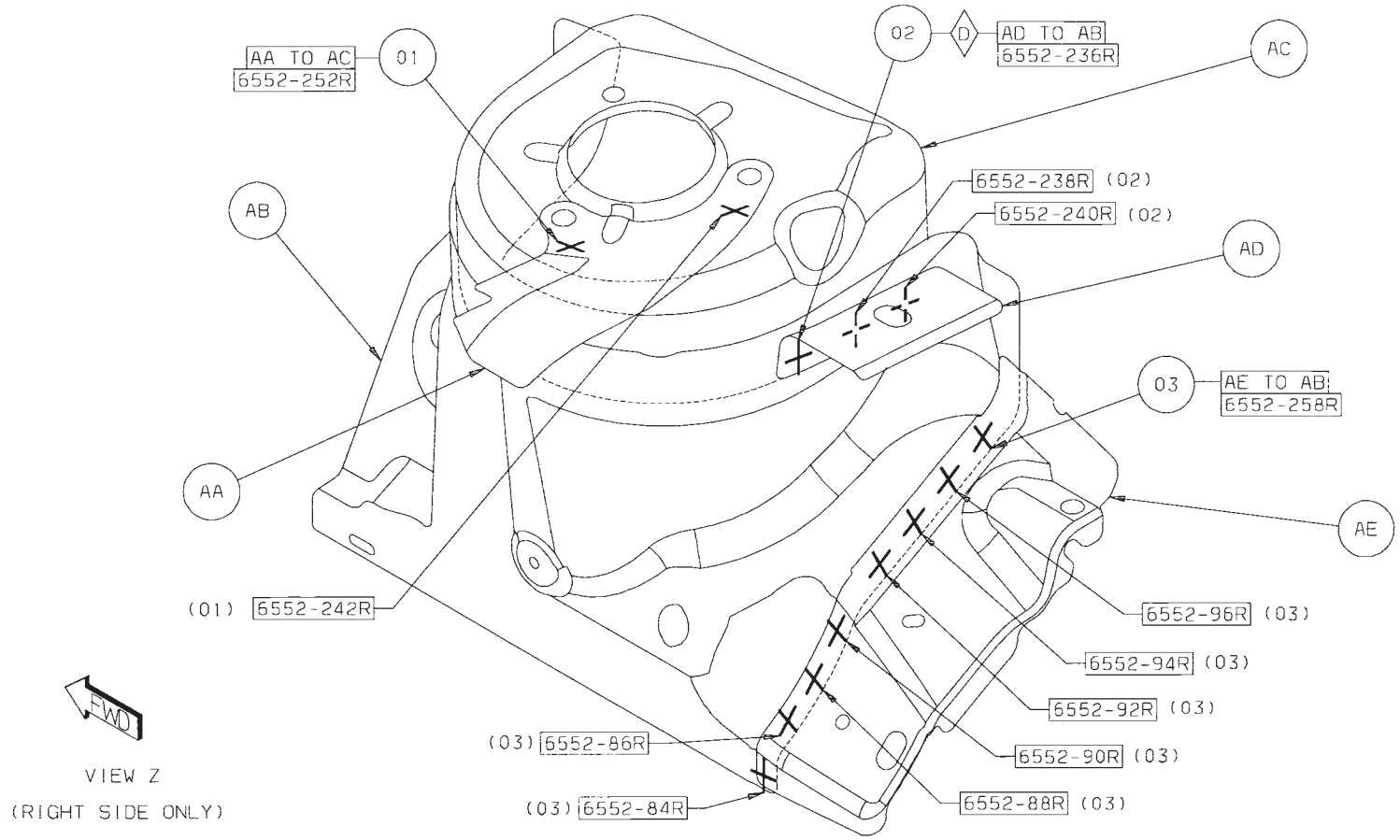

Back to Index

04 AG TO AB 9R S/WELDS (ORD)
05 AF TO AB 12R S/WELDS (ORD)
06 AF TO AC TO AB 3R S/WELDS (CRT)
07 AH TO AG 9R S/WELDS (ORD)

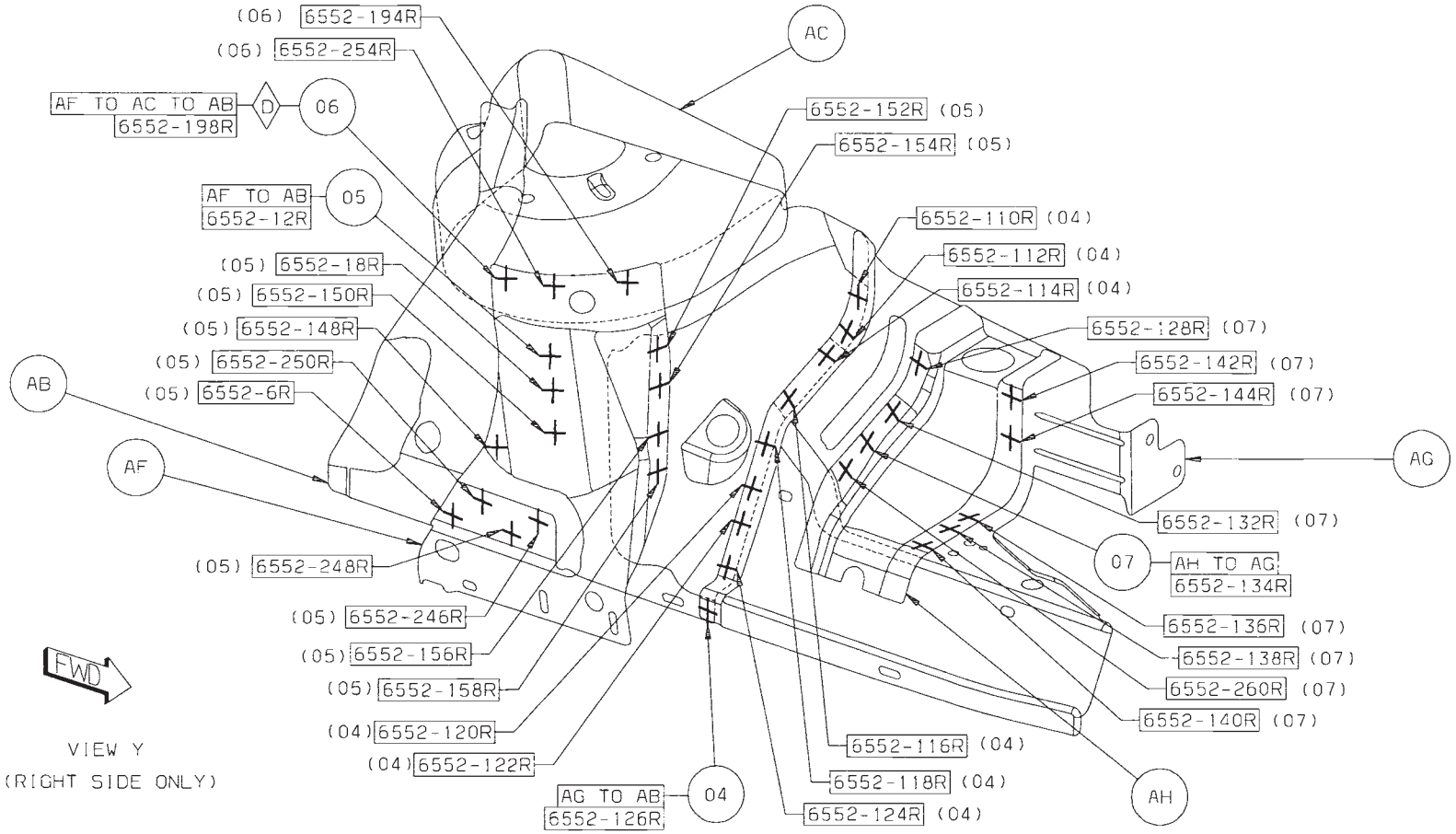

Back to Index

08 AE TO AB 7L S/WELDS (ORD)
09 AD TO AB 3L S/WELDS (ORD)
10 AG TO AB 8L S/WELDS (ORD)
11 AA TO AC 2L S/WELDS (ORD)

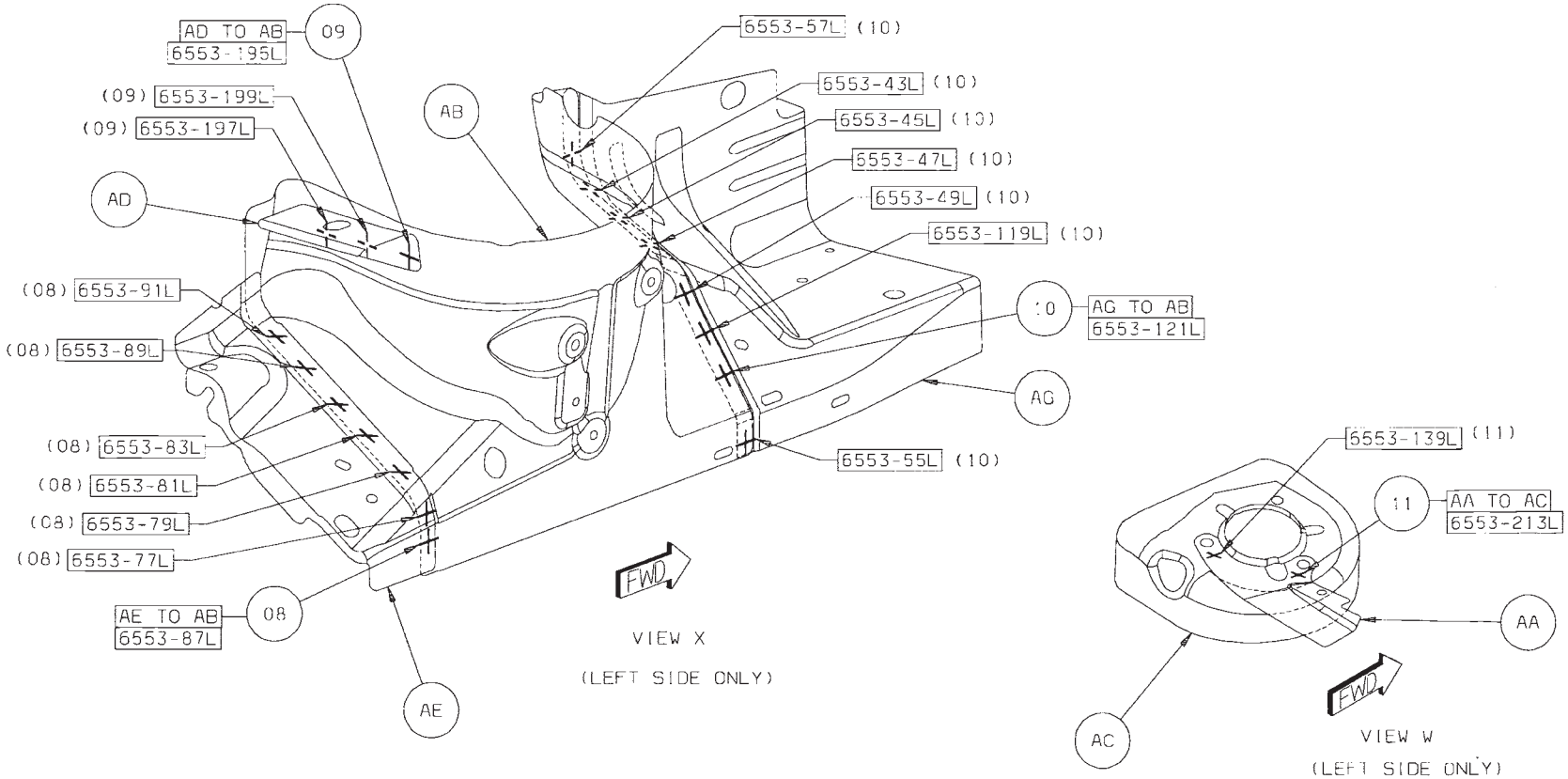

Back to Index

12 AJ TO AG 9L S/WELDS (ORD)
13 AF TO AC TO AB 2L S/WELDS (CRT)
14 AF TO AC TO AB 1L S/WELDS (ORD)
15 AF TO AB 11L S/WELDS (ORD)

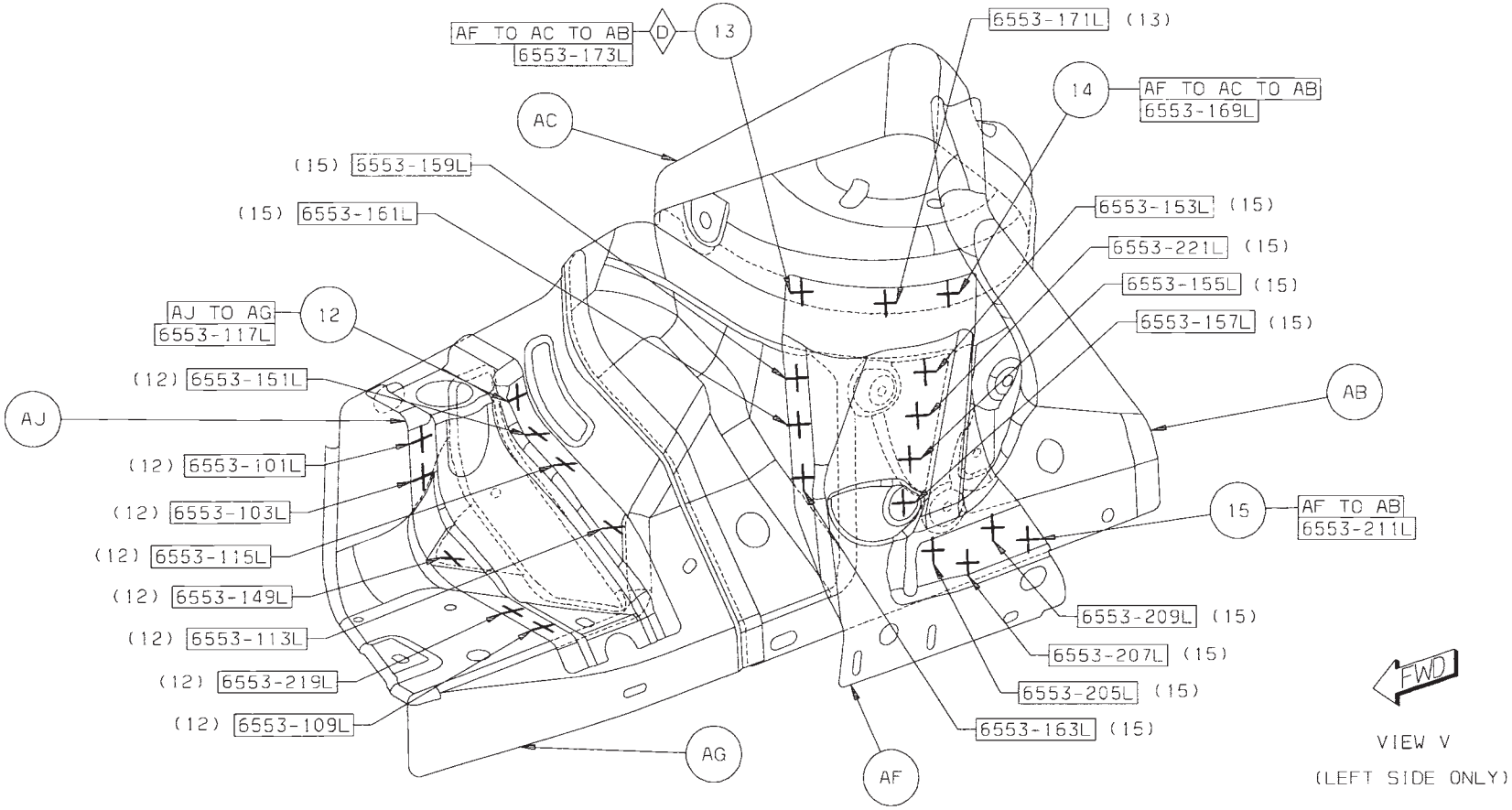

Back to Index

16 AC TO AB 14R S/WELDS (CRT)
17 AC TO AB 13L S/WELDS (CRT)
18 AK TO AB 2L S/WELDS (ORD)

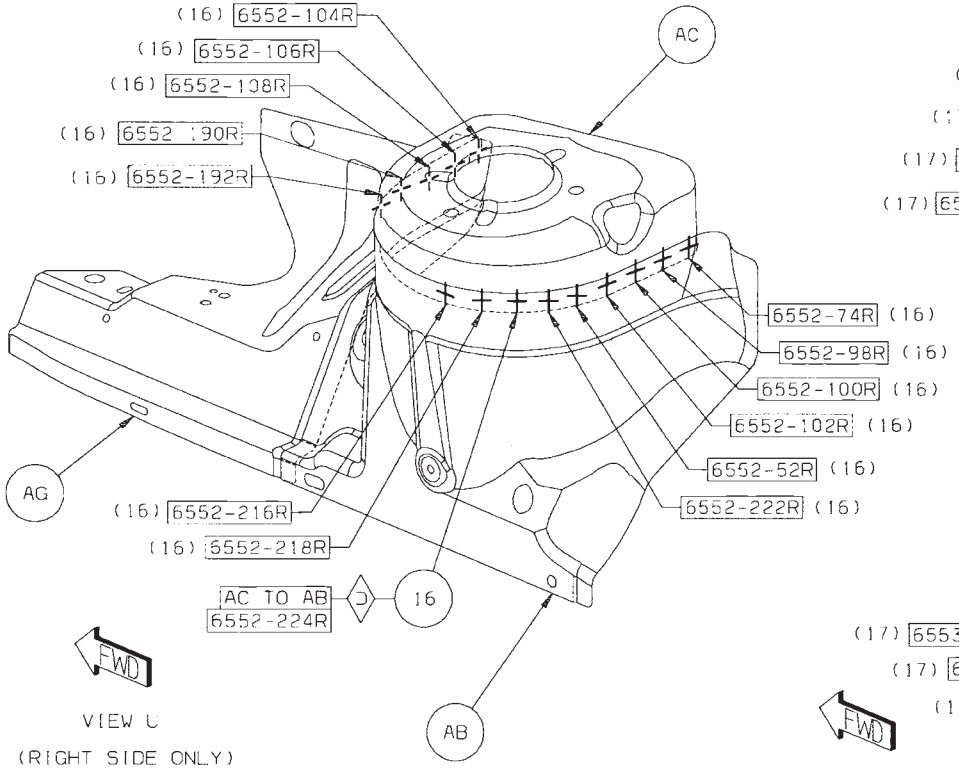

VIEW U
(RIGHT SIDE ONLY)

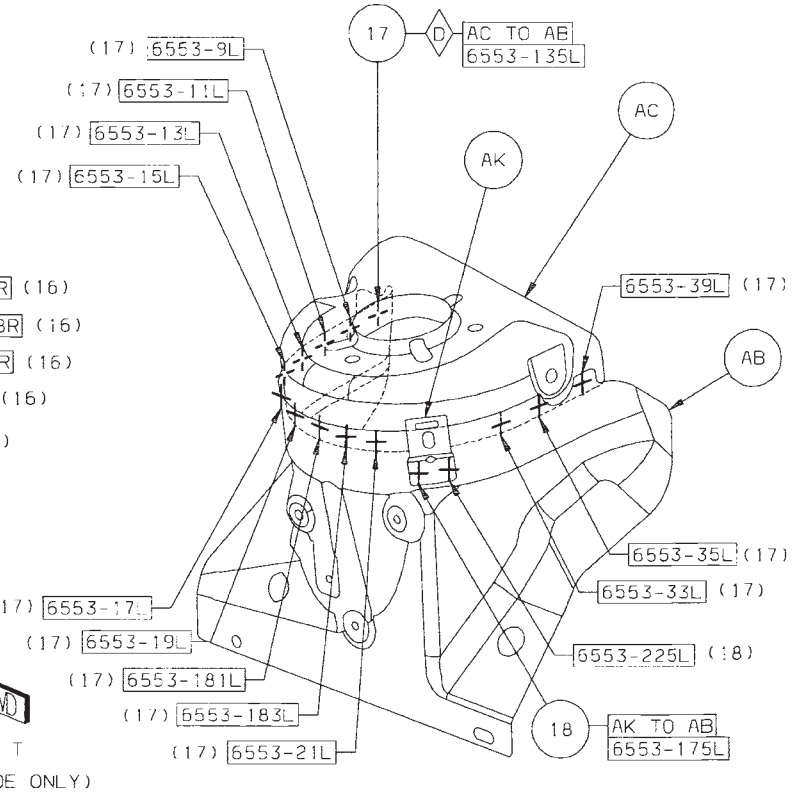

VIEW T
(LEFT SIDE ONLY)

Back to Index

19 AL TO AG TO AJ 1L S/WELD (ORD)
20 AL TO AG 2L S/WELDS (ORD)
21 AM TO AG 3R S/WELDS (ORD)
22 AN TO AM 1R PROJ WELD
23 AN TO AR 2R PROJ WELDS
24 AP TO AR 1R PROJ WELD
25 AR TO AB 4R S/WELDS (ORD)

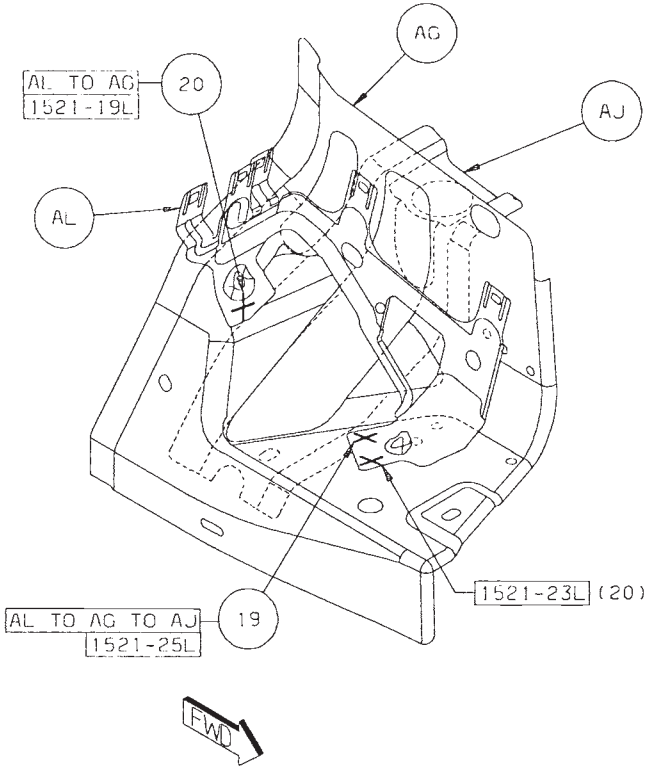

VIEW S
(LEFT SIDE ONLY)

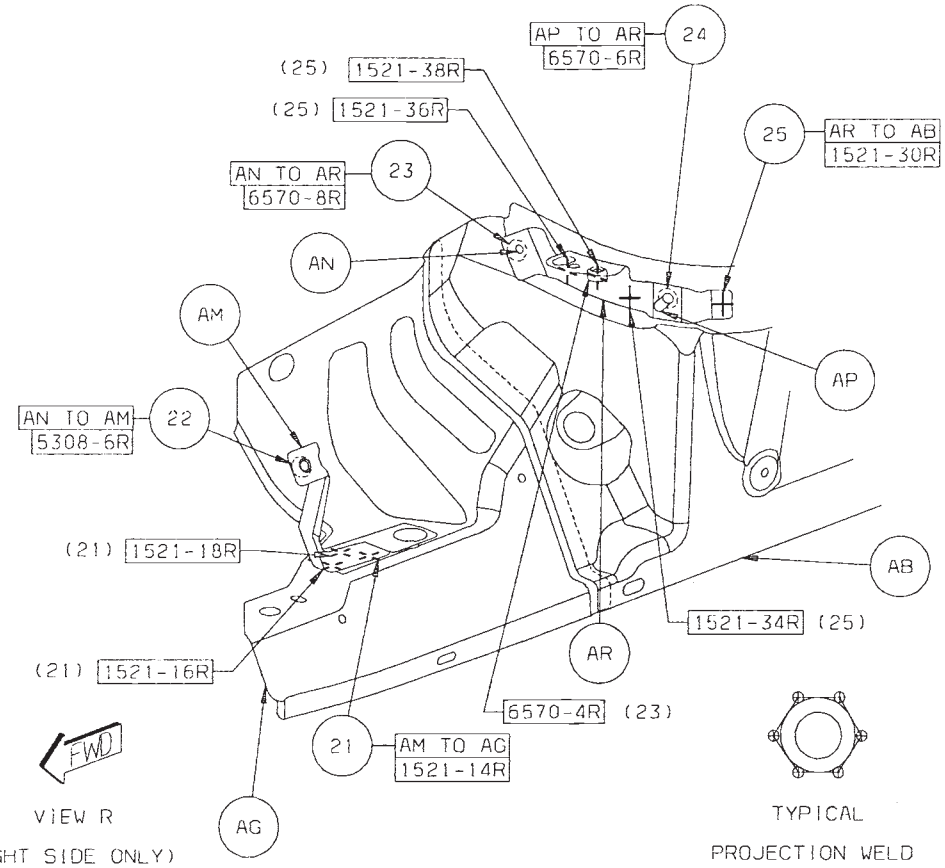

VIEW R
(RIGHT SIDE ONLY)

TYPICAL
PROJECTION WELD

Back to Index